The Anatomy of the Airplane

Darrol Stinton
Past Senior Visiting Fellow, Loughborough University of Technology, Leicestershire, UK

Second Edition

Co-published by: American Institute of Aeronautics and Astronautics, Inc.
1801 Alexander Bell Drive, Reston, VA 20191 and Blackwell Science Ltd, Osney Mead, Oxford, 0X2 OEL, UK
American Institute of Aeronautics and Astronautics, Inc. 1801 Alexander Bell Drive, Reston, VA 20191

THE AUTHOR

Darrol Stinton MBE, PhD, CEng, FRAeS, FRINA, MIMechE, RAF(Retd) was born in New Zealand and grew up in England. He is a qualified test pilot and aeronautical engineer who worked in the design offices of the Blackburn and De Havilland aircraft companies before joining the RAF. His test flying spanned 35 years and more than 340 types of aircraft, first as an experimental test pilot at Farnborough; then 20 years as airworthiness certification test pilot for the UK Civil Aviation Authority on light airplanes and seaplanes, before turning freelance.
He has lectured regularly at the Empire Test Pilots' School, Loughborough University, the Royal Aeronautical Society (of which he is a Past Vice President), and the Royal Institution of Naval Architects. His company specializes in cross-fertilization between aircraft and marine craft design and operation.

ALSO AVAILABLE
The Design of the Airplane Darrol Stinton 0-632-01 877-1
Flying Qualities and Flight Testing of the Airplane Darrol Stinton 1-56347-274-0

'If anyone tries to tell you something about an aeroplane which is so damn complicated that you can't understand it you can take it from me it's all balls.'
R. J. Mitchell (1895—1937)
Designer of the Supermarine Spitfire

Preface to the First Edition

One should never have too much reverence for ideas, no matter whose they are. Ideas are meant to be kicked around, stood upon their heads, and looked at backwards in mirrors. It is only in this way that they can grow up in the way that they should, without excessive self-importance. The ideas of one man are the food for thought of another. Perhaps Oliver Wendell Holmes had this in mind when he said something to the effect that: 'A man's mind stretched by a new idea can never go back to its original dimensions'. And that is the reason for this book.

The Anatomy of the Aeroplane was started in 1960 as a set of supplementary notes to the author's annual lectures on Aero-Structures given at the Empire Test Pilots' School, at Farnborough in Hampshire. The lectures were intended to give embryo test pilots an insight into the reasons for aircraft not being shaped in ways that fitted the often more elegant theories. In so doing the inherent capabilities and limitations of an aeroplane became more apparent. The capabilities and limitations were seen to be functions of specific requirements: those formalized statements of human needs that cause aircraft to be made as useful and as safe as possible within the 'state-of-the-art' at a given time. The seeming dichotomy of the two worlds of theory and practice — usually more apparent to the practical man than the academician — is resolved by looking at the development of an aircraft as a response to a set of requirements.

The aim of the book is to show students of aeronautics how requirements affect the application of theories, causing aeroplanes to be twisted, bent, cambered and kinked, to end up without the flowing perfection of their original, idealized, forms. It is aimed in particular at students in developing countries who, the author has found, are bursting with the desire to learn and assert their own ideas, but who cannot yet gain the practice they require. To this end a number of specialized subjects are introduced and shown in relation to the end product of the finished aeroplane. In this way the student will be able to specialize later with some idea of where his own subject fits into the whole.

The treatment of the subject is such that the reader should be able to reason for himself why every salient feature of any aeroplane is shaped as it is. In doing this the book will probably make some enemies among those who cherish a professional mystique behind which to hide. That does not matter, for the book will have served its purpose if only one student gets a better feel for his subject than he might otherwise have had.

The word aeroplane is used throughout in preference to airplane, or the meaningless plane, for two reasons. The first is that it is a scholarly word applied to a particular order of a class of aircraft. The second is that it derives from two Greek words meaning, literally, airwandering. That is excellent, for the word touches in part upon the spirit of aeronautics and the impulse to wander in the air that made men want to fly in the first place. The *Concise Oxford Dictionary* describes an aeroplane as a 'mechanically-driven heavier-than-air flying-machine'. Taking the definition further: the Glossary of Aeronautical Terms of the British Standards Institution defines an aeroplane as 'a power-driven heavier-than-air aircraft with supporting surfaces fixed for flight'. The name includes landplanes, seaplanes (float-seaplanes and flying boats), and amphibians (float-amphibians and boat-amphibians).

Unfortunately, precise definitions of this kind miss out the most beautiful of all winged machines, that comes nearer to wandering-in-the-air than any other: the sailplane. For the purposes of this book the definition will treat an aeroplane as a heavier-than-air flying-machine with fixed wings (i.e. wings that do not beat the air as a means of propulsion, although they may be moved fore and aft in flight) while avoiding any need to specify the means of propulsion. There is no great inconsistency in doing so, for the first aeroplanes grew from kites and gliders, and the sailplane is a highly refined glider.

The evolution of powered aeroplanes is such that they outstrip the definition. Since sustained flight became a possibility, little more than half a century ago, the performance of the aeroplane has increased more than one hundred fold. Cruising speeds and heights, range and endurance, carrying capacity and weight (and complication) have all increased. In order to fly fast smaller wings are used to achieve optimum efficiency, but smaller wings bearing heavier loads require more space for take-off and landing, and space is at a premium. This has led, under pressure of military necessity, to the development of short and vertical take-off, STOL and VTOL aeroplanes. We may not like to recognize it, but most significant advances are brought about through military necessity. And now there are dreams of aeroplanes employing powered lift throughout the whole envelope of flight, for cruising as well as for take-off and landing.

The scope of the book is broad. Essentially it is a physical textbook, written in five parts, with a number of additional appendices. These have been added in order to focus attention upon some specific areas of operation: supersonic transports, aero-buses, strike and reconnaissance aeroplanes of various kinds. As far as possible early project aeroplanes have been used as illustrations, for these show most clearly the first thoughts of designers, with little adulteration. Many of the aircraft shown are really in the form of feasibility studies — the stage before becoming a project, in which a particular way of doing a job is investigated to see if it is worth continuing with as a project.

Mathematical statements are simple, amounting to little more than 1 + 1 = 2, or 3 = 6/2, and using symbols to say so. Although British symbols are used these are defined, and repeated where relevant, so that the foreign reader should have no difficulty in converting them to the standard symbols of his own country. Equations are, for the most part, unit-less —although the ft-lb-sec system is used where stated. The reason for avoiding units is that the ideas count more than quantitative results, which belong properly in a handbook of aircraft design. Some basic calculus symbols are used, but it is only necessary to know what is meant by Δx and dx when they appear.

A significant departure from standard works on aerodynamics is that to explain the nature of aerodynamic phenomena and forces aeroplanes are considered in motion through the air, instead of the usual reverse. There is plenty of time for the reader to come round to the conservative point of view, of visualizing an aircraft somehow motionless in space, with air flowing past it. This view has been deliberately rejected, not only because aeroplanes do not fly that way, but because certain concepts — like circulation, and its effect upon aerodynamic forces — are more readily understandable if one goes straight to the point of trying to see what really happens to the air. Furthermore, stability and control (neither of which are easily mastered if one is not happy with textbook mathematics) become simpler when seen as the pilot sees them: as properties of a machine that, under his hands, seems to be alive as it moves through apparently living air.

The author is indebted to a large number of people who, directly and indirectly, have either helped by providing material, or have helped with the play of ideas thrown up as the book was written. Among these are three test pilots: Wing Commander N. F. Harrison DSO, AFC, RAF, Don Wright, and Squadron Leader G. M. Morrison, RAF. Others are Ernest Stott, the artist: Squadron Leader J. H. Maguire, MBE, RAF, Charles Gibbs-Smith (who provided the copy of the Sir George Cayley medallion), Derek Dempster, Alastair Pugh, Dr M. H. L. Waters, W. T. Gunston, W. W. Coles, and D. Howe of the College of Aeronautics. Thanks are also due to the Blackburn and De Havilland Divisions of Hawker Siddeley Aviation Ltd, Bristol Siddeley Engines Ltd, the British Aircraft Corporation, Short Brothers and Harland Ltd, The Royal Aeronautical Society, Air et Cosmos, Flight International, Interavia, Shell Aviation News, and the Air Registration Board.

It should be noted that the views expressed are those of the author. The book does not reflect any policy or opinion of either Her Majesty's Government or the Royal Air Force.

Darrol Stinton
Mattingley, 1966

Preface to the Second Edition

Since 1966, when this book — which became known widely as *The Anatomy* — was first published, developments and changes in the world of aviation have been vast. Most significantly the Cold War has ended, empires have crumbled, the shapes and centers of gravity of states have shifted. Former large and important aircraft companies, synonymous with past progress and national survival, have merged with or been devoured by newly formed international and other conglomerates.

Famous family names have disappeared. Political and industrial change has brought new possibilities, the effects of which, both favorable and adverse, can only be guessed. In the UK the Royal Aircraft Establishment at Farnborough, which served both military and civil contractors, is no more. It has been replaced by the Defence Evaluation Research Agency (DERA).

The once supreme pair of airworthiness authorities — in 1966 the Air Registration Board (ARB) in the UK (which became the Civil Aviation Authority (CAA) early in the 1970s) and the Federal Aviation Administration (FAA) in the USA — have been joined by the complex European Joint Aviation Authorities (JAA), of which the CAA is now part. Authorities elsewhere, in Canada and Australia for example, take national initiatives with consequences on a world scale of utmost importance for operators, manufacturers of engines and airframes, which cannot be ignored by the JAA, CAA and the FAA.

Among outstanding civil successes are three of many. The first has been that of the Anglo— French Concorde which in the first edition was only an elegant shape. Now, just as elegant as any current project, and in spite of back-biting and lightweight criticism, it has been in safe service for more than 20 years, with no end to its operational life in sight as this is written. Second is that men and women have flown into Earth orbit, worked in space, and returned in the Shuttle — a powered aeroplane outbound and a dead-stick glider inbound. Third is the round-the-world non-stop flight of Burt Rutan’s canard and twin-boom Voyager, cruising on its rear engine and crewed by co-builders, Dick Rutan and Jeana Yeager. Other developments include successful man-powered flight.

That is not the end of it, because there is now the powerful microlight aeroplane movement; and the *parapente* (French — a para-glider inflated wing with a lightweight motor); and massive homebuilt aircraft movement which experiments with man-made materials, and new types. Within that movement people like Burt Rutan and Jim Bede have been a moving force. The air is now within reach of the individual as never before.

The historic, classic and vintage aircraft movements thrive in Europe, America and Australasia, with air-shows coming second only to football as the most popular spectator sport.

Civil aeroplanes have grown in size with the trend towards fewer and larger turbofan engines, even for long-haul operations, instead of three or four smaller turbojets or turbofans. The turboprop — a tiny jewel of a gas-generating jet engine turning a propeller — is now used more commonly where the piston propeller engine once reigned supreme. Turboprops are super-reliable high cost units compared with piston-propeller engines. Reliability and high cost force operators and manufacturers to argue seriously the case for public transport certification by the airworthiness authorities of relatively large aircraft containing nine, ten, or more people, hauled behind a single turboprop. There are arguments on both sides, but it looks like the authorities will yield to urging from the market place.

On the military scene, while the heavy V-bomber conversion, together with converted airliners, remains relevant as a tanker for in-flight refueling, the age of the 'smart’, the ‘fire-and-forget’ projectile, bomb and mine is with us. One relatively small bomb, placed with pinpoint accuracy by laser target-marking, delivered by a two-seat aeroplane no larger than a jetfighter, can today do at least as much to neutralize an enemy as 1000 bombers, propelled by 4000 piston-propeller engines and manned by 10000 aircrew in 1944. Couple this with in-flight refueling over continental ranges and a small aeroplane, once regarded as tactical, can deliver a strategic punch.

Powered (jet) lift, still in operational infancy 30 years ago, had revitalized the aircraft carrier. First came vertical take-off and landing (VTOL). Now, using conventional runways, or modified flight decks on warships no larger than light cruisers or large destroyers of World War II, one may create agile, stealthy aeroplanes with thrust vectoring, which further combine heavier load-carrying with short take-off and vertical landing (STOVL).

The technology of flying controls has changed everything. We use the term 'high-order’ (advanced) flying controls, meaning those which employ fly-by-wire, or fly-by-light, using fiber optics and 'active controls’ (constantly moving) to replace stability. Such controls rely upon one or more computers, interposed between the pilot and the aircraft. They are expensive, special-purpose systems, not found on light or other subsonic aircraft.

Fresh concepts abound and there are new terms to describe applications of older physics in the main

text, and in the appendices: stealth, radar-absorbent materials and uses of shape; small, regional/commuter and business aeroplanes, with discussion of handling and commercial disadvantages; utility and freight (cargo) carriers, and arguments for single vs twin engine, coupled engines and contra-props; post-aero-bus developments; design for emergency evacuation; trends with long-haul aeroplanes; SST research for the 21st Century, and current research with slewed (yawed) wings; military design for agility and stealth; the fate of the TSR.2 and a review of its lost potential; aircraft designed for wide speed-range, VSTOL and STOVL; ram-wing and ekranoplan (Russian), designed to utilize ground effect, and their commercial possibilities; AeroShip, a heavy-lift delta wing for disaster relief, with an on-board field hospital; nuclear propulsion and uses of solar energy to provide unlimited range.

Out of these other subjects arise: use of the air for an attempt upon the water-speed record, ablation of surfaces and cavitation; supercritical aerofoil sections; the electromagnetic spectrum, ionization, radio-interference and blackout; comparison between single, canard, tandem and three aerofoil-surface configurations; the combination of aerodynamic and aerostatic lift within one airframe; solar energy, nuclear propulsion, and use of liquid hydrogen (LH_2) as a fuel in place of hydrocarbons; turbofan and propfan engines; glass cockpits; powered lift and thrust-vectoring; elimination of tail-surfaces, replacing them with thrust-vectoring and artificial control and stability; super-maneuverability; structures using carbon-fiber and glass-reinforced plastics.

Appendices which included design projects intended for criticism were praised in reviews of the first edition. In this second edition the appendices have been updated and extended. As before, there is meat enough to foster and stimulate criticism, while deliberately hanging in the air is the unstated question: ‘OK, then show us how you would have done it better?’

As the French-born Octave Chanute, later to be a valuable advisor to the Wright Brothers, said in 1870: ‘I have always thought that aviation would never be the invention of a single person. I never patented anything and I published all my designs so that they could be useful to others.’

Chanute’s philosophy is important today, when engineers and technicians, insulated from the real world of machinery which often goes wrong, fiddle around on computers with images which look convincing, but which just as often are inadequate when built and flown. This book encourages you to learn from the work of others, and to be critical above all.

The author has never tested an aeroplane that was not flawed, sometimes severely. It would be tempting to use existing aircraft as illustrations, for criticism or praise, but the first would be unethical without knowledge of what was in the designer’s mind at the time. Praise would be mere advertising, and of little value to students of design. Instead, as many examples as possible have been included which are projects with which the author has been closely involved, in project design, as an aero-marine consultant, or generalized in 35 years experience as a qualified test pilot. Their purpose is to be pulled apart to reveal the good and the bad.

Finally we are now faced with the incredible length of service life which can be achieved by an aircraft of one type. Often, in place of new prototypes are aeroplanes which have been stretched and added to. One case in point is the De Havilland Comet, the first jet airliner anywhere, the prototype of which flew in 1949. Its buried wing-root jet engines were at first rejected by other designers, in place of the podded wing-mounted units favored by the Americans. However, over the intervening half-century the Comet was metamorphosed through the Royal Aircraft Establishment at Farnborough as an experimental test-rig. Its shape further evolved into the maritime reconnaissance backbone of the RAF, growing a deep weapon-bay and an array of electronic intelligence equipment, radar and, through several variants, into the glass-cockpit Nimrod 2000, which is expected to serve well into the 2020s. The buried engines are still there, as turbofans, their mounting within the wing roots provides a degree of stealth, impossible with podded units. If it serves out its life as planned it will then be 80 years since the basic Comet was first sketched on a table cloth — or so the legend has it.

In the early 1960s the author was one of the experimental test pilots at Farnborough whose reports contributed to the American McDonnell Douglas F-4 Phantom entering service with the Royal Air Force. A quarter of a century later his eldest son was flying them operationally in the Falklands: a time-span akin to taking an aeroplane into service in 1915 and flying it in combat in the Battle of Britain in 1940. One consequence of such longevity is that there are teams working in airframe and engine design offices of various manufacturers who might never see anything they have designed actually fly.

Do not be discouraged though. There is work to be done by use of the air, un-thought of previously. It is a time of consolidation and adaptation. Operationally, the world is bigger and more complex than ever before. That such size and complexity exist is the best justification for this book, and the second and third which followed — the *Design of the Aeroplane* (1983) and *Flying Qualities and Flight Testing of the Aeroplane* (1996) — making this the first of a trilogy.

All three books are a practical consequence of cross-fertilization between design, operations, test flying and, years ago, the author leaving his milk-teeth on the factory floor during World War II, as an apprentice in aeronautical engineering. In short, as far as the eye can see into the next millennium, there are broad new

fields opening and waiting to be explored by you, and others like you, in our use of the air for more than simply breathing, burning and polluting.

Darrol Stinton
Farnham, 1997

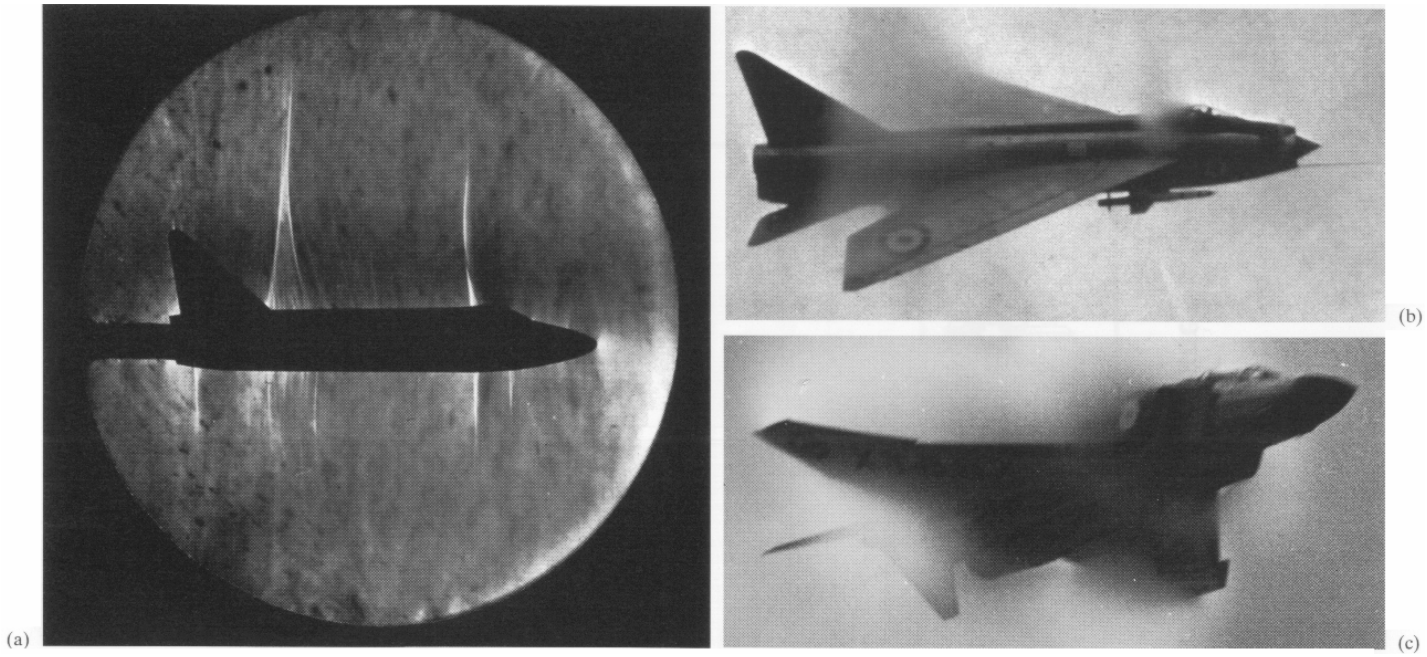

Theory and practice. Schlieren photo of wind tunnel model of a Lightning (a), and a Lightning (b) and a Phantom (c) of the RAF, showing similar effects of shock wave formation in moist air

List of Symbols

Symbol	Meaning	Symbol	Meaning
A	Aerodynamic aspect ratio (b^2/S)	c_d	Section drag coefficient
A	Cross-sectional area of a cylinder of air	c_l	Section lift coefficient
		c_m	Section moment coefficient
A	Cross-sectional area of a stream-tube	c_t	Equivalent tip chord
		c'	Thrust specific fuel consumption
A	Moment of inertia about longitudinal (rolling) axis OX	$\bar{c}$	Geometric mean chord of wing
		$\bar{\bar{c}}$	Aerodynamic mean chord of wing (practically $\bar{c}$)
A_S	Structural aspect ratio ($b^2 \sec^2 \Lambda/S$)		
A_ω	Total wetted area of airframe	D	Total drag of aircraft
a	Acceleration along flight path	D_F	Zero-lift drag
a	Cross-sectional area of material specimen	D_L	Lift-dependent drag
		D_{fric}	Total frictional drag (sensibly D_F in subcritical flight)
a	Unspecified constant of proportionality	D_{pod}	Pod drag
a	Velocity of sound	D_{press}	Total pressure drag
$a_1, a_2 \ldots$	Slopes of lift curves $(\mathrm{d}C_L/\mathrm{d}\alpha)_1$, etc.	E_h	Total energy at a given speed and height
ac	Aerodynamic centre		
B	Moment of inertia in pitch about axis OY	e_c	Compressive (bearing) strain
		e_t	Tensile strain
b	Wing span	F	Fahrenheit
C	Centigrade	F	Net propulsive force
C	Moment of inertia in yaw about axis OZ	F_e	Static sea level thrust per engine
		f	Equivalent parasite area of aircraft
C	Total fuel consumption	$f(\ )$	Some unspecified function
C_D	Total drag coefficient ($D = C_D qS$)	g	Gravitational acceleration 32·2 ft/sec^2
C_{DF}	Zero-lift drag coefficient		
C_{DL}	Lift-dependent drag coefficient (induced or vortex drag in subcritical flight)	h	Height above mean sea level
		h_e	Energy height ($h = V^2/2g$)
		I	Moment of inertia Mk^2
$C_{D\text{fric}}$	Frictional drag coefficient (sensibly C_{DF} in subcritical flight)	K	Factor of planform efficiency (or 'inefficiency')
$C_{D\text{min}}$	Minimum drag coefficient	K	Factor of principal tensile stress
C_L	Lift coefficient of complete aircraft $L = C_L qS$	K_s	Factor of take-off distance
		k	Radius of gyration
$C_{L\text{max}}$	Maximum lift coefficient	k	Unspecified constant of proportionality
C_{Lto}	Take-off lift coefficient		
C_M	Pitching moment coefficient $M = C_M qS\bar{c}$	L	Total lift
		L	Specified distance to applied load
C_{Mac}	Pitching moment coefficient about aerodynamic centre	L_F	Part of total lift supporting weight of fuselage
C_{Mcg}	Pitching moment coefficient about centre of gravity	(L/D)	Lift/drag, the measure of aerodynamic efficiency
CG	Centre of gravity	$(L/D)_{\text{max}}$	Maximum lift/drag
c	Chord of aerofoil section	$(L/D)_R$	Optimum range lift/drag (about 0·94 $(L/D)_{\text{max}}$)
c_c	Equivalent centre-line chord		

Symbol	Meaning	Symbol	Meaning
l	Aerofoil section lift	R_N	Reynolds number (Vc/ν)
l	Overall length of aircraft	$R_1, R_2, R_3 \ldots$	Component probable reliabilities
l_f	Fin plus rudder moment arm	r	Radius of rotation
l_t	Tailplane and elevator moment arm	S	Wing area
		S_T	Horizontal tail area
l_η	Elevator moment arm	s	Semi-span of aerofoil ($b/2$)
l_ζ	Rudder moment arm	T	Absolute temperature (degrees Kelvin)
l_ξ	Aileron moment arm		
M	Mach number	T	Torque
M	Metacentre	T_w	Torque applied at wing root
M_{crit}	Critical Mach number	t	Maximum thickness of aerofoil section
M_{critD}	Critical Mach number where wave drag becomes 'measurable'	(t/c)	Thickness ratio of aerofoil section
M	Bending and fixing moment		
M	Total (unspecified) pitching moment	V	Relative velocity of airflow
		V	True airspeed, TAS
M_w	Bending moment applied at wing root	V_A	Design manoeuvring speed
		V_B	Design speed for maximum gust intensity
M_{ac}	Pitching moment about aerodynamic centre	V_C	Design cruising speed
M_{CG}	Pitching moment about centre of gravity	V_D	Design diving speed
		V_J	Jet velocity
M_0	Pitching moment at zero lift	V_L	Relative velocity of airflow over lower surface of aerofoil
M_x	Bending moment at station x		
M_a	Mass of air (W_a/g) acted on per second by engine	V_U	Relative velocity of airflow over upper surface of aerofoil
N	Number of alternating load cycles per second	V_{AB}	Resultant velocity of circulation of two particles A and B
N_e	Number of engines	V_{US}	Unstick speed of seaplane
N_p	Number of passengers	V_a	Aquaplaning speed
n	Normal acceleration (in units of g) = aeronautical load factor	V_i	Equivalent airspeed, EAS
		V_1, V_2	Different TAS
$n_1, n_2, \ldots$	Different values of n	$\bar{V}$	Tailplane plus elevator volume coefficient
P	Applied force		
P	Brake horsepower of engine	$\bar{V}_f$	Fin plus rudder volume coefficient
P	Productivity	$\bar{V}_\eta$	Elevator volume coefficient
P_e	Power required for flight (ft-lb-sec units) at constant TAS	$\bar{V}_\zeta$	Rudder volume coefficient
		$\bar{V}_\xi$	Aileron volume coefficient
p	Static pressure	v	Component of root mean square velocity
p	Tyre pressure		
p_c	Compressive stress	v	Specific volume of a gas
p_t	Tensile stress	v_c	Rate of climb
p_0	Total static pressure head	v_d	Rate of descent
p_1	Static pressure at engine compressor face	W	Instantaneous weight
		W	Specified applied load
p_1, p_2	Different values of ambient pressure	W_A	Equipped airframe weight
$\bar{p}$	Average pressure differential across aerofoil chord	W_E	Powerplant weight
		W_F	Fuel weight
$\bar{p}$	Specific weight of engine (engine weight/net thrust)	W_0	All-up weight
		W_P	Payload
Q	Applied shear force	W_S	Structure weight
Q	Probability of failure	W_a	Weight of air acted on per second by engine
Q	Quantity of fuel consumed		
q	Dynamic pressure ($\frac{1}{2}\varrho V^2$, $0{\cdot}7pM^2$)	$W_{(w+u)}$	Weight of wing plus undercarriage
q	Shear stress	W_1, W_2, etc.	Component weights
R	Gas constant	w	Downwash velocity
R	Probability of reliability	w	Vertical gust velocity
R	Radius of turn	w	Velocity of propeller slipstream
R	Range in still air	X	Structural length
R	Total resistance (air plus water drag) of seaplane	x	Distance measured in direction OX
		x_L	Moment of total lift about centre of gravity
(R)	Unspecified requirement		

Symbol	Meaning	Symbol	Meaning
$x_{(w+u)}$	Distance of **CG** of wing plus undercarriage from **CG** datum of aircraft, along OX axis	Δ	Load on water
		Δ	An increment
		∇	Displaced volume
$x_1, x_2, x_3, \ldots$	Component distances from **CG** datum along OX axis	δ	An increment of small order
$\bar{x}$	**CG** coordinate along OX axis	η_0	Efficiency of overall propulsion process
y	Distance measured in direction OY	η_p	Efficiency of mechanical propulsion process (ideal, Froude efficiency)
y_1, y_2, y_3, etc.	Component distances from **CG** datum along OY axis	η_t	Efficiency of 'internal' thermal process
$\bar{y}$	**CG** coordinate along OY axis		
Z	Structural depth	$\eta_{p'}$	Effective propulsive efficiency
z	Distance measured in direction OZ	θ	Semi-vertex angle of Mach cone
z_D	Moment arm of total drag about **CG**	Λ	Angle of sweep of aerofoil along the quarter chord line
z_F	Moment arm of net propulsive force about **CG**	Λ_{LE}	Angle of sweep of leading edge
		Λ_{TE}	Angle of sweep of trailing edge
z_1, z_2, z_3, etc.	Component distances from **CG** datum along OZ axis	μ	Dynamic viscosity
		μ	Coefficient of friction between wheels and ground
$\bar{z}$	**CG** coordinate along OZ axis		
α	Angle of attack	ν	Kinematic viscosity (μ/ϱ)
β	Angle of sideslip	π	3·1417
γ	Ratio of specific heats of air (approximately 1·4)	ϱ	Density at height other than sea level
		ϱ_0	Density at sea level
γ_c	Angle of climb	σ	Relative density (ϱ/ϱ_0)
γ_d	Angle of descent	ϕ	Angle of bank

Units

Significant additions have been made to the systems of units used in aeronautics since *The Anatomy of the Aeroplane* was first published. Basically there are now three systems. First is the academically dignified international *Systeme International d'Unites*, of 1960, or SI, which is metric in origin and seeks to unify all units internationally. In SI, for example, a kilogram is a unit of mass; but previously, in what might now be called the 'market-metric' system of the pre-1960s, it is a unit of weight, i.e. the product of mass X acceleration (gravitational in this case). Third is the system which, with only small differences between them, is used in Britain, in the USA and in this book.

That is not cavalier. Simply, in *practical* aeronautics one must be ambidextrous, using whichever system is in use locally, applying the principle; 'When in Rome, do as the Romans do'. This above all is intended to be a practical book. While SI units are useful academically in science and engineering, and have largely replaced the former metric system in Europe, world markets are American influenced. Their practical engineers still work in physical pounds (weight), yards, feet and inches, miles and their own special gallons (which are about one-fifth smaller than those of the UK). In the UK the same physical units are still used in the field in the form of the old Imperial system of pounds, yards (the length of one pace, and also the distance from the tip of the nose to the end of the outstretched middle fingers — used for measuring cloth); feet (roughly the length of one's adult foot); inches (the width of the first joint of the thumb); gallons (ten pounds being the weight of one Imperial gallon of water); and statute miles (20—25 of which could be averaged by a man or a horse in one day). In aeronautics the nautical mile, which is equal to 6080 ft and one minute of arc on a Great Circle of Longitude, when traversed in one hour provides us with the knot, a measure of speed. Thus, it is correct to say that an aircraft is travelling at so many knots (not knots per hour). The British system is called FPSR (foot, pound, second, Rankine).

Those of you who throw up your hands in despair: stop! SI and metric systems might be easier to manipulate because both are rationalized around our ten fingers as a base. The duodecimal system of yards, feet and inches based upon twelve uses man as the module. It arose among practical Anglo-Saxon farmers who split portions into shares (and Shires) and used their bodies as yardsticks. Thus: share a yard, or a foot measure, or a piece of bread by breaking it in half again and again, and you find numbers like two, three and four (out of which we get 2 X 3 = 6, 2 X 4 = 8 and, of course, 12), whereas ten is only divisible by two and five apart from itself.

The meter happens to be much more recent and was established as the unit of measurement in Europe by the conquests of Napoleon Bonaparte, after a committee of the French academy recommended its

adoption in a report to the National Assembly in 1791. As a measure it is little more than a yard in length: (39.37/36.00) inches, i.e. 9.36% longer. However, that small amount can be a downright nuisance in the field, because instead of using one's pace as a yardstick while walking, one has to carry around a rule of some sort.

Most inventions are prosaic. The meter is so close to the girth of a well-fed man that I suspect it really started life in that way, as the measure from belt buckle to hole of a French worthy: Lagrange, Laplace, or even stout Napoleon Bonaparte himself. Its 39.37 inches was satisfyingly longer than the arrow yard-stick of the ancient English enemy. Its manipulation involved 10^1, 10^2 and 10^3, for those who found ten fingers easier to work with than 12.

All that was then needed was to blind with science the meter's origin, defining it oddly but impressively, as one ten-millionth (10^{-7}) of the distance from one of the poles to the equator at sea level — until the Earth was found to be an oblate spheroid, and not a sphere. It was translated into the length of a platinum—iridium bar kept under closely specified conditions in Paris. Later still it became defined as the wavelength of a light wave produced by the krypton-86 atom, which fitted conveniently and had greater physical constancy under a wider range of conditions than a bar of metal-alloy.

The litre was defined as one-tenth of one meter cubed (1000 cubic centimeters), while that volume weighed one kilogram (1000 grams). And so a new measure, with the power of France behind it, was adapted to science and to the European market place. Having said that, although the meter is a little over 9% longer than the yard, fortuitously, 1000kg, or 1 ton, is within 2% of one Imperial ton; while the French still work in fractions of 12 when selling wine. To buy six seventy-five centiliter bottles is near enough one English gallon of wine (or water in an emergency).

Never dismiss the duo-decimal system lightly because it uses man as the module. Many years ago accurate assessments of Soviet aircraft performance were made on an occasion during the Cold War, during an official visit by Western representatives to the air display at Tushino in the Soviet Union, in the late 1950s. Parked aircraft could not be measured, but by using paces and the outstretched tip of the middle finger from the end of the nose (one yard, i.e. 3 x 12 = 36 inches and, incidentally, half a fathom), the width of a thumb (one inch), the closed and open spans of the hand (four and eight inches), the elbow to the tip of the middle finger (the 20 inch biblical cubit), dimensions could be translated into coarse British units. From practical assessments of wing loadings in pounds per square foot; weight from number, size of tyre footprint and tyre pressures; Mach number from wing sweep angle (using paces for triangulation and trigonometry) and 'eyeballed' sharpness, fineness and profiles of aerofoil sections; (lift/drag); thrust (from jet-pipe diameter); and fuel capacity (in pounds and gallons), from knowing rough specific fuel consumptions for the kind of powerplants on view, reasonable 'ball-park' range, operating altitude and endurance estimates were made. All would have been that much harder to derive with similar accuracy using a measure 9.36% longer than a farmer's pace and cloth-yard.

The point, of course, is to urge you — especially the young — not to be overawed by the fussiness of scientific discipline, In aeronautics *all three* systems have their uses, depending upon where you are and what you are doing. Simply accept that different systems exist and stop worrying about it. There follow tables to help you find your way around. Finally, never be more accurate than need be. If you can only measure to the width of a little finger nail, don't write to ii decimal places the answer given by your computer, just because it says so!

Table 1 Units

For all calculations it is necessary to use a consistent set of units. Those most commonly used in Britain are the slug for the unit of mass, M, the foot for the unit of length, L, and the second for the unit of time, T. The following table gives the dimensions and units of a number of terms used in aeronautical work

Quantity	Dimensions	Units
Length* (chord c, tail arm l_t)	L	ft
Area (wing area S, wetted area A_w)	L^2	ft^2
Speed* (forward speed V)	L/T	ft/sec
Acceleration (gravitational g)	L/T^2	ft/sec^2
Kinematic viscosity ν	L^2/T	ft^2/sec
Mass (mass airflow m_a)	M	slugs
Air density ϱ	M/L^3	$slug/ft^3$
Force (lift, drag, thrust, weight)	ML/T^2	lb
Pressure p	M/LT^2	lb/ft^2
Moment of inertia	ML^2	slug ft^2
Angle (attack α, yaw β)	—	radians (and degrees)

* Distance (length) is also measured in miles and speed in miles/hour: nautical miles and knots being used respectively in aeronautics. 1 nm = 6080 ft and 66nm = 76stm, while I h = 3600 sec.

Table 2 Prefixes

The following prefixes may be used to indicate decimal fractions or multiples of basic or derived metric St units (Systeme International d'Unites, 1960) which employs the kilogram, meter and second as the respective units of mass, length and time

Fraction	Prefix	Symbol	Multiple	Prefix	Symbol
10^{-1}	deci	d	10	deca	da
10^{-2}	centi	c	10^{2}	hecto	h
10^{-3}	milli	m	10^{3}	kilo	k
10^{-6}	micro	μ	10^{6}	mega	M

Table 3 General conversions

Conversion factors between the British FPSR (foot, pound, second, Rankine) system and SI (Systeme International) units

Quantity	FPSR units	Multiply by	To obtain SI units	Multiply by	To obtain FPSR units
Mass (M)	slug	$1{\cdot}459 \times 10$	kg	$6{\cdot}852 \times 10^{-2}$	slug
Length (L)	ft	$3{\cdot}048 \times 10^{-1}$	m	3·281	ft
Density (ϱ)	slug/ft^3	$5{\cdot}155 \times 10^{2}$	kg/m^3	$1{\cdot}940 \times 10^{-3}$	slug/ft^3
Temperature (T)	°F + 460	$5{\cdot}56 \times 10^{-1}$	°C + 273	1·8	°F + 460
	°R		K		°R
Velocity (V)	ft/s	$3{\cdot}048 \times 10^{-1}$	m/s	3·281	ft/s
	mph	1·609	kph	$6{\cdot}214 \times 10^{-1}$	mph
	knot	1·853	kph	$5{\cdot}396 \times 10^{-1}$	knot
		0·515	m/s	1·942	
Force (F)	lbf	4·448	N (newton)	$2{\cdot}248 \times 10^{-1}$	lbf
	slug ft/s^2		kg m/s^2		slug ft/s^2
Work	slug ft^2/s^2	1·356	Nm	$7{\cdot}376 \times 10^{-1}$	slug ft^2/s^2
Energy (J)	BTU		(joule)		BTU
Power (W)	slug ft^2/s^3	1·356	Nm/s	$7{\cdot}376 \times 10^{-1}$	slug ft^2/s^3
	hp (550 ft lbf/s)	$7{\cdot}456 \times 10^{2}$	(watt)	$1{\cdot}341 \times 10^{-3}$	hp (550 ft lbf/s)
Pressure (p)	slug/ft s^2	$4{\cdot}788 \times 10$	N/m^2	$2{\cdot}088 \times 10^{-2}$	slug/ft s^2
	lbf/ft^2		(pascal)		lbf/ft^2
		$4{\cdot}788 \times 10^{-4}$	bar	$2{\cdot}088 \times 10^{3}$	
Specific energy, etc,	ft lbf/slug	$9{\cdot}290 \times 10^{-2}$	Nm/kg	$1{\cdot}076 \times 10$	ft lbf/slug
Gas constant	ft lbf/slug °R	$1{\cdot}672 \times 10^{-1}$	Nm/kg K	5·981	ft lbf/slug°R
Coefficient of viscosity (μ)	slug/ft s	$4{\cdot}788 \times 10$	kg/m s	$2{\cdot}088 \times 10^{-2}$	slug/ft s
Kinematic viscosity (ν)	ft^2/s	$9{\cdot}290 \times 10^{-2}$	m^2/s	$1{\cdot}076 \times 10$	ft^2/s
Thermal conductivity (k)	lbf/s°R	8·007	N/s K	$1{\cdot}249 \times 10^{-1}$	lbf/s°R
Heat transfer coefficient	lbf/ft s°R	$2{\cdot}627 \times 10$	N/m s K	$3{\cdot}807 \times 10^{-2}$	lbf/ft°R
Frequency	c/s	1·0	Hz (hertz)	1·0	c/s

Note: Various derived units are named after eminent scientists and engineers. In addition to the newton (Sir Isaac Newton), there are:
degree Celsius: Anders Celsius (1701—1744), Swedish astronomer;
hertz: H. R. Hertz (1857—1894), German physicist;
joule: James Prescott Joule (1818—1889), English physicist;
kelvin: Lord William Thomson Kelvin (1824—1907), Scottish physicist;
pascal: Blaise Pascal (1623—1662), French philosopher and scientist;
degree Rankine: William George Macquorn Rankine (1820—1872), Scottish scientist and engineer;
watt: James Watt (1736—1819), Scottish engineer who invented the first really efficient steam engine.

Table 4 Useful conversions to metric (Market-Measure*)/St of British and American units

Quantity	Multiply by	To obtain
acre	0·4047	ha (= $10^4 m^2$)
cubic feet (ft^3)	0·0283	m^3
foot (12in)	0·3048	m
feet per second (ft/s, fps)	0·3048	m/s
	1·0973	km/h, kph
	0·5921	knot
square feet per second (ft^2/s)	0·0929	m^2/s
foot pound (ft lbf)	1·3558	J
horsepower (hp = 550 ft lbf/s)	746·0	W
	0·746	kW
Note		
brake horsepower (BHP)		
shaft horsepower (SHP)		
equivalent shaft horsepower (ESHP)		
thrust horsepower (THP) = propeller efficiency × BHP		
≃ 0·7 to 0·8 × BHP		
thrust equivalent horsepower (TEHP) = SHP + jet thrust (lbf) × true airspeed (ft/s)/550		
≃ SHP + jet thrust (lbf)/2·6 (lbf/TEHP) at sea level		
horsepower per pound (weight) (hp/lb)	1·6447	kW/kg* (market weight)
horsepower per square foot (hp/ft^2)	8·03	kW/m^2
inch (in)	2·54	cm
knot (k)	1·0	nm/h
	1·8532	km/h
Mach number	1·0	
= speed of sound (1117 ft/s, SL ISA)	0·3048	m/s
=	1225	km/h (approximately)
=	660	knot (approximately)
=	760	mph (approximately)
nautical mile (nm = 6080 ft)	1853·20	m
= 1 minute of arc of Longitude	1·8532	km
=	1·515	stm
statute mile (stm = 5280 ft)	1·6093	km
=	0·8684	nm
pound weight (lb)	0·4536	kg*
pound force (lbf)	4·4482	N
pound per hp (lb/hp)	0·6080	kg*/kW
pound/hour/horsepower (lb/h/hp)	168·93	μg/J
pound per pound (force) (lb/lbf)	0·102	kg*/N
pound/hour/pound static thrust (lb/h/lbst)	28·328	mg/Ns
pound (force) per square foot (lbf/ft^2)	47·88	N/m^2
pound (weight) per square foot (lb/ft^2)	4·88	kg^*/m^2
pound per square inch (lb/in^2)	6·8948	pièzes
ton (ton) (2240 lb)	1016·05	kg*
	1·01605	t
ton (short) (2000 lb)	907·18	kg*
	0·907	t
tonne (t) (1000 kg*)	0·9842	ton
yard (yd) (3 ft)	0·9144	m

Table 5 Definitions of magnitude (from Webster's Dictionary and Thesaurus)

US	UK	Magnitude
Million	Million	10^6
Billion	Milliard	10^9
Trillion	Billion	10^{12}
Quadrillion	—	10^{15}
Quintillion	Trillion	10^{18}

Part 1 ENVIRONMENT

Chapter 1 The Atmosphere

1.1 Composition of the atmosphere

The atmosphere is a fluid skin surrounding the Earth and extending out to about 500 miles. It is a mixture of gases that are chemically indifferent to one another. Roughly half the total weight of the atmosphere is accounted for by the first 18,000ft, and another quarter by the next 18,000ft. Up to about 50 miles the composition of the air is more or less constant, except for variation of water vapor content. The proportions of the most important gases present are as shown in Table 1-1.

Table 1-1 Composition of the atmosphere at sea level

Gas	Formula	Percentage volume	Molecular weight	Percentage weight
Nitrogen	N_2	78·088	28·016	75·523
Oxygen	O_2	20·950	32·000	23·143
Argon	A	0·935	39·944	1·286
Carbon dioxide	CO_2	0·030	44·010	0·046

Together with small quantities of neon, helium, krypton, hydrogen, xenon, ozone and radon.

Up to the first 5 or 6 miles the water vapor content varies and depends upon the temperature of the air: the higher the temperature the more vapor that can be held in a given volume. The pressure and density of the atmosphere decrease with height. At very high altitudes the heavier gases fail to rise until, around 50 miles, hydrogen and helium are predominant. The pressure of the amount of oxygen needed to sustain life decreases rapidly with height until around 18,000 ft the danger limit for the human pilot is reached and thereafter oxygen must be fed mechanically. Around 100,000ft there is no longer enough oxygen to support combustion in the most advanced turbojet engines now in service.

In temperate latitudes the first 36,000ft marks the extent of the troposphere, the region of decreasing temperature with height. Above the troposphere and separated from it by a hypothetical boundary called the tropopause lies the stratosphere, a region of initially constant temperature that gradually increases from about -56^{0}C at 20 miles to a maximum around -20^{0}C at 35 miles. The tropopause is not clear-cut in practice, varying from about 30,000 ft at the poles to about 54,000ft at the equator, as shown in Fig. 1.1.

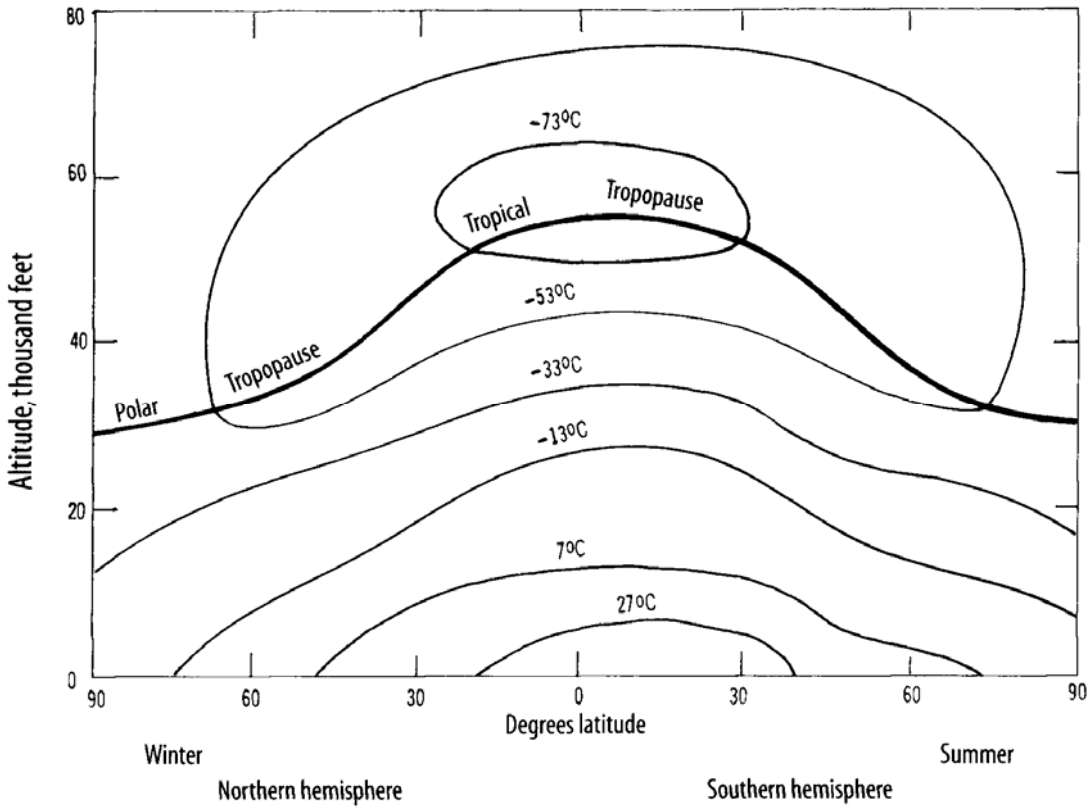

Fig. 1.1 Typical variation in atmospheric temperature along a meridian of longitude, summer in the Southern Hemisphere.

It follows that much lower temperatures are encountered at altitude over the tropics than over the poles, because the higher tropopause allows the temperature of the atmosphere to fall further before the region of constant temperature is reached. For this reason most low-temperature flight trials are carried out in the tropics.

The atmosphere is divided into further layers by different authorities. The simplest is into the mesosphere, adjacent to the stratosphere, in which the temperature again falls with height, reaching a minimum near -88^{0}C around 50 miles, where it is bounded by the mesopause. The rare noctilucent clouds — meaning 'shining at night' — occur near the mesopause, and are thought to be formed by volcanic meteoric dust and ice crystals, resulting from the amalgamation of hydrogen from outer space with atmospheric oxygen molecules. Above the mesopause lies the thermosphere, extending out to 350 miles or more and marked by increasing temperature with height. The relatively high temperatures are thought to be caused in part by ionization of the atmospheric gases by various forms of cosmic radiation. Beyond the thermosphere lies the fringe region, or exosphere, that is poorly defined by limits assumed to lie between 350 and 600 miles, although some think 1,000 miles.

1.2 Phenomena affecting the operation of aircraft

There are a number of atmospheric conditions and phenomena that affect the operation of aircraft:

(1) Aircraft and engine performance depend directly upon the physical state of the atmosphere: and in particular upon the pressure, density and temperature of the local air mass in which flight is taking place. The local conditions around an aircraft are referred to as ambient conditions.

(2) An aircraft is propelled through an air mass which is in motion relative to the surface of the Earth. This introduces navigational problems that grow with flying-time and, therefore, affect the amount of special equipment carried by an aeroplane in order to operate in a specific role.

(3) The state of the weather affects operations and phenomena such as heavy rain, hail, snow, ice, fog and thunderstorms must be planned for. Temperature variations within the atmosphere cause air masses to move and interact, resulting in wind and turbulence. Turbulence is a major hazard affecting the structural design and planned life of the airframe, as well as stability and control criteria.

(4) Cosmic radiation, a generic term for a large number of solar and galactic radiations, has not presented much of a hazard until now. The appearance of the supersonic transport, or SST, is now highlighting some of the dangers to be expected from ionization of animal tissues. The maximum influence is found to occur around 75,000 ft, while the intensity of such radiation changes both with height and latitude.

(5) The presence of ozone, a toxic product of ionization, prevents the use of ambient air for cabin pressurization at heights above 60,000 ft. This involves the aircraft designer in additional problems of air conditioning and design against pressure-cabin failure.

1.3 Physical properties of the atmosphere

Air is a compressible fluid that flows and changes shape when subjected to the minutest pressures. There is cohesion between molecules and this gives rise to friction. If there were no friction and the air was incompressible it would correspond with the mathematical concept of an 'ideal' fluid.

The vertical distribution of pressure throughout the atmosphere behaves in a fairly regular manner and decreases steadily with height. Under standard sea level conditions a cubic foot of dry air is assumed to have a defined density, one example of which is 0.002378 slugs/ft^3. The slug is used as a convenient unit of mass in aerodynamics to avoid confusion between pounds force and pounds mass in the ft-lb-sec system. It is derived from Newton's law:

Force mass X acceleration

and 1 pound force causes a mass of 1 slug to accelerate at 1 ft/sec^2. It follows that as 1 pound force is equivalent to 1 pound weight, a mass of 1 slug is 32.2 times greater than a mass having a weight of 1 pound in the Earth's gravitational field, where the acceleration is 32.2 ft/sec^2.

When air is compressed or expanded at constant temperature, a greater or lesser mass then occupies a given volume. Hence, at constant temperature the density is directly proportional to the pressure. However, the temperature changes in practice and the density is no longer directly proportional to pressure alone, and the 3 quantities are inexactly (but commonly) related by the ideal gas equation:

$$\rho \nu = R T \qquad (1\text{-}1)$$

or

$$p = \rho R T \qquad (1\text{-}2)$$

where p = pressure (lb ft^2),

v = specific volume (ft^3 lb),
R = a constant for a given gas (3,090 ft lb/slug/^{0}C for air),
T = absolute temperature (Kelvin, i.e., t^0C + 273^{0}C),
ρ = density (slugs/ft^3).

1.3.1 The standard atmosphere

For the analysis of the manner in which air behaves when a moving body passes it is necessary to define a standard atmosphere to which all measurements can be related. There are many in existence and, for the purpose of this book, that defined by the International Civil Aviation Organization (ICAO) has been chosen.

The ICAO definition of the standard atmosphere is that: the air is a perfectly dry gas; the temperature at sea level is 15^{0}C (i.e. 288^{0}K); the pressure at sea level is 29.92 inches of mercury. The temperature is assumed to lapse at a rate of 1.98^{0}C/1,000ft from sea level to the altitude at which the temperature becomes -56.5^{0}C, i.e. 36,090ft, where the lapse rate changes. The word altitude is used instead of height to denote a vertical distance, based upon the defined pressure and measured from mean sea level. Clearly, an instrument measuring the pressure variation with distance above mean sea level, and calibrated to a precise law, will not give the 'tape-measure' height. Such an instrument is called an altimeter. All altimeters have to be adjusted to a datum pressure whenever they are used, the datum pressure varying from hour to hour and being given out by the Meteorological Office. Elsewhere height is used when speaking generally. Figure 1.2 shows the general characteristics of the ICAO atmosphere to an altitude of 1,000,000 ft. For convenience, density, pressure and dynamic viscosity are shown relative to their sea level values, ρ_0, p_0, and μ_0. Above 80,000ft the curves have been based on the broadly similar US Standard Atmosphere 1962.

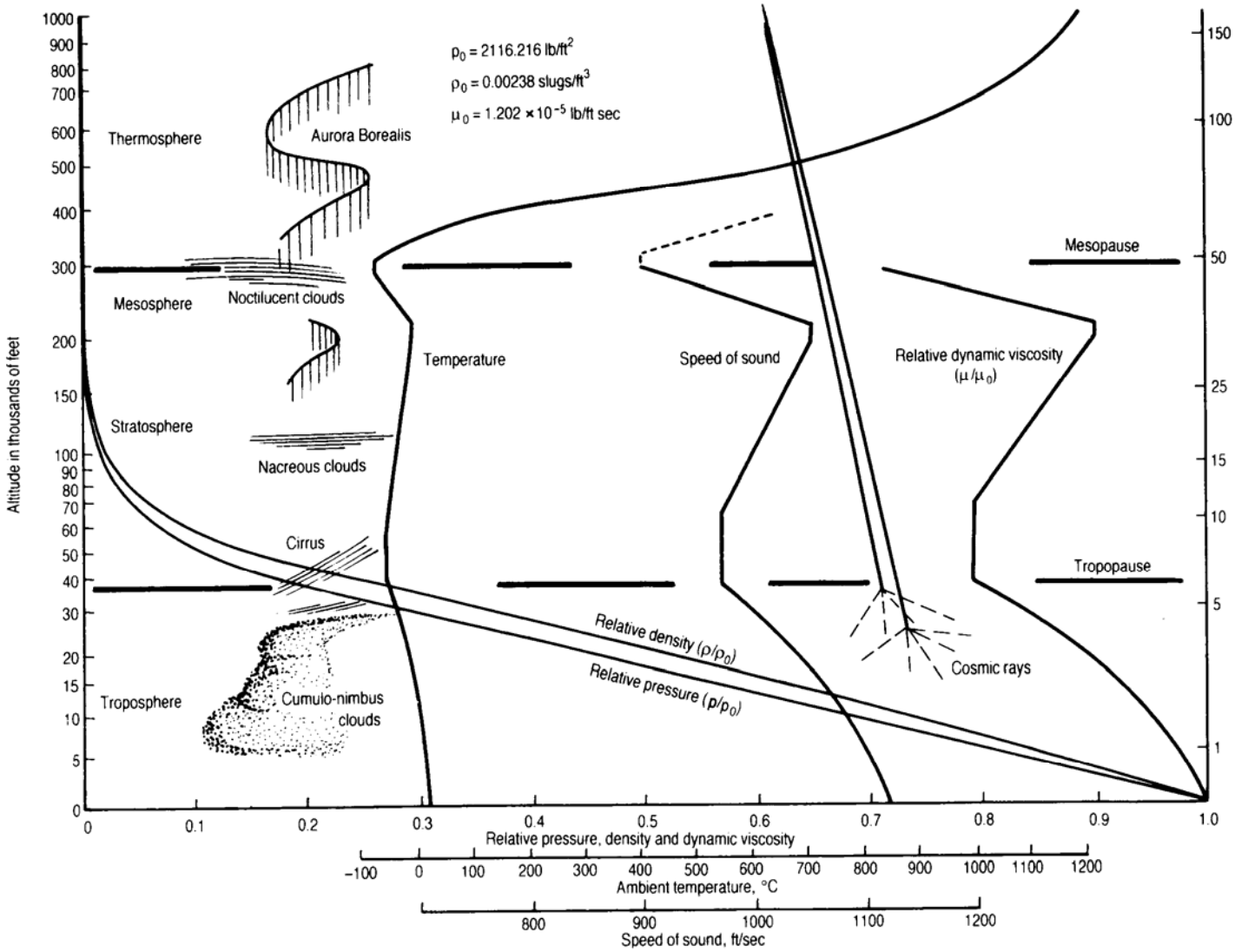

Fig. 1.2 General characteristics of the atmosphere (based upon ICAO and US Standard Atmosphere 1962).

For simplicity the corresponding curve of relative kinematic viscosity, v/v_0, is not shown. The importance of kinematic viscosity will become clearer when we come to discuss 'scale effect' and its influence upon the relative magnitude of aerodynamic forces and behavior of the air when similar bodies of different

sizes pass through it. For the present it is enough to mention that the magnitude of the frictional force which opposes motion of the air is expressed in terms of the dynamic viscosity, denoted μ. Imagine several thin layers of air moving smoothly over each other, rather like sheets of notepaper in a pile that is being spread out (sheared) sideways. The quantity μ is the factor of proportionality between the shearing force per unit area (or shear stress) and the velocity gradient between the layers. At ordinary pressures the dynamic viscosity depends only upon the nature and temperature of the air. However, the density of the air must always be taken into account in aerodynamics, and the ratio of dynamic viscosity to density — the kinematic viscosity — is more important in aerodynamic measurements than the magnitude of frictional forces alone. Hence we meet the following relationships in aerodynamics:

$$\text{Dynamic viscosity, } \mu = \frac{\text{shear stress between adjacent layers of air}}{\text{shear velocity gradient between adjacent layers of air}}$$

and $$\text{kinematic viscosity, } \nu = \frac{\text{dynamic viscosity}}{\text{density}}$$

i.e. $$\nu = \frac{\mu}{\rho} \qquad (1\text{-}3)$$

1.3.2 Local speed of sound and Mach number

The local speed of sound in air is of utmost significance, because the behavior of the air and the associated pressure patterns set up by an aeroplane in flight change radically as the speed of flight approaches that of the local speed of sound. At low flight speeds the particles of air are displaced fairly smoothly by a body, because the particles have time to adjust themselves to the transient situation.

The root mean square of the speed at which the particles move is the speed of sound. When the speed of flight reaches the speed of sound the particles cannot move easily in time and are more violently displaced: the result is marked changes in the pressure field and in density and temperature. The aeroplane is then in the regime of compressibility.

The ratio of the speed of flight to the local speed of sound is called the Mach number, M, after Ernst Mach, the Austrian scientist who is famous for his early study of the behavior of bodies travelling through the air at high speeds. Thus

$$M = \frac{V}{a} \qquad (1\text{-}4)$$

where a = local speed of sound in air, which varies as the square root of the absolute temperature of the local air mass,

V = true airspeed of the aircraft.

No units have been specified because as long as they are the same for V and a, i.e. ft/sec, mile/h or knots, then the ratio remains constant.

In Fig. 1.2 the speed of sound is seem to vary in a similar way to the curve of absolute temperature.

1.3.3 True and equivalent airspeed

An aircraft has two significant speeds. The first, called true airspeed, or TAS, is measured relative to the undisturbed air. The second, called equivalent airspeed, or EAS, is a fiction that is of prime importance in aerodynamic calculations, because the forces acting on an aeroplane depend upon EAS. The two speeds are denoted V and V_i, respectively.

Both TAS and EAS are identical at sea level in the standard atmosphere, but they differ according to a simple law at altitude. The reason for the difference can be explained by imagining what happens as an aeroplane flies through a mass of initially undisturbed air. Through impact and friction every molecule will eventually have momentum imparted to it by the aeroplane in its passage. Some will be swept along at the same speed, others more slowly, and so on down to those that are barely influenced at all. The first molecules which are swept along at the same speed may be thought of as being brought to rest relative to the aeroplane, but work has been done during the action of accelerating from their initially undisturbed state to the speed of flight, V. Every cubic foot of air so accelerated to the TAS has, therefore, an additional kinetic energy, q, where

$$q = 0.5\,\rho V^2 \qquad (1\text{-}5)$$

It is convenient to use this expression in aerodynamic measurements of all kinds, while referring to q as the dynamic pressure. Aerodynamic forces are expressed nondimensionally as pure numbers multiplied by the dynamic pressure and the wing area. It may be shown that for an aeroplane to generate the same forces at altitude as in flight at sea level, it must be flown at such a speed that the dynamic pressure remains constant, regardless of any difference in density of the ambient air. It follows that, in Eqn (1-5), the maintenance of

constant dynamic pressure at different altitudes involves one in flying at different airspeeds. The sea level airspeed, where the density is ρ_0, is the TAS. At any other altitude, where density is Q, the result is achieved by flying at the EAS. It may be shown quite simply that

$$V_i = V\sqrt{\frac{\rho}{\rho_0}} = V\sqrt{\sigma} \quad (1\text{-}6)$$

where σ is the relative density. Figure 1.3 shows the theoretical relationship between TAS, EAS and Mach number.

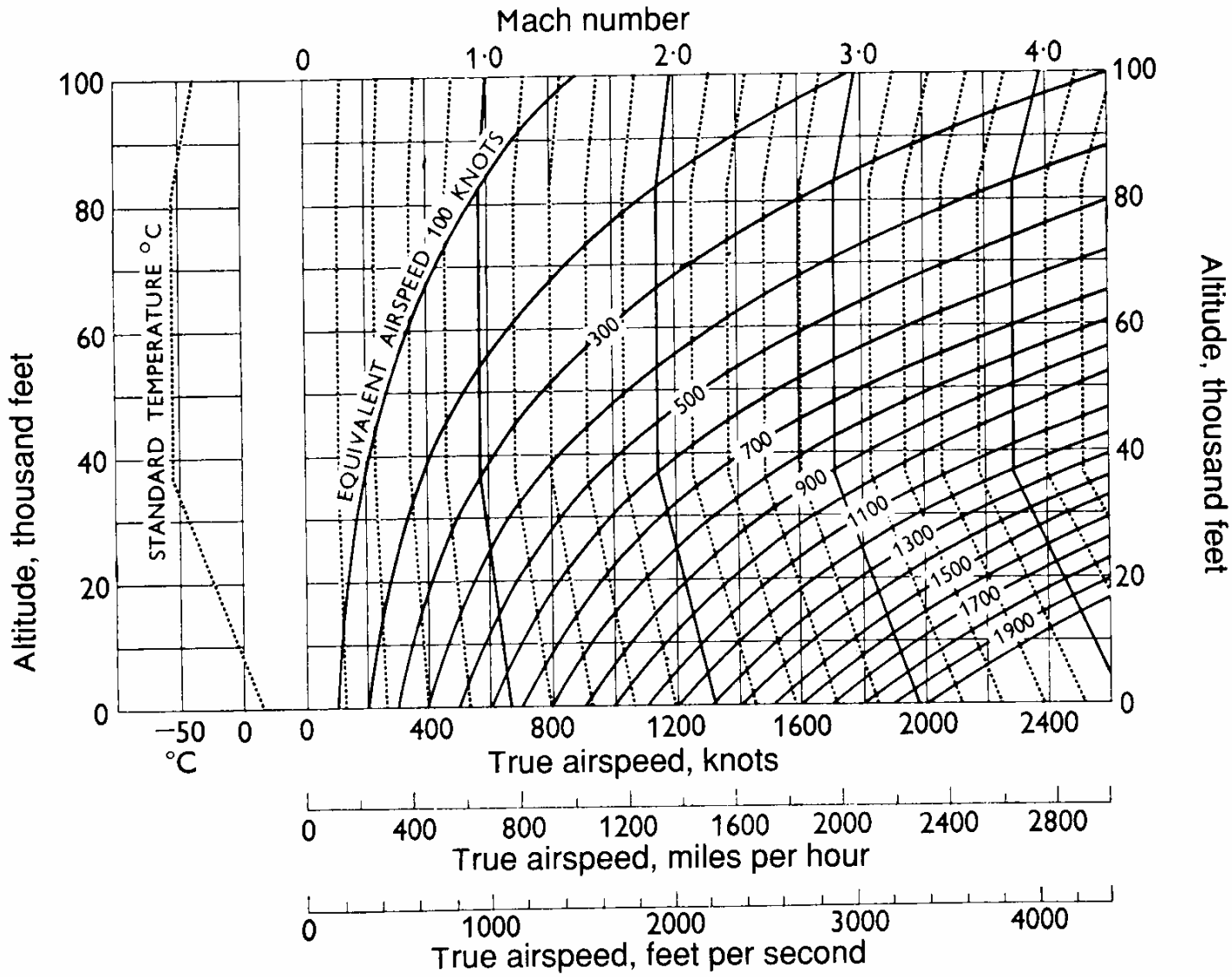

Fig. 1.3 Theoretical relationship between TAS, EAS and Mach number.

There is another useful form of expression for the dynamic pressure given in Eqn (1-5), which is of increasing importance when making calculations for flight at high Mach numbers. The relationship giving the speed of sound in ft/sec:

$$a = \sqrt{\left(\frac{\gamma\, p}{\rho}\right)} \quad (1\text{-}7)$$

where γ = the ratio of specific heats for air, approximately 1.4, and a, p and ρ have their earlier meanings, and it may be shown from this that

$$0.5\,\rho V^2 = 0.5\,\gamma\; p\, M^2$$

i.e.

$$q = 0.7\, p\, M^2 \quad (1\text{-}8)$$

1.3.4 Aerodynamic heating

The addition of kinetic energy to the air by an aeroplane in flight is measurable (if instruments could be made accurately enough) in terms of a temperature rise. The highest temperature that could be measured is called

the stagnation temperature: the temperature of those surfaces which lie locally at right angles to the direction of motion. Such parts of the airframe impart the full change of momentum to the particles of air which, in becoming 'attached', may be thought of as being swept along at the TAS. The adiabatic temperature rise ΔT is given by

$$\Delta T = \left(\frac{\text{TAS in miles/h}}{100}\right)^2 \ {}^0\text{C} \quad (1\text{-}9)$$

to within 3 parts in 1,000. Alternatively, the temperature rise of the boundary layer of air adjacent to the skin at high altitude is given by

$$\Delta T = 75\ M^2 \ {}^0\text{F} \qquad (1\text{-}9a)$$

What does this mean in real terms? At M = 3 the temperature of the leading edge of the wing of an aircraft flying at high altitude reaches at least 600^0F: 100^0F hotter than is needed to roast a side of beef. Kinetic heating becomes critically important at high speeds when it affects structures, causing distortion and internal stress concentrations; it can also involve fuel cooling and similar problems. It is discussed in more detail in the chapter on structures.

From the foregoing we see that air is a mixture of gases which, for practical purposes, can be treated as one gas. The air has temperature (the measure of internal energy of the molecules), density, pressure and viscosity. The behavior of the air in the presence of a moving body can be changed by the rate at which the body is moving. An aeroplane flies, therefore, in a pressure field that is a function of height, speed and Mach number. At this point we may begin to think of an aeroplane having an operational environment.

Ionization and radio interference (blackout)

When kinetic heating is sufficiently intense the molecules of air become distressed and dissociation occurs; in effect they are broken apart. Electrons are dislodged from atoms and molecules of the constituent gases within the atmosphere, leaving them positively charged. The free electrons may then recombine with other molecules, rendering them negatively charged. Charged atoms, molecules or molecular groups are called ions, and their production from neutral molecules is called ionization. Without further stress they revert back in time to their neutral, undisturbed state.

A broad layer of ionization high above the Earth's surface, actually several layers, formed as a result of bombardment of the atmosphere by high-energy particles from space, was discovered by Heaviside and verified later by Kennelly. It is called the Kennelly—Heaviside layer. Varying in altitude according to conditions, it affects the range of transmission of radio signals, as they 'bounce' between the ionized layer and the surface of the Earth.

Similarly, a man-made body, be it a vehicle during re-entry (or debris, like a decaying satellite) forms a superheated shield-like envelope of ionized gases between itself and the atmosphere by impact and friction, which temporarily affects telemetry and radio communications between a spacecraft and Earth. The craft leaves orbit at an altitude around 300 miles (482km) and 17,500 MTAS (27,000 kph), entering the atmosphere along a corridor defined in terms of altitude and airspeed. Kinetic heating is intense and ionization causes a blackout in communications with Earth when the craft is at an altitude around 57 miles (92km) and 16,700 MTAS (27,000 kph). Heating reaches a maximum around 50 miles (80km) and 15,000 MTAS (24,000 kph). The craft exits blackout as it slows and the temperature drops. Radio contact is resumed at an altitude around 41 miles (66km) and a speed of 8,300 MTAS (13,300 kph).

The Space Shuttle has broad undersurfaces of the nose and belly to generate high drag and present a large area over which to dissipate kinetic heating. A wind-tunnel model of the vehicle, simulating re-entry, glows. Shuttle surfaces are covered with heat-resisting tiles designed to withstand temperatures up to $1{,}275^0$C ($2{,}300^0$F). These, coupled with a thermal protection system, keep the temperature of the structure below $1{,}75^0$C (350^0F).

1.3.5 The electromagnetic spectrum

The design of aircraft for stealth is now a reality. By this we mean that they are specially shaped, and coated with materials, which reduce radar, heat and acoustic signatures to levels at which detection is near impossible until too late.

(picture)
Plate 1-1 Kinetic heating of model of BAe Hotol, simulating re-entry in a high drag attitude during tests in a wind tunnel. Ionization occurs at such high temperatures. The project was eventually cancelled in response to the British Government.

(picture)

Plate 1-2 The NASA/Rockwell Shuttle ‘Challenger’ has supporting surfaces fixed for flight, and is mechanically propelled. St is an aeroplane by definition on take-off, and a glider when landing. Ceramic tiles protect its aircraft structure against high kinetic temperatures during re-entry, under conditions simulated in Plate 1-1. Note scorching.

(picture)
Plate 1-3 Angling surfaces to the line of sight (that of the incident ray) is a primary technique for dispersing and diffusing radar returns. Lockheed F-117, a product of the late ‘Kelly’ Johnson’s ‘Skunk Works’.

There are three main areas in the electromagnetic spectrum in which aircraft leave bold signatures (Fig. 1.4):

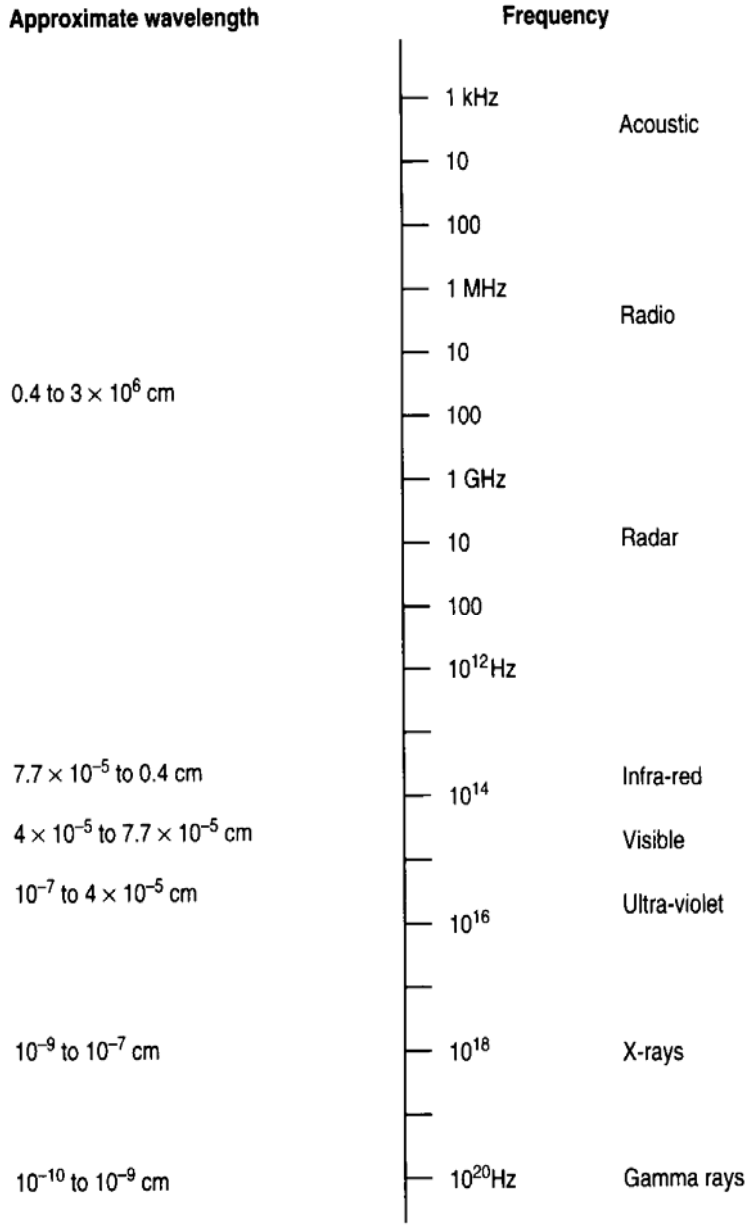

Fig. 1.4 The electromagnetic spectrum.

(1) Audio. The efficiency of acoustic sensors in air is degraded by wind and waves, and even without such noise we are hard pressed to pinpoint accurately aircraft at anything more than 5 nautical miles (8km). The atmosphere is fluid and always in motion. Humidity and temperature lapse-rates degrade reception, and precipitation of all kinds reduces the efficiency of sensors.
(2) Radar.
(3) Infrared.

The last two are electro-optic and are the ones with which we are most concerned.

Surface, airborne and satellite sensors are able to detect electro-optic signatures. Sources include low-frequency electric fields (ELF), magnetic anomalies and thermal 'scars’. Waste heat discharged into the atmosphere from exhausts leaves detectable infra-red scars and signatures. Jet aircraft of all kinds, especially those for V/STOL, leave heat-scars on the surfaces of airfields. When operating from ships at sea it follows that targeting is enhanced by heat scars, ELF and bioluminescence generated by ships themselves.

Figure 1.5 shows the form of an electromagnetic wave, with the electrical field in the vertical plane and the magnetic in the horizontal.

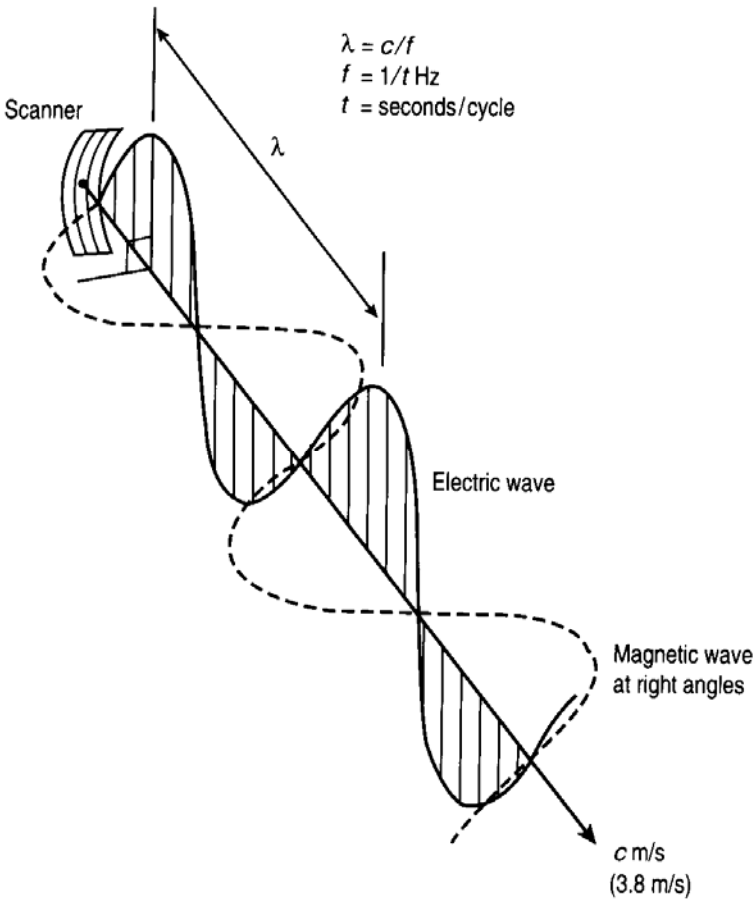

Fig. 1.5 The form of an electromagnetic wave.

The velocity of the wave is

$c = 3 \times 10^8$ m/s (1-10)

and the wavelength $\lambda = c/f$ (1-11)

in which f = frequency in Hertz (Hz), i.e. cycles/second = 1/t (1-12)

where t = time for one cycle, in seconds

Reflectivity and radar cross-section (RCS)

The reflectivity of a body depends upon the following factors:

(1) The average power (rate of flow of electromagnetic energy) radiated in the direction of the target body.

(2) The fraction of wave power reflected back (after natural scattering atmospherically, and by special shaping of the target for the purpose) in the direction of receiving scanner antennae. Heavy precipitation and electric storms affect radar returns.

(3) The length of time the radar beam is on the target.

(4) Form (in terms of size, shape, aspect, material).

(5) Rate of change of impedance between surfaces, and between air, which is a poor conductor, and metal, which is highly conductive.

The radar cross-section is expressed as the size of a sphere which reflects back the same amount of radar energy as the target. The value is not constant, the smallest achievable RCS is head-on. From the side it may be several magnitudes larger. Edges of cowlings, cockpit canopies, undercarriage doors, flat surfaces, air intakes and jet pipes all contribute to increasing RCS. One particular fighter in a similar class to those shown in Fig. 2.2 (F-16A, F-16B/J-79, F-16XL) has, from the side, an actual geometric area of 25 sq. meters, but an RCS of 400sq. meters. Figure 1.6 shows typical values of radar cross-sections and corresponding detection ranges in nautical miles.

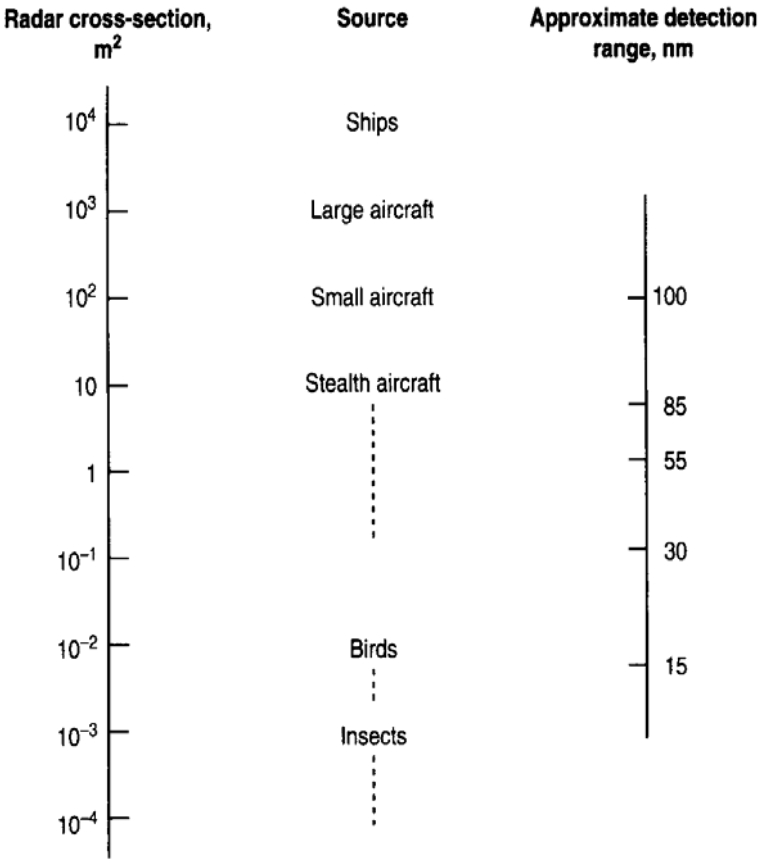

Fig. 1.6 Relative radar cross-sections and detection ranges.

Although the radar cross-section of a body depends upon size, shape, aspect and material, that is not all, because frequency of the radar transmission also enters the picture. For example, a flat plate of 1 sq. meter might have an RCS of 12m^2 when resonated by radar energy, transmitted at a frequency of 3GHz. But increase the frequency to 10GHz and the RCS grows to 150 m^2. A relatively small decoy, employing a *Luneberg lens* to reflect radar energy back to the transmitter, can appear to have an RCS larger than the aircraft, or the ship from which it has been launched. A hostile missile then homes onto the decoy instead.

Concave shapes make excellent reflectors, especially right-angled corners, but reduce the included angle by 1 or 2^0 and the RCS can be diminished ten-fold. It follows that angling surfaces to the line of sight (the incident ray) is a primary technique for dispersing and diffusing radar returns. Angular changes up to about 7^0 have been used in practice.

It follows, as we shall see, that these phenomena now have a powerful effect upon the shaping of aircraft. This changes the approach to their aerodynamic and structural design. Stability and control are by resort to computers, fly-by-wire and fly-by-light systems, to make the pilot feel, by hand and foot, as though he is handling a conventional aeroplane.

Chapter 2 The Operational Environment

The term operational environment is used here to include every aspect of the flight and ground environment of any aeroplane that is carrying out the role for which it was designed. For example, military aeroplanes are designed for more strenuous operating conditions than their civil counterparts: a civil transport for the North Atlantic route is used in more stately operations than a military machine supplying a battlefield. Every aeroplane is designed to operate best in one particular regime of the operational environment. The flight regime is broadly defined by Mach number: i.e. low-subsonic, high-subsonic, transonic, supersonic and hypersonic. Within the design flight regime lies the design point, defined specifically by the speed and height at which the particular aeroplane is assumed to spend the most important part of its working life.

The operational environment is determined by the operator's requirements, by the design requirements, the availability of power plants, the state of the aerodynamic art, materials, technology, sociology and economics. Every aeroplane is a mass of compromises. Each compromise represents a balance between sets of conflicting demands. The picture is complicated by the interdependence of many demands. For example, an airline operator is in business to make money and does not want his aeroplanes to cost more to run than his competitor's. To achieve economy when cruising requires the minimum fuel consumption in that condition and, hence, the minimum power to achieve the required cruising speed.

However, an aeroplane with just enough power for economical cruising will be under-engined when it comes to meeting the case of take-off and baulked approach to landing with an engine-failure. Being under-engined results in longer take-off runs and runways, the inability to climb away safely with engine failure, spending longer at relatively low altitudes over built-up areas (thereby causing sociological problems with noise) and the need to reduce payloads in some hotter parts of the world. It has the same effect as being overweight.

2.1 The flight envelope

The operational environment of an aircraft lies within a boundary, drawn on a basis of speed and height, called the flight envelope, as shown in Fig. 2.1.

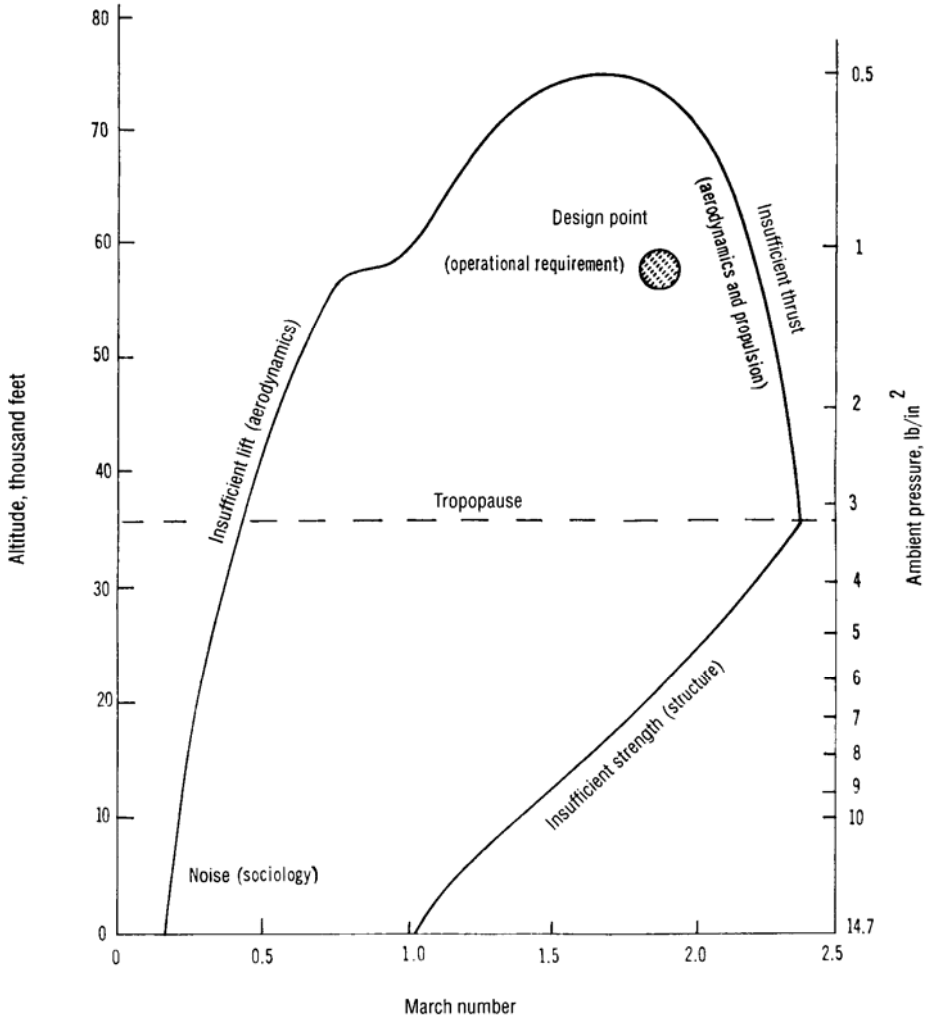

Fig. 2.1 Typical flight envelope of a supersonic aeroplane.

The outline marks the limit of performance in one particular configuration: the arrangement of the aircraft at the time, including external stores carried.

The left-hand side of the figure marks the speed at any height below which there is insufficient lift to fly straight and level. The dip in the curve around Mach 1 is caused by the increased drag and a decrease in aerodynamic and propulsive efficiency. Some aeroplanes exhibit this characteristic to a marked extent, others hardly at all.

The top of the curve marks the region where the minimum level speed coincides with the maximum speed that can be attained with the particular combination of engine and airframe. The right-hand side of the curve represents the propulsive limit, and the structural limits: where higher speed, kinetic heating and higher dynamic pressure would require an excessively strong and heavy airframe.

A boundary similar to Fig. 2.1 can be drawn for any aeroplane, the actual shape of the boundary being determined by the role for which the machine is intended. Typical roles are: transport, freight, aerial work, fighter, bomber, etc. Transport aircraft, for example, are either:

(1) Long haul, i.e. designed for ranges in excess of 2,500 nm.
(2) Medium haul, for ranges of 1,500 to 2,500 nm.
(3) Short haul, for ranges less than 1,500 nm.

The first two tend to be called 'strategic', the third ‘tactical’.

(picture)

Plate 2-1 The Swallow polymorph. For flight at high Mach numbers the aircraft becomes a slender-delta with the middle region of the trailing edge cut away.

(picture)
Plate 2-2 Examples of different marks of one aeroplane, the General Dynamics F-16.

A further consideration is that although the picture was once fairly simple, in that one type of aeroplane did one job, now aeroplanes are so expensive that they are expected to work efficiently in a variety of roles. The trend is towards one aircraft for all related roles. Costs shown in millions of pounds are becoming meaningless today, but in 1961 the cost of one bomber was equivalent to the cost of more than 8 bombers in 1946 (although the nuclear weapon carried was more than 500,000 times more powerful than the conventional bomb of that period). The cost of one supersonic fighter is roughly equal to the cost of nearly 200 wartime Spitfires in 1940.

2.2 Classification of the aeroplane

The name aerodyne means that an aeroplane belongs to a class of flying-machines that are heavier than air — as distinct from aerostats, such as the airship, which in being lighter than air derive their lift from buoyancy. There are many shapes and sizes of aeroplanes, some of which are shown in Fig. 2.2, most of which are as diverse in appearance as others are similar. All can be placed in two broad families. The first family, called the classical family, because it is the commonest, embodies all of the characteristics of the traditional aeroplane. The second is the integrated family, which employs a different approach to aerodynamics.

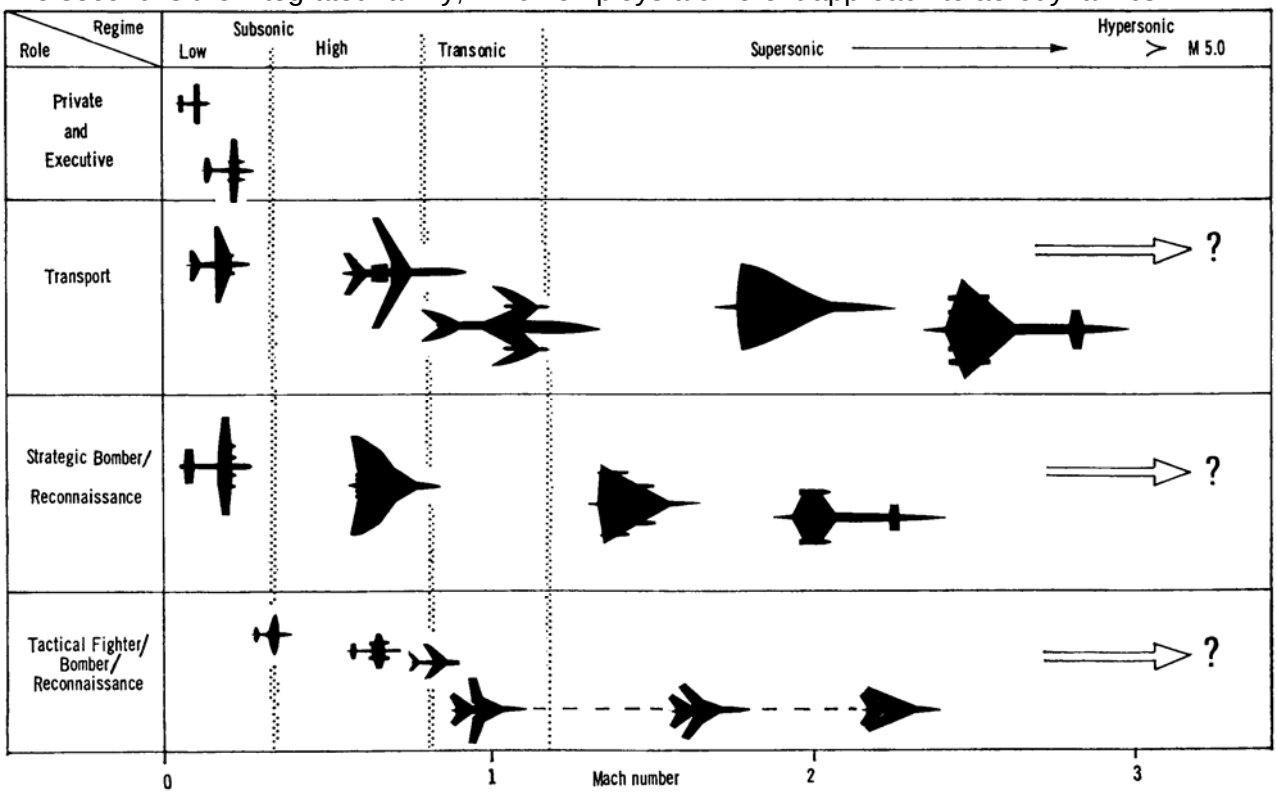

Fig. 2.2 Shape, role and flight regime.

In its simplest form the classical family is marked by an arrangement of clearly distinguishable lifting and non-lifting parts. The basic units are the payload-carrying fuselage supported by the wings, which are in turn stabilized by the wing-like tail surfaces. The ‘tail’ surfaces need not appear at the tail. The horizontal tailplane may lie ahead of the wing, in which case the surface is called a canard — because of the duck-like neck of the long forward fuselage. The primary function of the wing is to provide lift, while that of the fuselage is to house the useful (revenue earning) load, powerplants and crew. Nacelles, which are smaller non-lifting bodies, generally house powerplants and landing-gear, and are usually placed along the wings.

The family of integrated layouts, in its purest form, possesses no clearly distinguishable non-lifting parts. The difference between the classical and integrated layout is shown in Fig. 2-3.

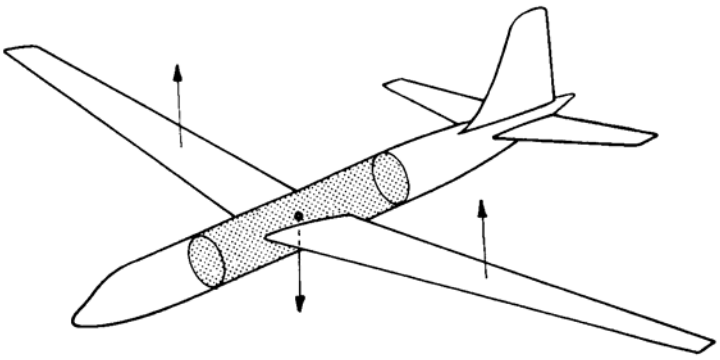

(a) The 'classical' layout of an aeroplane (discrete lift).

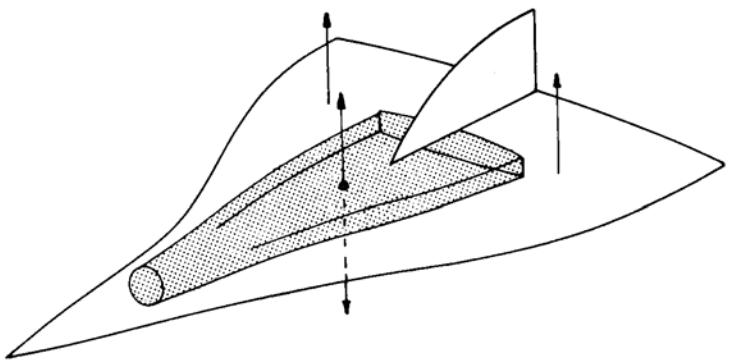

(b) An 'integrated' layout (distributed lift).

Fig. 2.3 The two basic families of aeroplanes.

In the idealized illustration the payload of the integrated design is shown spread spanwise and lengthwise within the wing. Nearly the whole of the integrated surface contributes to the lift throughout the flight envelope but the arrangement is best suited to supersonic flight conditions.

Although at first sight it might seem that both families are quite distinct, both are in fact near relatives. The relationship was most clearly seen in the historic polymorphous design of Dr Barnes Wallis, which changed the wing shape in flight to maintain minimum drag conditions. The principle has been widely adopted, in the USA, the UK and Russia, for example.

The classical family dominated the aerodynamic field for the first 50 years. Much of the trouble that aeroplanes ran into when they met the hypothetical 'sound barrier' in the 1940s was due to the attempt of designer and aerodynamicist to extend the classical layout into a region of new aerodynamic phenomena. The most characteristic change in the classical layout was to sweep back the lifting surfaces.

With the sweeping back of wings came thinner wing sections, sharper leading edges and increasingly slender bodies, so that changes in the gradient of the surfaces of the aeroplane did not take place too rapidly for the molecules of air to negotiate. The very slender integrated layout represents the ultimate result of these trends.

(picture)
Plate 2-3 Lockheed Martin/NASA blended-wing/body concept, which links the two basic families of aeroplanes in Fig. 2.3 (see also Appendix C).

2.2.1 Group, type and mark

Within a family are found many variants, in fact an infinity of possible shapes. Each shape is a function of the role of the aeroplane and the flight regime within which it is designed to operate. The different shapes featured in Fig. 2.2 represent different groups of aeroplanes.

Each group of aeroplanes contains a large number of different types, each one of which represents the ideas of the people who built it about the best way of meeting the operational and design requirements.

Although the final configuration of a type is determined by an apparently incontrovertible set of scientific principles and disciplines, in reality fashion plays an important part, so that the thinking of a designer is channeled by what is generally referred to as current practice. Every so often the pattern of aeronautical development breaks away from current practice: sometimes through the obvious courage and clarity of thought of an individual, often through a technical breakthrough in materials, techniques and principles.

During the life of an aeroplane various improvements may be important enough to cause fundamental changes in design. Such changes result in fresh marks of a particular type.

2.3 Configuration

So far the aeroplane has been fitted into the context of an operational environment, and it has been said that the external shape is determined primarily by the aerodynamic properties required in the intended flight regime. In fact an aeroplane may be thought of as having three separate aspects of shape which, when combined, make up its configuration, i.e. the unique aerodynamic arrangement of wings, fuselage, control and stabilizing surfaces, combined with power units.

The first aspect of configuration, the aerodynamic shape, is the arrangement of the essentially aerodynamic parts. The second aspect is the internal propulsive shape, again largely aerodynamic, for it is important to duct air into and out of the aeroplane for economic and efficient use by the propulsion system, which includes the engines and associated ducting. The third aspect of configuration is the internal shape determined by the payload and structural layout. If, therefore, the payload and design point within a flight regime are given, then the final configuration of the aeroplane will be a function of three independent variables:

Configuration = aerodynamics + propulsion + structure = f(R) (2-1)

where f(R) is some unspecified function of the requirements.

The point of emphasis is that no design can ever be successful if the right account is not taken of each variable in relation to the others. In the past good designs have depended as much upon the intuition and artistry of the designers in their interpretation of requirements and juggling of the variables as they have upon the logic of their reasoning.

It must be remembered, however, that an aeroplane is in many ways a living thing, in that once in flight each aeroplane has handling and control characteristics that are unique, to a degree. The handling and control characteristics depend upon the response of an aeroplane to disturbances, either from the air in which it is flying, or from the pilot. The problem of response is largely one of configuration: the effect of the arrangement of aerodynamically sensitive surfaces and the various masses making up the aeroplane upon the dynamic condition of flight. Although an aeroplane may be statically in balance, according to all calculations, and although it may appear to have the right arrangement and size of control and stabilizing surfaces, in certain flight conditions it may display uncontrollable tendencies. Finding these conditions and proposing ways of avoiding and curing the tendencies is the task of the test pilot, working with the designer, aerodynamicist and engineer.

Although the interaction between the inertia of an aeroplane about different axes and the aerodynamic properties is largely a modern problem, associated with long heavy fuselages and relatively small wings, this does not mean that designers have now to face different problems from their predecessors: they still have to find ways of carrying the maximum load with the minimum airframe; to find the right power units at the right time in the development of an aeroplane to enable it to carry the load; to find adequately strong materials to provide maximum strength with minimum weight under a wide band of operating conditions; and to make the aeroplane stable and controllable throughout the flight envelope.

Because the problems are immutable there is much to be gained from the study of aeronautical history. Although there have been occasional jumps — or, more accurately, a steepening in the rate of development — in the evolution of the aeroplane, aeronautical history should be viewed as a continuous process. The steepening of the rate of development has corresponded with breakthroughs in propulsion, fuels, materials and techniques. An apposite example was the advent of the gas turbine and the tremendous advance in high-speed performance that followed. History can be studied most fruitfully if attention is paid to the pitfalls as well as the triumphs, for man always learns most from adversity.

Part 2 REQUIREMENTS

Chapter 3

Requirements and the Specification

The configuration of an aeroplane is a function of the requirements that it is designed to satisfy: in other words the operational environment fixes the shape. Inevitably the converse is true: that the shape given to an aeroplane by the designer limits what it will do. This lies at the root of many present problems, for the designer needs to know at an early stage in the development of a design just what can be fixed, so that plans can be made for production. In contrast the operator — the military operator especially — wishes to leave a design fluid and allow as much flexibility as possible, to ensure that the limitations of a design will be small when matching it to rapidly changing requirements.

3.1 Operational requirements

Operational requirements are either civil or military. They arise directly from the world situation and as the world situation changes constantly so do the operational requirements. One day there may be a need for an aeroplane capable of delivering a nuclear weapon, as a traditional bomber, anywhere within 5,000nm radius of base. The next day finds the same aeroplane needing to carry an airborne ballistic missile that can be launched a long way from the target, because the aircraft has become vulnerable to a new development in enemy air defence. In time the second requirement becomes redundant, because of still newer developments.

There are many civil analogies: one of the most apposite being the supersonic transport, or SST. The technical advances needed to make such an aeroplane a success are roughly proportional to the cruising range and Mach number. However, both range and Mach number required by a particular operator depend upon geography, politics, economics, population needs and national pride. Of these, politics is really much too simple a word to use, because there is a sort of national strategy involved too, that springs from nationalist predilections, prejudices and desires. These in turn depend upon geography and national history — in fact one may talk of geopolitics.

The high cost of making aeroplanes has led to rationalization of the aircraft industry in the UK. In the developed parts of the world the aircraft industries, impelled by the need to design and develop war material, have tended to become the leader industries for research and development in a vast number of fields. At this time, however, there is an equally imperative need for simpler aircraft for use in the remoter and less developed parts of the world, to which the younger generation in aeronautics could well devote more energy and attention than has been done in the past. The benefits that would accrue from such attention cannot be measured in terms of cost.

3.1.1 Operational criteria

The essential thing to grasp is that whatever the aeronautical aspirations of an operator, or the national predilections and prejudices that govern his thinking, aeroplanes are costly to build and fly. To avoid wasting money aeroplanes must be productive, they have inherent potentialities and limitations, and the design of an aeroplane must be such that the greatest potentialities are realized before too much money has been spent on development. Nearly every machine has to last longer than at first expected, but an aeroplane will sell better if the inherent development potential is readily apparent when the design first appears, for in this way the aircraft acts as a stimulant to further rapid development, sometimes in quite unexpected directions.

An aeroplane must be matched to the needs of the country concerned. One of the most interesting exercises at this time is, for example, looking at ways in which aircraft might be used to improve the per capita income in developing countries.

Care must be taken when considering needs. Since the first edition was published, per capita income has increased faster in the industrially developed world than among developing nations. A rough calculation suggests that in the UK average income has increased 30-fold in 30 years, from about £470 to, say, £14,000 per annum. Average incomes in India and East Africa are 1/20th or less than those of the UK. Whereas nearly 4 out of 5 people work in agriculture in the developing world, less than 1 in 8 do so among the industrially advanced nations. Bear in mind that in 1997 a flag-carrying jet airliner (which every nation buys as an assertion of sovereignty) may represent 1,000 times the national average income in a developed country. Yet this can equate to a crippling 30,000 to 40,000 times the average income in a nation newly emerging. So, clear criteria must be established when tackling the operational needs of a region.

A study of operational criteria could become a book in itself, and only the simplest and broadest notes are made here of what is probably most useful:

(a) Climate, this affects the air conditioning (the environment that must be provided for passengers within the aircraft) and also the choice of structural materials.
(b) Population, which requires a survey of the people likely to need air transport for various purposes.
(c) The transport needs of the population, which are a function of the economy, and thus dependent upon (b).
(d) Availability of airfields and landing areas, all of which depend upon topography.
(e) Routing, and hence, range and altitude, which depend upon topography and should be related to (d).

It is apparent that none of the criteria can be considered in isolation for very long. Climate and topography, latitude, longitude and distance from the sea, are related to affect the local economy. Transport needs depend upon the local economy and upon the geographical factors already mentioned. Communications are of vital importance in all aircraft operations, and these depend upon topography. The availability of land or water for operations, and the approaches to landing grounds, affect the excess of power and lift that must be built into a machine to enable it to operate safely and surely when needed.

All of the criteria have an effect upon the ultimate configuration of an aircraft matched to a set of operating requirements. Their influence is shown very generally in Fig. 3.1, which also serves to show the

broad development of the rest of the book.

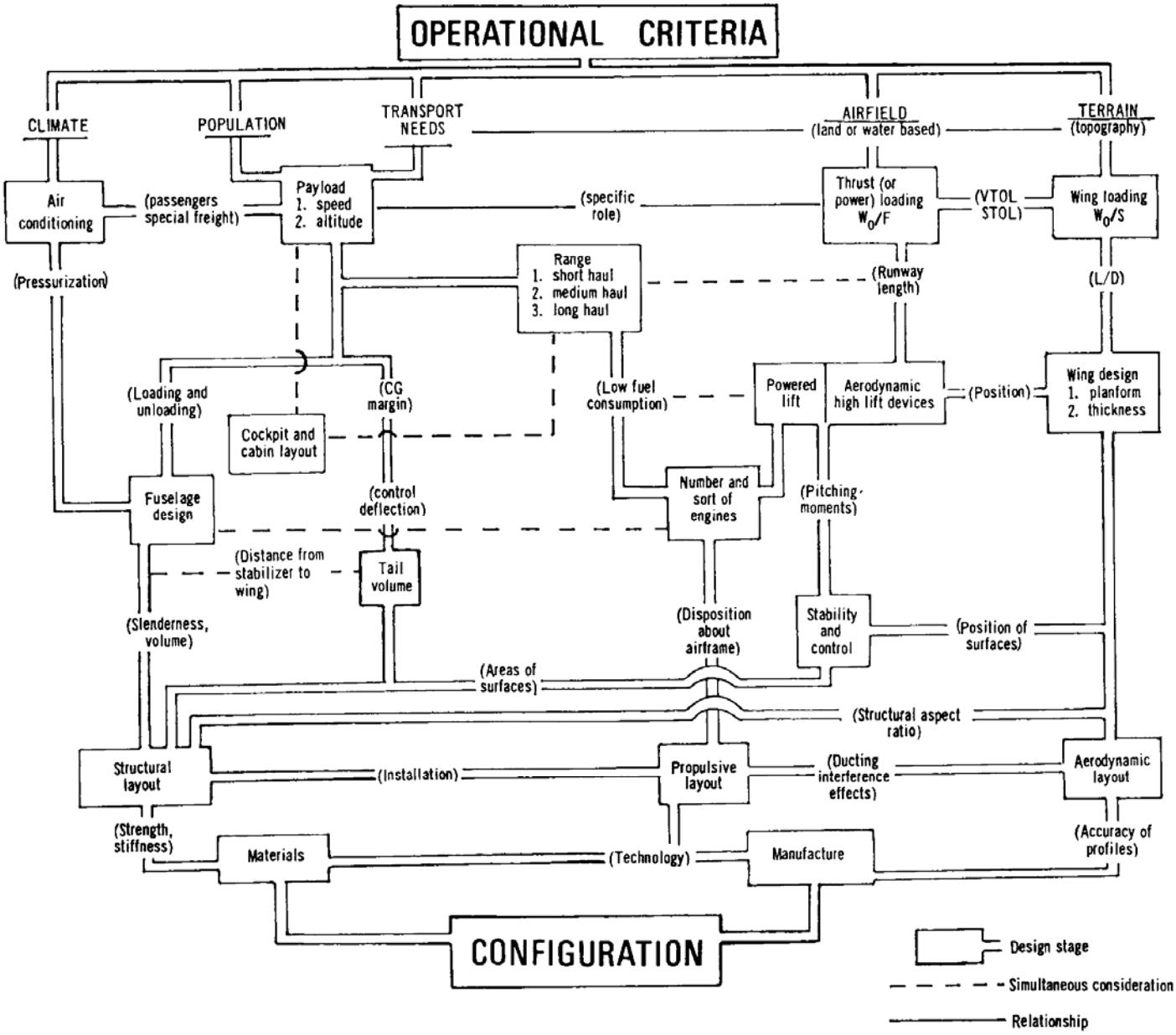

Fig. 3.1 Influence of operational criteria on final configuration.

As soon as the criteria are listed, however, they lead one to look into more specific aspects of design — the prime influence of payload, and of disposable load as a whole, upon the range of an aeroplane — and at break-even load factors, and economics as applied to aeronautics.

Payload

Versatility in type and distribution of payload has an important bearing upon ability to achieve high load factors (roughly: payload carried/payload that could be carried). An aircraft should have an inboard profile that allows the maximum payload volume to be used all of the time. If there is such scope, then loading is less of a problem — although large movements of the centre of gravity, or **CG**, can be expected. Large trimming surfaces will be needed for stability, and the stability requirements must be balanced against the need for maneuverability. In this respect the aeroplane scores over the helicopter in terms of stability, but not in maneuverability.

Passenger aeroplanes usually seat 4 or 5 abreast. Ideally a cabin should be high enough for a man to stand erect, but much depends upon the role of the aeroplane. An aircraft intended for fairly short duration flights is less likely to require such a high cabin than one designed for flights of several hours. Similarly, long distance aircraft must be designed to cater for the more exacting needs of the hard-to-please passengers of the developed countries, but some reduction in average standards of passenger comfort can be tolerated for low-cost transports designed for short block times (total time taken from start to stop), e.g. 50min for a 250-mile stage.

Freighter aeroplanes must carry pre-packaged loads, as well as comparatively heavy and bulky equipment of many kinds. Large and accessible freight holds are needed with ample room for manhandling

awkward loads. Ideally there should be provision for nose and tail loading, so that one load can be rolled from the rear of the hold as the other is rolled into the front. However, the arrangement is often hard to achieve without recourse to swing-noses and tails, which are inevitably more complicated than simple doors.

Payload-range and productivity

A basic criterion of transport operational requirements is the distance, the range, that a given payload can be carried. This criterion, called the payload-range is defined as

Payload-range = payload x distance, ton-miles (3-1)

and Productivity = payload X block speed, ton-miles per hour (3-1a)

The weight of fuel + payload with which an aeroplane can take-off is called the disposable load. Additional fuel is carried for emergencies.

For a given disposable load, payload and range are interchangeable to a certain extent. Neglecting, for the moment, the effect of improved propulsive efficiency and improved lift/drag ratio upon range-flying ability as the aeroplane grows lighter; and assuming that the disposable load can be carried entirely as fuel, then the distance flown for any quantity of fuel burnt is as shown in Fig. 3.2(a). The slope of the graph is a function of the lift/drag ratio, which is the measure of aerodynamic efficiency. The less the drag the further an aircraft flies on a given quantity of fuel.

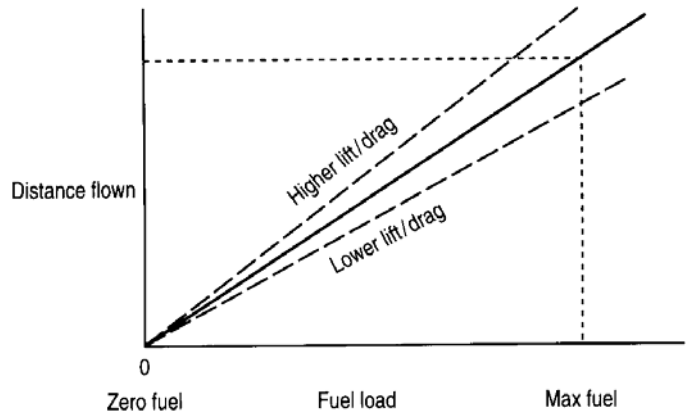

(a) Range flown against fuel carried.

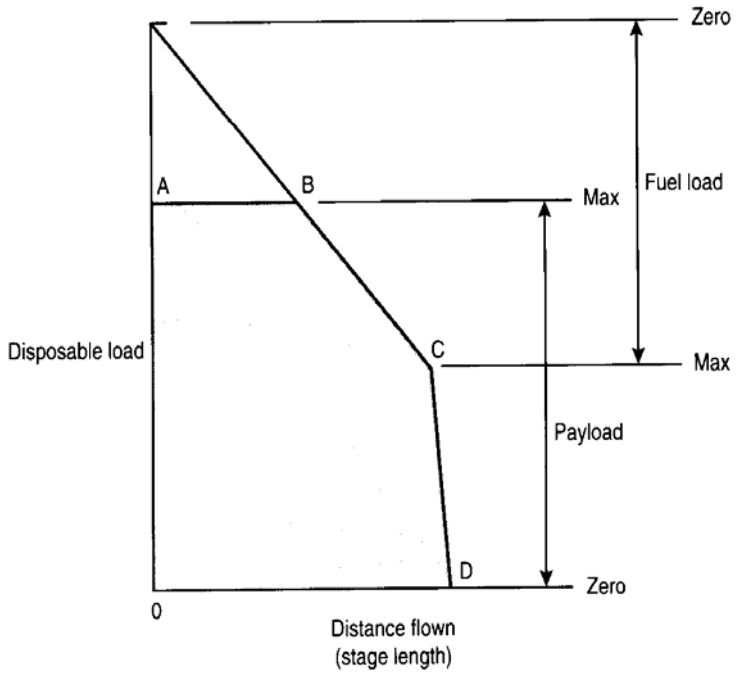

(b) Typical disposable load : range relationship.

Fig. 3.2 Disposable load and payload-range.

In practice there are restrictions to the exchange between payload and fuel weights. Fuel can be carried within thin wings, but passengers cannot. Fuel should not be carried in the fuselage along with passengers. Figure 3.2(a) therefore becomes modified by:

(a) The maximum payload, by weight as well as volume, that can be carried within the fuselage.

(b) The total amount of fuel that can be carried within the structure. Fuel carried in the wings relieves the bending loads at the wing roots and enables a lighter structure to be built.

The modified figure is as shown in Fig. 3.2(b). It should be noted that the range is now shown along the base of the graph, as Fig. 3.2(a) has been rotated. Point B is the hardest to place, as it is fixed by the structure weight and this in turn depends upon the disposition of fuel tanks, engines and the type and position of the undercarriage units, among other things.

The line A—B marks the cut-off, by volume or weight, of the payload that can be carried. Point C marks the maximum distance that can be flown with the fuel carried: clearly it would be uneconomical to design for maximum range with the maximum payload. The line C—D marks the slightly increased ranges that may be flown with the full fuel load, by reducing the payload carried.

The total weight of an aeroplane is made up of the weights of the payload, structure systems, equipment, fuel and engines. These can be put together mathematically as:

$$W_0 = W_A + W_E + W_F + W_P \quad (3\text{-}2)$$

where

W_0 = all-up weight, lb;

W_A = equipped airframe weight, Ib;

W_E = powerplant weight, Ib;

W_F = fuel weight, lb;

W_P = payload, lb.

Although the sum is simply stated, most of the components are interdependent. For example, one may not alter a design to carry more fuel without having to increase the fuel system weight and also the structure weight (unless the fuel can be so placed along the wings as to give bending relief — one of the reasons for podded overload tanks suspended beneath wings and wing-tips). Similarly, one may not 'stretch' a design to carry more passengers without also increasing the weight of structure, furnishings, fittings and allied equipment and, hence, the equipped airframe weight. The equipped airframe weight is composed of the structure weight, the weights of the fuel system and power services and equipment, and the weights of furnishing and other fittings for the payload.

The proportion of the all-up weight taken by the payload is quite small in all but the shortest range aircraft: that of a subsonic transport is of the order of 10%, while that of a supersonic transport may be around 5%. It is salutary to remember that the bumblebee, which is extremely efficient as a flying-machine, is said to carry a payload around 46% of its all-up weight over considerable distances.

Economics

Operational requirements must always take account of the economic health of a country. In aeronautical affairs this depends upon the health of a country's industry. The criterion of a sensible operational requirement, an OR, is that it must result in an aircraft that will pay for itself with the returns that it brings, either financially or in increased security.

The economics of an aeroplane can be viewed as a pair of scales. On one side is the cost, on the other is what can be afforded. The amount of money to be spent on a project has three aspects:

(1) The first arises from the designer and manufacturer, their choice of layout, power-plants and equipment.

(2) The second depends upon the financial policies of the government, and upon its long and short-term interests. A typical example might be the favoring of a design by a manufacturer situated in an industrially depressed area, even though that design might not satisfy requirements to quite the same extent as one from another area.

(3) The third aspect arises from the operator himself who has his own specialized needs in mind, and who often has to compete in a cut-throat market with small margins for error close to the limits of his knowledge.

It may be that although a designer might specify a certain engine when discussing a project with an operator, the operator himself wants another engine, not quite as well matched to the design, but with exceptionally good economics and reputation. Similarly, the operator often specifies a particular type of equipment to be carried. Hence the designer must be a mixture of diplomat, mentor and psychologist in his dealings with a potential operator. Also the potential operator must ensure that his requirements are so couched that the resulting aeroplane will be right for as many other buyers as possible, for the best way of ensuring that prices

are kept down is through financial load-spreading over a wide market.

The most useful way of comparing the economics of aeroplanes and of weighing the merits of a project in meeting a set of requirements is to study the operating costs. These fall into two categories: direct operating costs, which depend directly upon the physical characteristics of the aeroplane, and indirect operating costs which, although depending in part upon the physical characteristics, depend much more upon the service offered and the circumstances of the operator. The first is the sum of all costs of flying and maintenance, together with insurance, obsolescence and depreciation of airframe, engines and equipment. The second criterion arises from the attraction of traffic and general administration. However, unit costs, which are the costs per ton-mile (calculated by dividing the total hourly cost by the block speed and the payload) give an immediate measure of the commercial efficiency of an aeroplane, and may often be used instead of direct operating costs (see Eqn 3-la).

The break-even point

If seats or capacity are sold on an individual basis at a fixed rate, then a percentage of seats or capacity must be sold in order that the net revenue equals the cost of the operation. The percentage of seats or capacity is called the break-even load factor. There are a number of break-even points with which we are not concerned here. The total break-even point is shown in Fig. 3.3.

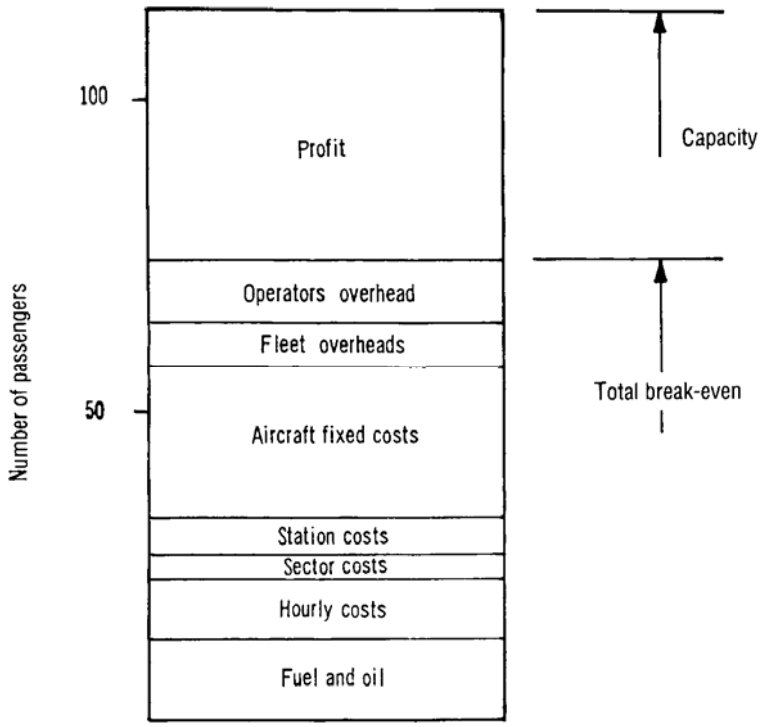

Fig. 3.3 Capacity and the total break-even point.

The break-even points are not constant for any particular aircraft type. In computing break-even points all costs (including financial charges) must be taken into account. These vary with stage lengths and different routes and should, therefore, be considered as an important part of any operational requirement where they are relevant to the aircraft concerned.

Airfield requirements

The airfield requirements affect the design of an aeroplane in the following important ways:

(a) Take-off distance available, TODA, and take-off run available, TORA. The distances can usually be reduced by using more powerful engines, although this results in the aircraft being overpowered when cruising and using more fuel than is necessary during that stage of the flight.

(b) Landing distance available, LDA, and emergency (stopping) distance available, EDA. The landing distance is reduced by fitting high-lift devices to the wings, to enable the aeroplane to land at lower forward speeds. If cruising performance is not the most important criterion, then larger wings may be used.

(c) Runway and taxiway strength. This affects the design of landing-gear: the number of wheels and types of tyres to be used.

(d) Noise restrictions. The higher the thrust and power loading (Eqn 4-8 onwards) of the engines, the flatter is the climb-out path and, the longer does take-off noise disturb those on the ground.

If one is to design an aeroplane for shortened take-off and landing distances, then there is an inevitable increase in the all-up weight. The weight increase is brought about by increased size of engine to generate the necessary power, and the addition of high-lift devices and their attendant mechanisms. Figure 3.4 shows a typical all-up weight trend for a turboprop aircraft designed to carry 60 passengers 1,000nm at 350 knots. The balanced field length is the distance in which the aircraft can be brought to rest in the event of an abandoned take-off, when this is equal to the take-off distance available; or take-off run available (including any clearway and stopway).

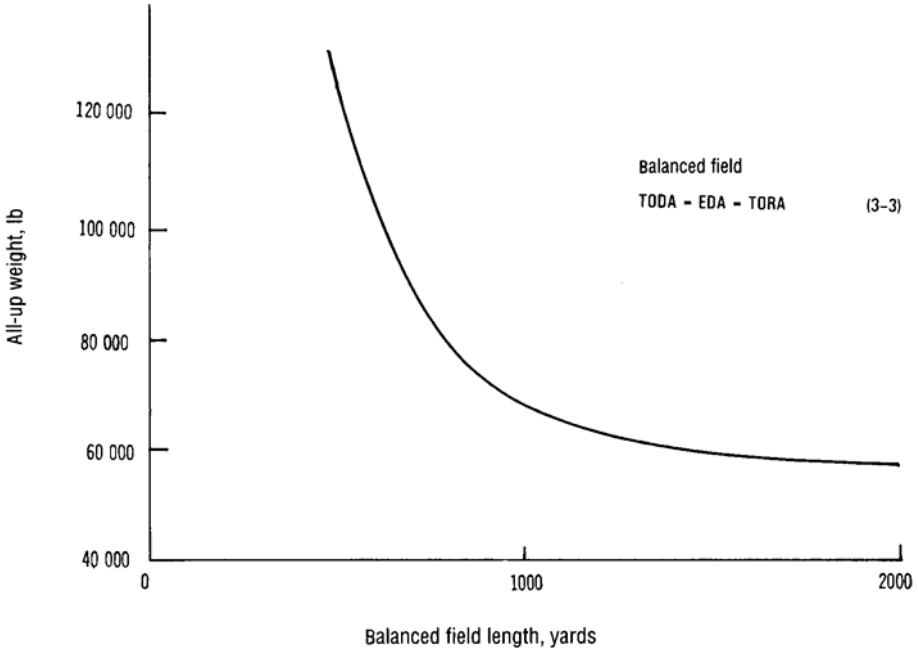

Fig. 3.4 Typical relationship between aircraft all-up weight and airfield size for a turboprop transport carrying 60 passengers 1,000 nautical miles at 350 knots.

3.2 Design requirements

The act of designing an aeroplane is governed by stringent regulations that ensure, as far as is theoretically possible, that the aircraft will be well behaved and safe in practice. The regulations have been introduced for all classes of aircraft and lay down certain minimum standards with which their designs must conform.

In Britain sources of requirements are those for civil aeroplanes, embodied in British Civil Airworthiness Requirements (BCARs) and European Joint Aviation Requirements (JARs). The Military has its equivalent UK Def Stan of the MoD. American equivalents are US Federal Aviation Requirements (FARs) and, for military aircraft, US Mil Specs. Their scope embraces all operational functions, and they cover the following broad aspects:

(1) The comfort and safety of passengers and crew. Guidance is given as to the placing of controls, the design of seats, and the adequacy of the pilot's view and other allied matters.
(2) The flying qualities of the aircraft, both in pilot handling and in performance.
(3) Considerations of basic engineering design, strength and stiffness. These considerations are intended to ensure that the aeroplane will operate safely in the design role without danger of structural failure.
(4) The installation of engines, fuel and oil systems, and various other power systems and services.
(5) Servicing and reliability to ensure efficient operation and a reasonable life.
(6) Flight testing by the manufacturer before an aeroplane is delivered to the operator, or before the delivery of a new type to a test establishment.

Compliance with civil requirements also ensures that an aircraft satisfies the corresponding standards of airworthiness of the International Civil Aviation Organization (ICAO).

Only when every consideration of precise performance and every detail of engineering design have been approved, does a civil aeroplane receive a Certificate of Airworthiness, or C of A. There are several categories of the certificate and it must be renewed whenever an aeroplane is modified.

3.3 The specification

Specifications arise from requirements and amount to rational statements of what is wanted in an aeroplane so that it may best satisfy the requirements in terms of what is possible at the time. The specification must always

take account of the current state-of-the-art of aeronautical technology and practice.

The specification is the yardstick against which the resultant aircraft is measured. In theory it is drawn up by the customer before submission to the manufacturer, but in practice there is an increasing tendency to write the specification as the aircraft is progressed through the various states of design and construction. The practice is inevitable as advanced aeroplanes must be planned well ahead of the time they are due to be used operationally. In that time there may be large attendant changes in technology as research and development precede design.

Because specifications are practical documents one finds that the clean lines first drawn by the designer are greatly altered by what is achievable in practice. The real aeroplane also grows heavier than was at first estimated. Figure 3.5 shows a variety of changes that appear between the first sketching of an aeroplane and the emergence of the production version. In this example the aircraft is the Avro Vulcan, designed to a specification formulated by the British Air Staff in 1946 which led to the V-bombers used by the Royal Air Force into the 1980s.

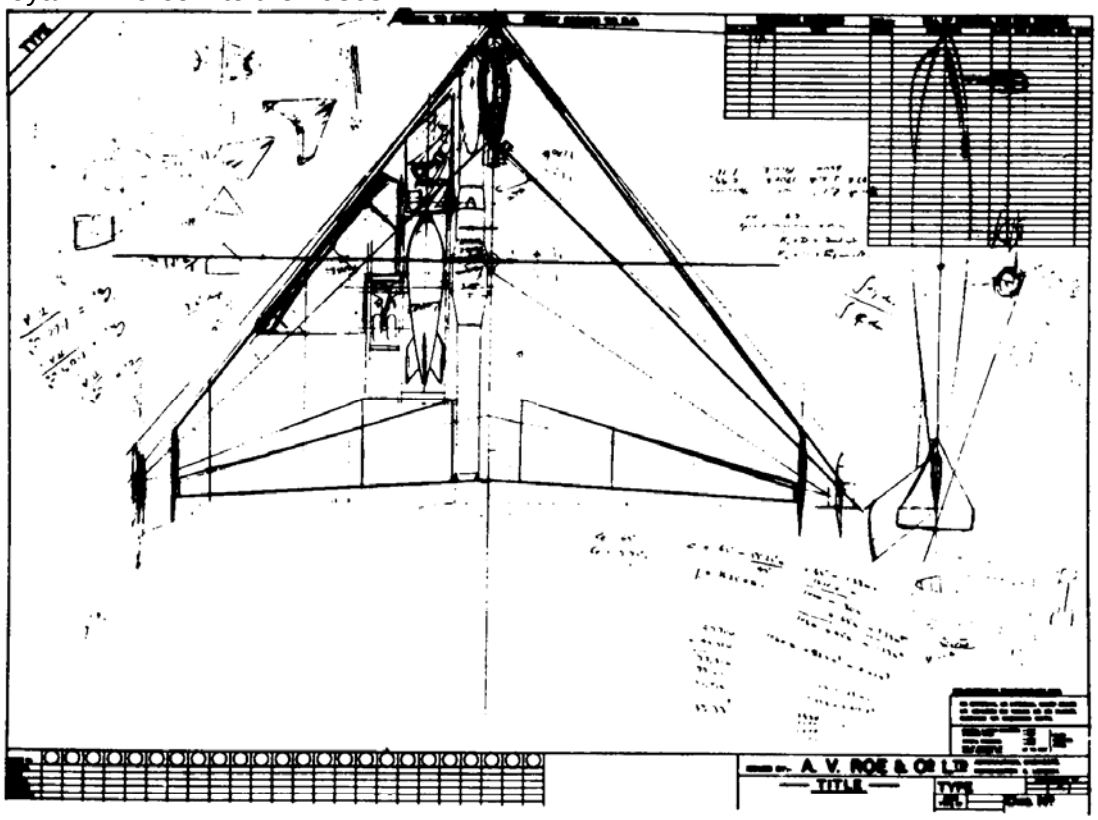

(a) An historic sketch, believed to be the very first Avro 698 delta drawing, by the late Roy Chadwick and his team.

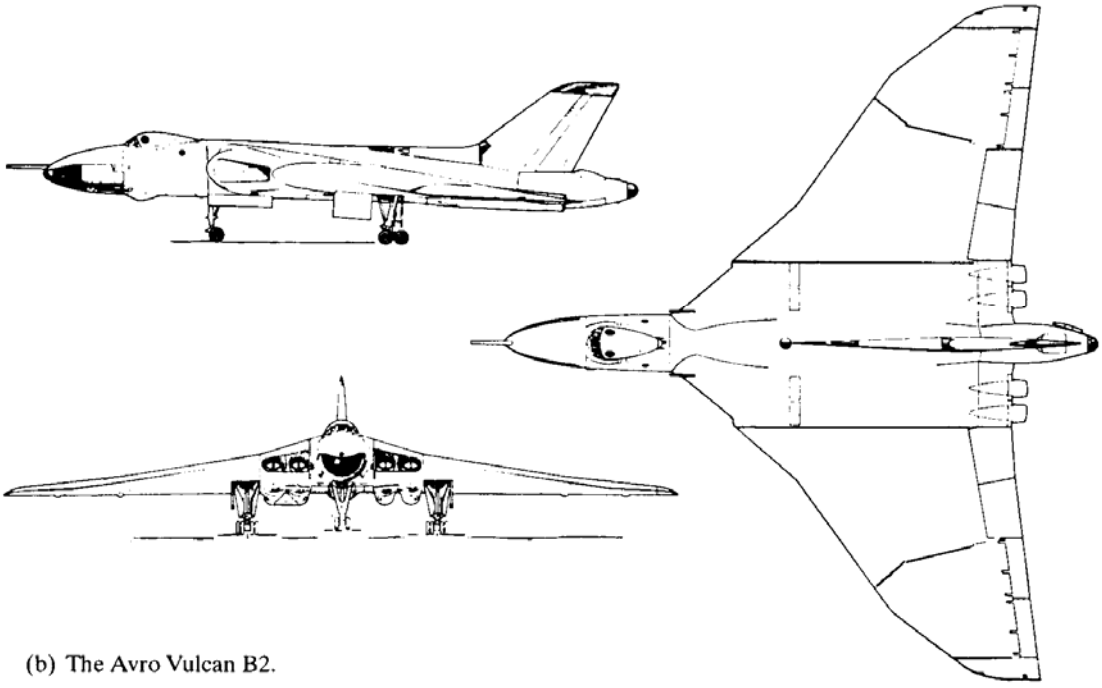

(b) The Avro Vulcan B2.

Fig. 3.5 The emergence of an aeroplane in response to a specification.

The contents of a specification are normally agreed before signing the contract between the manufacturer and his client. After that, the responsibility of meeting the specification is in the manufacturer's hands. The specification is a precise document and failure to meet it by only a fraction can result in penalty payments under the guarantee. It is more usual for civil operators alone to lay down such limits as military aeroplanes involve too many political considerations to make the exacting of penalties a reasonable proposition.

Generally speaking, the smaller the tolerances by which a design might be allowed to fall short of what is required, and the greater their number, the more expensive will be the eventual aeroplane. The tolerances are set by the operator, typical examples being:

(1) Range within ±3 to 5% at optimum range-speed.
(2) Maximum speed within ±3%.
(3) Equipped airframe and structure weights within ± 2 or 3%.
(4) Take-off and landing distances within ±5 to 7%.
(5) Noise levels no more than 2 or 3 decibels above that specified.

The tolerances usually include upper and lower limits, although one of them represents a bonus for the operator. If the bonus is too large, however, one should suspect that some other quality of the design has suffered.

Occasionally one still finds a specification being written around a completely new aircraft that has been designed and built as a private venture. Such was the practice on several notable occasions before World War II. Two of the most famous aeroplanes so designed were the Supermarine Spitfire and the de Havilland Mosquito (Fig. 6.25). Apart from the private venture, the specification gives the designer his first ideas of how big and how heavy the eventual aeroplane will be. We shall, therefore, now look at some of these aspects of interpreting the requirements that determine what form the configuration will take.

Chapter 4 Interpretation of Requirements: the Beginning of an Aeroplane

Before the first outline of an aeroplane can be sketched three questions must be considered, although they are probably never posed consciously at the same time:

(1) What priorities should be singled out from the operational requirements, e.g. is the aeroplane a heavy weight-lifter, or for flying long ranges with moderate payloads?
(2) What might be achieved within the present state-of-the-art?
(3) How far might the basic design require future development beyond the present requirements. In other words, might the basic requirements be expected to change very much with time?

The answers to these questions all depend upon the required performance. In order to appreciate the answers it will help to look at some of the design parameters affecting the performance of an aircraft.

4.1 Forces acting on an aeroplane in flight

Figure 4.1 illustrates a number of the performance modes that might be encountered during a typical supersonic sortie.

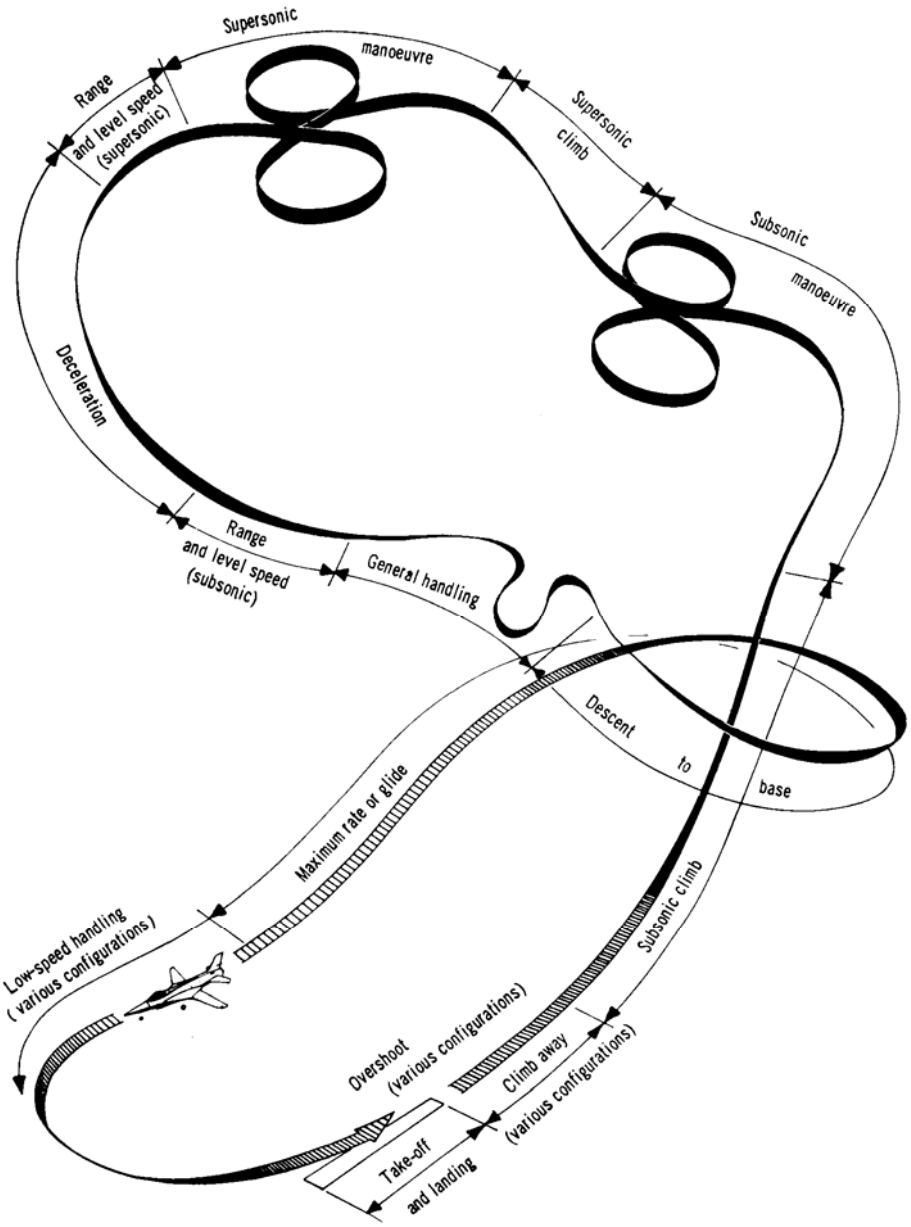

Fig. 4.1 Performance modes.

The motions of the aeroplane in the various modes are of two kinds: rectilinear and curvilinear. The first is motion in a straight line, without accelerations applied normal to the line of flight. The second is motion along a curved flight path due to applied normal acceleration; this is termed maneuvering and is of great importance because the magnitude and direction of the normal accelerations directly affect the structural design.

In order to move and maneuver, a system of forces must be set up in such a way that it can be controlled at will, with the minimum of delay. Movement is a function of applied power, through the propulsion system and the aerodynamic controls. Maneuver is a function of the response to applied power, and this depends upon the size and weight, the distribution of weight throughout the airframe and the stability of the aeroplane.

(picture)
Plate 4-1 BAe/Aerospatiale Concorde on landing, showing that separated leading-edge vortices have such intense suction in their cores that moisture in the air is condensed by the drop in pressure, forming transient cloud. Their origin is shown in Fig. 5.1 (see also Appendix D).

4.1.1 Unaccelerated (rectilinear) flight

In its passage through the air an aeroplane sets up a pressure field, due to the reaction of the air over the whole airframe surface. The pressure acts at right angles to the skin contour at any point, but the pressure can be resolved into components normal and tangential to the line of flight, taken in the plane of symmetry of the aircraft. Those normal to the line of flight, when summed, give rise to the resultant lift, L. It should be noted that lift is contributed to by the whole airframe and not the wings alone. The tangential components, when summed, give rise to the resultant drag, D. The nature of lift and drag is considered in some detail later.

In powered flight the drag is opposed by the net propulsive force, F. This is the resultant force generated by the propulsive system after the sum of the gross thrust of the engine, the internal drag of the propulsive system, and the inclination of the thrust line to the line of flight have all been taken into account.

The final force in the picture is the weight of the aeroplane, W, acting through the centre of gravity. Figure 4.2 shows the simplified system of forces, all acting through the **CG** at this juncture, in unaccelerated flight. It should be noted that the lift is only equal and opposite to the weight in straight and level flight. When climbing and descending the lift component is less than the weight.

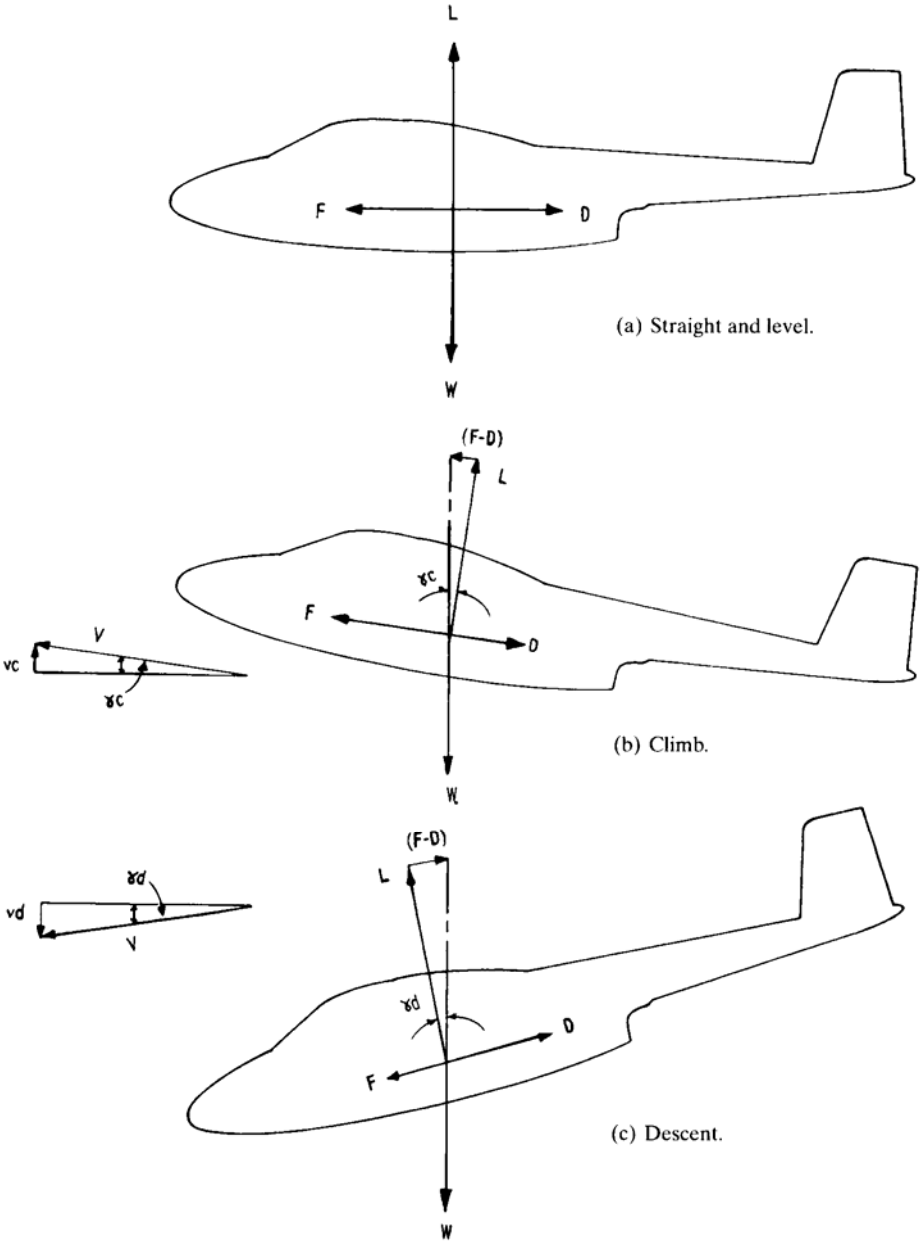

Fig. 4.2 Simplified force diagram in unaccelerated flight.

In Fig. 4.2(a) and (b) two velocity diagrams show the relationship between the angles of climb and descent, γ_c and γ_d and the rates of climb and descent, v_c and v_d. These are given with respect to the TAS, V. However, it should be noted that v_c and v_d are usually given in ft/min, which involves an adjustment of V from the usual form of knots or miles per hour. In the metric and SI systems we employ m/s. (See Units, Tables 1 to 4.)

From the force and velocity diagrams we see that in straight and level flight:

$F = D$ (4-1)

$L = W$ (4-2)

When climbing and descending, however, the force vector balancing the weight is composed of two components: the lift (which, as we have observed, is less than that in straight and level flight) and the resultant of (F - D), such that

$$\gamma_c = \sin^{-1}\frac{(F-D)}{W} \qquad (4\text{-}3)$$

whence $$v_c \text{ or } v_d = \frac{(F-D)}{W}V \qquad (4\text{-}4)$$

the sign, which differentiates v_c from v_d being determined by the sign of (F - D).

In the case of gliding flight, when the net propulsive force is zero, the rate of descent can be approximated, from Eqn (4-2), to

$$\text{gliding } v_d = -\left(\frac{D}{L}\right)V \qquad (4\text{-}4a)$$

when the angle of glide is very shallow. Hence, the gliding efficiency of a sailplane depends upon achieving the highest possible lift/drag ratio, (L/D). Although a sailplane or glider descends constantly through the air, it will climb away from the ground as long as the air is ascending with a velocity greater than v_d. Lift/drag ratios greater than 60:1 are now common.

4.1.2 Accelerated (curvilinear) flight

Although an aircraft may be in accelerated flight when changing speed along a rectilinear path, here accelerated flight applies to the special condition of changing direction, which involves a component of acceleration normal to the flight path. Curvature of the flight path is achieved by changing the magnitude and direction of the lift component away from the equilibrium condition of Fig. 4.2(a). The change can be brought about either by a change of speed, or a change of the angle of attack, $\Delta\alpha$, of the aeroplane to the relative airflow.

Figure 4.3 illustrates the simplest maneuver mode, that of level turning flight, in which the angle of attack is increased by movement of the control surfaces.

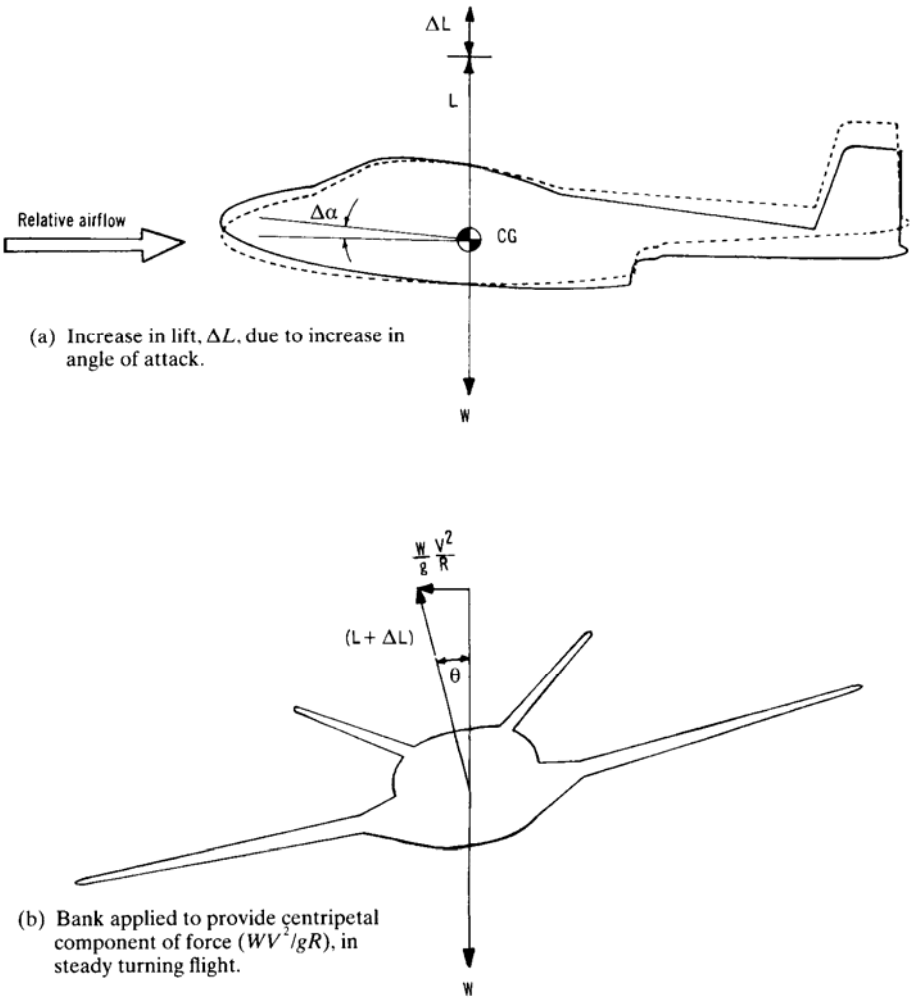

Fig. 4.3 Simplified force diagram in a steady turn, an example of accelerated flight.

An increase in engine power is needed to maintain speed by countering the increased drag, while the aeroplane is banked until the vertical component of the new lift is equal and opposite to the weight. If θ is the angle of bank, then the radius of turn is given by:

$$R = \frac{V^2}{g \tan\theta} \qquad (45)$$

where R = radius of turn,

g = gravitational constant,

V = TAS, reduced to a velocity,

θ = angle of bank.

The normal acceleration is given by the ratio of the lift/weight, L/W. The more steeply banked the turn, the more the lift that is needed and the higher the normal acceleration (commonly referred to as 'g'). Accelerated flight involves more than turns alone and includes: stalling, which is a loss of lift through a breakdown of the airflow over the lifting surfaces; spinning, which is rotation of the aeroplane about its axes when the lifting surfaces are stalled asymmetrically. Similarly rolls, pull-ups, push-overs and their various combinations produce normal accelerations for which the designer must cater, if they lie within the requirements. Additionally, accelerated flight results from horizontal and vertical gusts which, in being associated with atmospheric turbulence, are of critical importance at high speed. It may be shown that the resulting normal acceleration varies with TAS and inversely with wing loading (the weight of aircraft carried per unit wing area). For that reason low-level strike aircraft (like the TSR.2 in Fig. E-4) have small, short wings.

4.1.3 Flight loads

During flight an aeroplane is subjected to a wide range of combinations of normal accelerations, speeds and altitudes. The normal method of measuring acceleration is to call the straight and level case zero, describing applied accelerations as +ve and -ve about it. The aeronautical engineer differs in his approach, calling the straight and level case ig and meaning that the inertia force to which an object is subjected in this condition is 1.0 times its weight. Table 4-1 is self-explanatory:

Table 4-1

Case	Normal method of expressing acceleration	Aeronautical method	Lift ÷ weight of aeroplane	Inertia force on weight ΔW
Free fall	$-1g$	0	0	0
Level flight	0	$1g$	1	ΔW
General	$(n-1)g$	ng	n	$n\Delta W$

The V—n diagram

There are two significant families of curves, referred to generally as V—n diagrams that are used to represent the limiting combinations of speed and normal acceleration for which an aircraft must be designed. The first, the basic maneuvering envelope applies to symmetric flight, i.e. flight in which the aircraft is not yawed at an angle to the flight path when, for example, an engine has failed. The second, the basic gust envelope applies to symmetric flight in vertical gusts. A gust alters the angle of attack of the lifting surfaces by an increment $\tan^{-1}\frac{W}{V}$, where w is the vertical gust velocity. As the lift is a function of the angle of attack, the inertia forces applied to the structure by maneuvering are altered by the gust conditions. Typical diagrams are shown in Fig. 4.4. The basic maneuver envelope corresponds for a civil aircraft with Table 4-2.

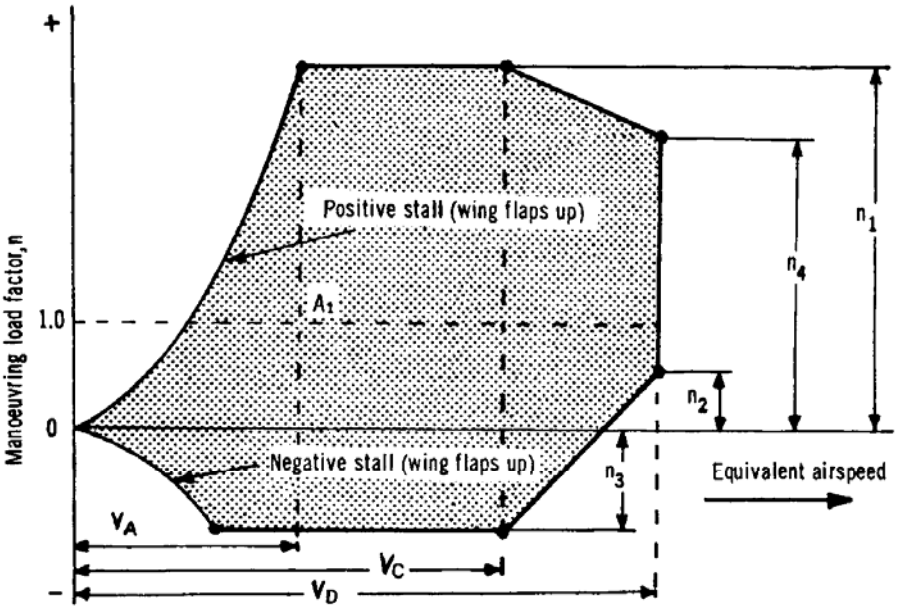

(a) Basic manoeuvring envelope.

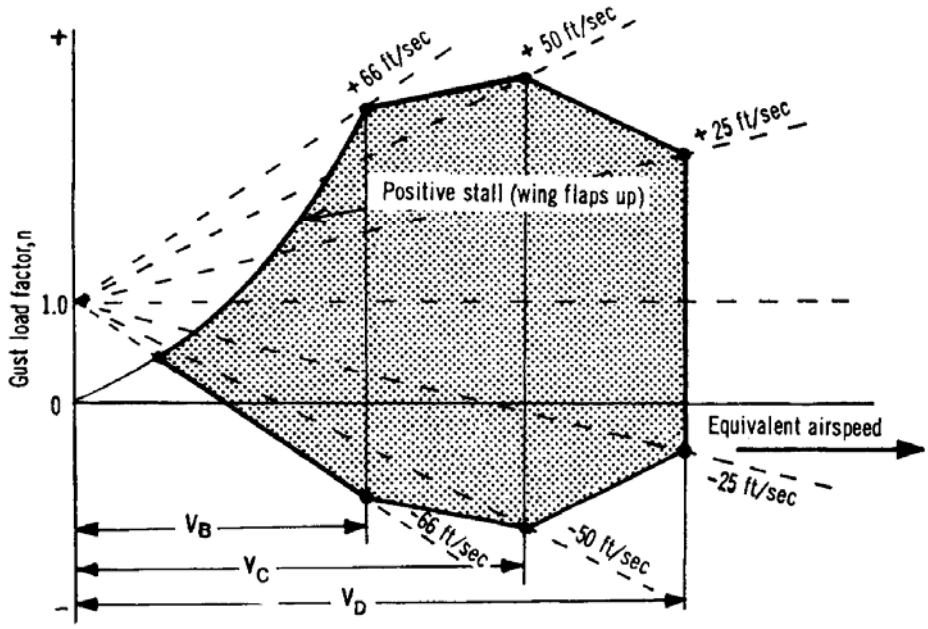

(b) Basic gust envelope.

Fig. 4.4 Typical V—n diagrams.

Table 4-2

Load factor (i.e. inertia) force)*	Category		
	Normal	Semi-aerobatic	Aerobatic
n_1	$2.1 + \frac{24000}{W_0 + 10\,000}$ but n_1 need not be greater than 3·5 and not less than 2·5	4·5	6·0
n_2	0	0	0
n_3	1·0	1·8	3·0
n_4	0·75 n_1 but not less than 2·0 2·5	3·5	4·5

W_0 . . . lb . . . is design all-up weight.
* See Fig. 4.4(a).

4.2 Performance

The performance of an aeroplane depends upon the degree to which a designer can:

(1) Achieve combinations of excess lift and net propulsive force (thrust) over weight and drag.
(2) Stabilize and control the combination of forces throughout the flight envelope.

Both lift and drag depend upon the aerodynamic design of the aeroplane. The choice of powerplant depends upon the flight regime. The weight depends upon both the aerodynamic design and choice of powerplant. The stability and control of the machine depends upon flight regime, aerodynamic design and powerplant arrangement. Clearly then, the performance is seen to depend very much upon the propulsion system: a term used here to include any mechanical means of moving or supporting an aeroplane in flight.

4.2.1 Powerplant choice

All propulsive systems perform the same basic function of transforming the heat energy of fuels into propulsive thrust. The development of an aircraft engine depends, perhaps more than anything else, upon the availability of a fuel suited to the particular function of the engine. Air-breathing engines use the ambient air for oxidizing the fuel and, therefore, can only be used up to heights where there is enough air to support combustion. For practical purposes the limit is around 100,000 ft. Air-breathing engines develop thrust either by means of a propeller, or by the ejection of combustion gases in the form of a jet. The two basic types of air-breathing engine are the reciprocating (or piston) engine and the gas-turbine. The rocket carries the oxidant needed to release the energy of the fuel. Although the rocket is, therefore, unlimited by ambient conditions, the weight of oxidant required makes the use of the rocket prohibitive for any aircraft that must fly for more than a few minutes.

Later in the book we will be concerned with aspects of powerplant installations, that affect the aerodynamic and structural design of aeroplanes. For the present it is enough to note the broad propulsion picture illustrated in Fig. 4.5, in which the general flight envelopes of each type of powerplant are shown.

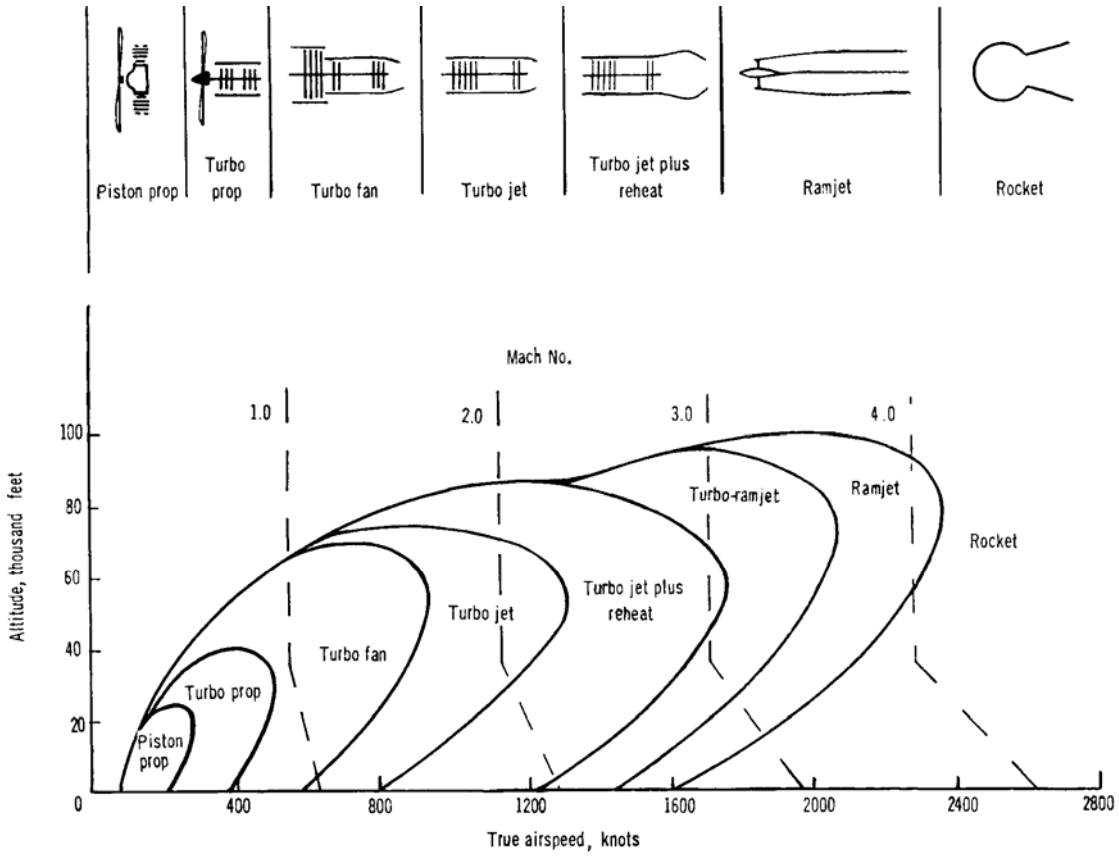

Fig. 4.5 The level flight propulsion picture.

Powerplant performance

Powerplant performance has 3 important aspects: the net thrust produced per pound of dry engine weight; the net horsepower produced per pound of dry weight; and the thrust specific fuel consumption.

The net thrust of the engine (for small inclinations of the thrust line to the line of flight sensibly equal to the net propulsive force) is the usable thrust when installed. Figure 4.6(a) shows typical values of net thrust/lb dry weight for a number of powerplants, and these curves should be related to Fig. 4.5.

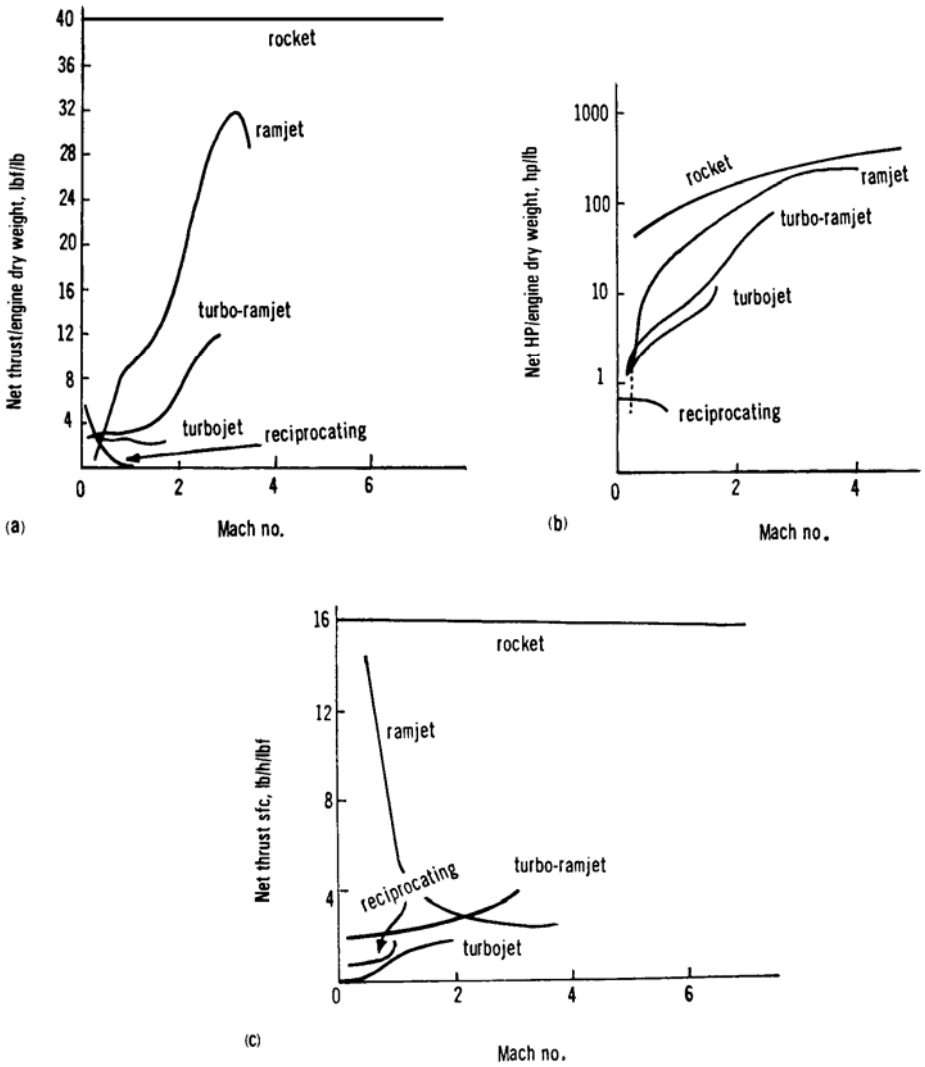

Fig. 4.6 Comparison of typical performance characteristics of several different powerplants.

The net horsepower of the engine is proportional to the net thrust multiplied by the velocity of flight; it is useful in that when compared with the drag horsepower one obtains a measure of the residual power left over for doing work, either by changing altitude or increasing speed. Figure 4.6(b) shows typical values of net horsepower/lb dry weight.

The overall efficiency of a propulsion system is indicated by the specific fuel consumption, defined as the number of pounds of fuel used to produce one horsepower for one hour. In the case of gas turbine engines, which may be used over large bands of speed and height, the mass flow through the engine changes markedly with environment. It is therefore more useful to use the thrust specific fuel consumption, the weight of fuel needed to maintain unit thrust for one hour. Figure 4.6(c) shows typical values of thrust sfc in lb/h/lbf.

4.2.2 Basic performance

Basic performance problems are concerned with the general cases of changing speed and height, i.e. with acceleration, level speed, climb and descent.

Energy height

Basic performance may be conveniently treated in terms of an equation expressing the rate at which the total energy of an aeroplane is being changed. At any instant the total energy is the sum of the potential and kinetic energies:

$$E_h = W\left(h + \frac{V^2}{2g}\right) \qquad (4\text{-}6)$$

where E_h = total energy at a given speed and height,
h = height above mean sea level,
g = gravitational constant,
V = TAS, expressed as a velocity,

W = instantaneous weight of aircraft.

The term in brackets is usually called the energy height, because it has the dimensions of length and is a measure of the total energy per unit weight of aircraft. The energy height is denoted by the symbol h_e, where

$$h_e = \left(h + \frac{V^2}{2g}\right) \qquad (4\text{-}6a)$$

Now, power is the rate of employment of energy with time so that on differentiating Eqn (4-6) with respect to time we have

$$\frac{d}{dt}(E_h) = W\left(\frac{dh}{dt} + \frac{V}{g}\frac{dV}{dt}\right) \qquad (4\text{-}6b)$$

However, dh/dt is the rate of climb, v_c (or of descent v_d) and dV/dt is the acceleration (or deceleration), *a*, of the aircraft along the flight path. Furthermore, as power is equivalent to the rate of doing work, we may say that the power of the aeroplane when flying at a given speed is

$$V(F - D) = W\left(v_c + \frac{Va}{g}\right)$$

i.e. $$(F - D) = W\left(\frac{v_c}{V} + \frac{a}{g}\right) \qquad (4\text{-}7)$$

From this it can be seen that the residual propulsive force (the net propulsive force minus the drag) of the aeroplane can be used to change either the height, or the speed or both. If the net propulsive force is less than the drag, then the aeroplane descends or decelerates.

Very high performance aeroplanes possess high kinetic energies. For this reason they are able to 'zoom climb' to heights that are well above their normal ceilings, by simply exchanging kinetic for potential energy in Eqn (4-6). For example, an aeroplane pulling up into a climb at M = 2.0 and decelerating to M = 1.0 might gain some 15,000ft without the pilot touching the throttle. It follows too, from Eqn (4-7) and Fig. 4.2, that the angle of climb or descent is obtained by dividing through the equation by W, as long as a steady speed is being maintained.

Figure 4.7 illustrates net propulsive force and drag curves of a typical supersonic fighter in level flight.

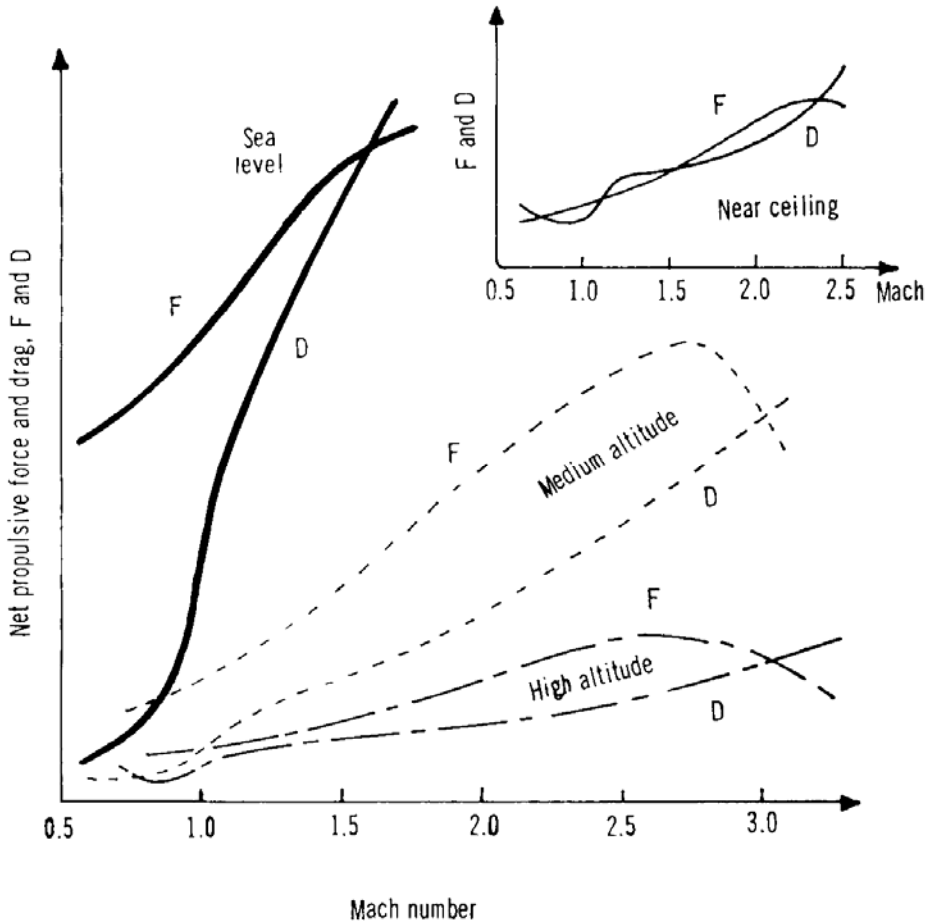

Fig. 4.7 Typical variation of net propulsive force and drag of a supersonic fighter in level flight at different altitudes.

From these may be seen the ways in which (F - D) varies with height in Eqn (4-7). It should be noted that the maximum level speed is determined by the intersection of the curves, the highest values being obtained at the higher altitudes.

Power for flight and wing loading

Equation (4-7) is of particular importance, because we may deduce from it a relationship between the power and the wing area required to fly an aeroplane of a given weight. At constant airspeed Eqn (4-7) becomes

$$(F - D) = W\frac{v_c}{V} = W\sin\gamma_c \quad \text{(from Fig. 4-2(b))}$$

The potential energy of the aircraft is being increased at a steady rate: work is done in drawing the weight of the machine upwards.

The power required, P_e, is equivalent to (F - D)V, the product of the resultant thrust and the airspeed — in fact V is assumed to be the speed of the aircraft in still air, so that it is also the speed relative to the Earth, the ground speed, which is used in dynamic calculations. It we now rearrange Eqn (4-7) as follows:

$$\frac{(F - D)V}{W} = v_c$$

but substitute Pe and $v_c = V \sin \gamma_c$ for the respective sides of the equation, we have

$$\frac{P_e}{W} = V\sin\gamma_c \quad \text{(4-7a)}$$

If the inclination of the flight path to the horizon remains unchanged, then $\sin \gamma_c$ is a constant, and this is the condition in which we wish to determine the minimum power for steady flight. If the angle, γ_c, is shallow — in fact tending to 0 — then the lift L is sensibly equal to the weight, W. Now, it may be seen from Eqn (5-8) that lift is the product of $C_L/2$, a constant fixed by the flight conditions of constant angle of attack and airspeed, and $Q\ V^2S$, which contains the wing area, S, and a pair of airflow terms. The wing loading, W/S, is equivalent to L/S under these conditions, so that transposing Eqn (5-8) and using W in place of L we see that

$$V \text{ varies as } \sqrt{\left(\frac{W}{S\rho}\right)}$$

and Eqn (4-7a), which depends heavily upon (L/D) and, hence, long span, b:

$$\frac{P_e}{W} = k\sqrt{\left[\left(\frac{W}{S}\right)\frac{1}{\rho}\right]} \quad \text{(4-8)}$$

The constant of proportionality, k, between the power and wing loading terms depends upon the lift and drag characteristics of the aircraft at the particular speed and height. The ratio, P_e/W, is the reciprocal of the power loading, at one TAS, V.

If instead of P_e/W we used (F - D)V/W and L/D in place of W/D, Eqn (4-8) becomes

$$\left(\frac{F}{W} - \frac{1}{(L/D)}\right)V = k\sqrt{\left[\left(\frac{W}{S}\right)\frac{1}{\rho}\right]} \quad \text{(4-8a)}$$

where F/W is the reciprocal of the thrust loading and L/D the lift/drag for the particular flight conditions (which improves with increasing aspect ratio and span).

From the last equation we may deduce that

(1) For a given aerodynamic efficiency, (L/D), the lower the wing loading and the longer the span the lower are the power and thrust requirements.

(2) With the propulsive and aerodynamic characteristics fixed, the higher we wish to fly the lower must be the wing loading and the longer the span.

(3) For a given wing loading the higher the aerodynamic efficiency of the wing (really the whole aeroplane, not the wing alone) the lower are the thrust and power requirements.

The thrust and power requirements affect the choice of powerplant and the number of engines to be used.

Although the foregoing arguments have been made in terms of flight at altitude, they apply equally well to the take-off and landing cases, for all airfields have limitations in runway lengths and directions, and the altitude of an airfield affects the performance of aircraft using it. Simply: the smaller the airfield, the hotter the day, and the higher the airfield above sea level, the more the thrust (or power) and the lower the wing loading that must be used for take-off. The airfield characteristics determine the design wing loading of large aircraft.

We see that to achieve high speed, rate of climb and acceleration throughout the flight envelope an aeroplane must have engines developing high thrust. The engine installation must be efficient, while the overall lift/drag must be as high as possible.

4.2.3 Special performance

Take-off and landing, and range and endurance flying are really special performance problems. It is now apparent that to satisfy take-off and landing requirements account must be taken of the size, type, geography, altitude and climate of the most critical airfields from which it is intended to operate. For example, airfields in Russia, the USA and India and Africa pose fewer climb-out problems on the whole than airfields in Western Europe or Greece. Australia has few really difficult approaches to its airfields, while Norway is beset with them.

Take-off

The shortness of take-off depends upon how quickly lift greater than the weight can be generated. Excess lift can be obtained with wing area in excess of that required for cruising, but that is uneconomical. Where cruising efficiency is of secondary importance, large cheap benefits accrue from low wing loadings. Where cruising efficiency is of primary importance one finds aeroplanes fitted with slots, flaps and other forms of high-lift devices. Lifting engines shorten take-off runs still further, but at a high price in fuel consumption.

The generation of lift early in the take-off run can also be achieved by low power and thrust loadings, (W/P) and (W/F), enabling faster accelerations to be made. The two forces to be overcome are due to the inertia of the aeroplane, $a\left(\frac{W}{g}\right)$, and the rolling friction, $\mu(W-L)$,as shown in Fig. 4.8.

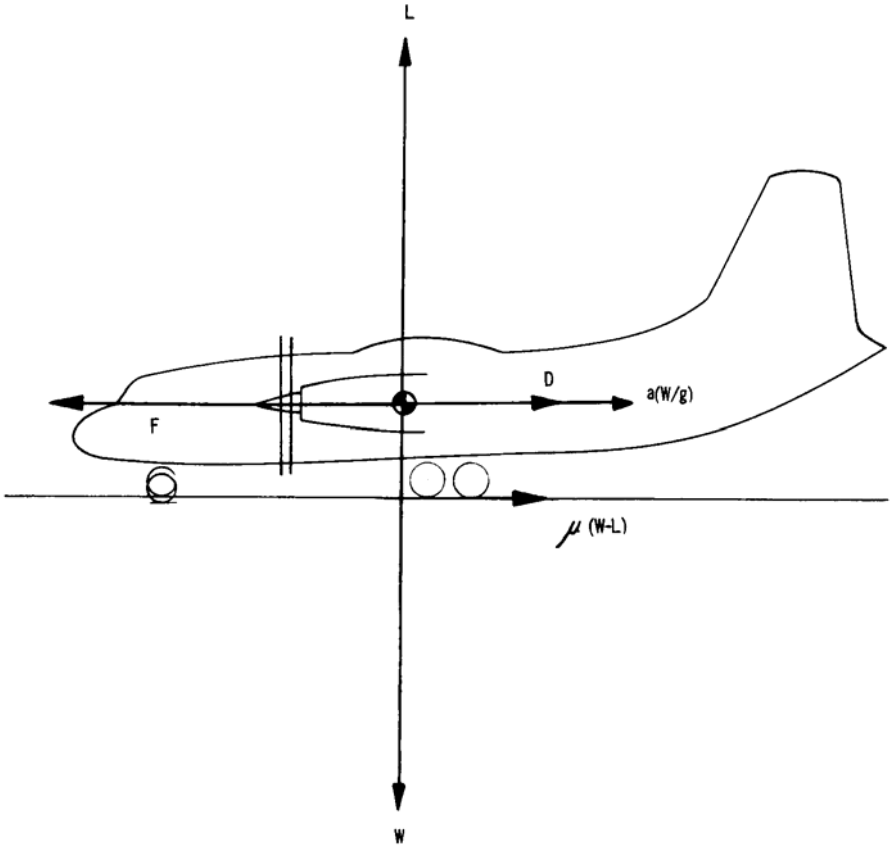

Fig. 4.8 Forces acting on take-off.

As far as the second is concerned, the lift may be increased by the use of flaps and other high-lift devices, and by lengthening the nosewheel leg to set the aircraft at a greater angle of attack and generate a thrust component in the lifting plane. The coefficient of friction, μ, is not only affected by tyre size and tread pattern, but by wheel arrangement. For example, bogie wheels are increasingly common on large aircraft and tandem wheels cause less drag when running through standing water and slush than side-by-side arrangements. Such drag may well prevent the nosewheel from being lifted off the ground, and the aircraft from taking off at all.

Landing

The approach and landing path is similar in all respects to that on take-off, but in reverse. The forces acting on the aeroplane are the same, except that ground drag is increased by the use of brakes and braking parachutes, arrester gear (in the case of naval aeroplanes) and thrust-reversing engine installations.
The steepness of the approach path depends upon the lift/drag ratio. For this reason one finds high drag flaps and air brakes used when landing, but in order to maintain adequate power for emergencies the high drag also

enables the engines to be run at high rev/mm, which reduces their acceleration time to full power.

It is essential that the pilot should be able to change the approach path rapidly. The amount of control he can exercise depends upon the effectiveness of the control surfaces, upon the rate at which lift can be 'dumped' or drag increased by spoilers and flaps, and upon the approach speed itself. The approach speed may be as much as 40% higher than the stalling speed, to give an adequate safety margin. The stalling speed increases as the square root of the normal acceleration, while the lift and effectiveness of the control surfaces increases as the square of the air speed. However, there are limits to the approach speed, which is the most important single parameter governing the ability of a pilot to break cloud after an instrument approach and line up on the runway. One manufacturer has said that it is possible to 'side-step' a transport aircraft more than 100ft laterally at 100k on a 3^0 glide path, with 100 ft between the cloud base and the ground. As the approach speed rises the distance decreases until at 120k the limit of the 'side-step' is about 80ft, at 140k about 40ft and only about 20ft at 160k.

Range and endurance flying

We have already seen that payload-range is a basic operational requirement for most aeroplanes. Let us now consider the design factors, and their particular relationship one with another, which determine how far, or for how long, a projected aeroplane might fly.

Now range, or more accurately the specific air range (the air-miles flown per pound of fuel) multiplied by the fuel available, can be written as

Range = (miles per hour/lb per hour) x (total fuel — fuel needed for other flying) (4-9)

In a turbojet engine, the simplest and most representative unit at this time, the fuel consumption is given by

$$C = c'F \qquad (4\text{-}9a)$$

where c' = thrust sfc,

F = net propulsive force, for our purposes approximately the same as the thrust of the engine.

If the whole of the fuel, WF, could be used for flying range, R, the range could be stated as

$$R = \frac{V}{c'F} W_F$$

However, in level flight:

F= D

and L= W

so that $$R = \frac{V}{c'}\frac{L}{D}\frac{W_F}{W} \qquad (4\text{-}10)$$

or, after converting to Mach number by applying Eqn (1-4) (and see also Section 6.4):

$$R = a\frac{M}{c'}\frac{L}{D}\frac{W_F}{W} \qquad (4\text{-}11)$$

It should be noted that the range is given as a simple ratio of the total fuel weight to some average weight of the aircraft along the stage length. In practice this is hard to calculate and much less useful than the ratio of the total fuel weight to the all-up weight of the aircraft on take-off. We therefore find range more conveniently stated in a form of the Breguet range equation:

$$R = k\frac{V}{c'}\frac{L}{D}\log_e\left(\frac{W_0}{W_0 - W_F}\right) \qquad (4\text{-}12)$$

in which k is a constant to reconcile the units (see also Eqn (4-12) in Appendix B).

We see then that the range of an aeroplane depends upon three parameters: V/c' or M/c', a measure of the speed that can be derived from unit weight of fuel (in effect an indication of the efficiency of the engine installation); (L/D) a measure of the aerodynamic efficiency; and $\log_e\left(\frac{W_0}{W_0 - W_F}\right)$, a measure of the structural efficiency.

With certain exceptions the maximum range of a jet aeroplane increases markedly with height, being commonly twice as great at 30,000ft as at sea level. The opposite is the case with the piston-propeller aircraft, which flies more efficiently for range at low altitudes. Turboprop aeroplanes lie somewhere between the two.

Maximum endurance is achieved when the minimum amount of fuel is used to keep the aeroplane flying. It follows that the speed for best endurance corresponds with the minimum drag speed of a turbojet aircraft, and the minimum power speed of a piston aircraft. The range and endurance speeds of a jet aeroplane are shown in generalized form in Fig. 4.9.

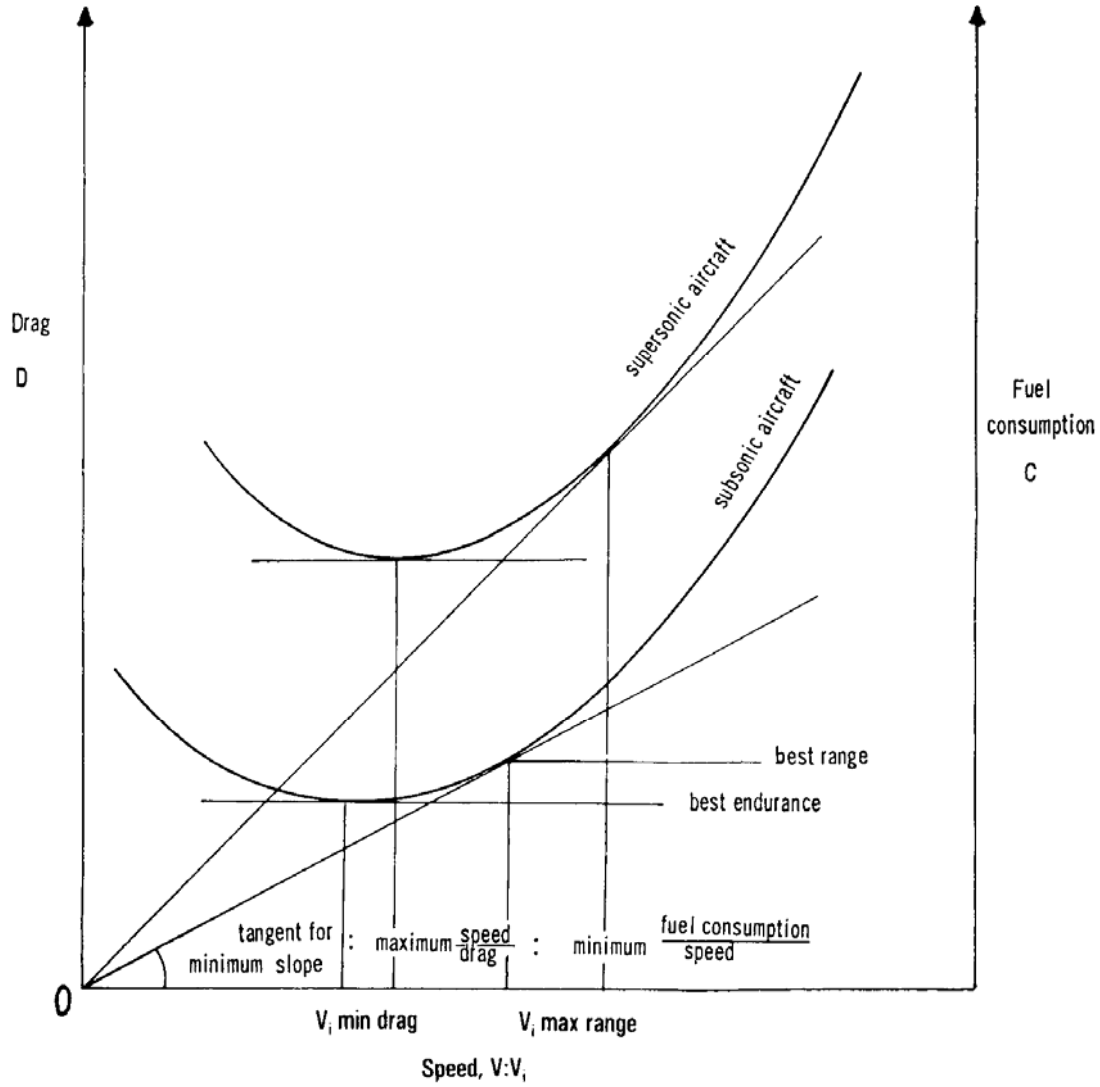

Fig. 4.9 Range and endurance of a turbojet aircraft in level subsonic flight.

Summarizing for both aspects of specialized performance: attention must be paid to design for the lowest drag; engine economy is of utmost importance; and the structure of the aircraft must be as light as possible.

4.3 The effect of 'stretching' requirements

The commonest ways of 'stretching' requirements are to increase the payload, or the fuel load, both of which increase the all-up weight. Increased payload involves stretched fuselages: it is significant that few transport aeroplanes designed in recent years have remained unmodified for long in their original form. Increased fuel loads involve either overload tanks — hung beneath wings and fuselage — or wings of larger area.

Increased weight with unchanged wing area increases the wing loading: which may be thought of as a pressure applied to the supporting air by the wing surfaces. There is a relationship between wing loading and dynamic pressure, $0.5\rho V^2$, or $0.7pM^2$ (as given in Eqns (1-5) and (1-8)) that must be maintained if the aeroplane is to continue flying at the most efficient angle of attack to the air. In the next chapter we shall examine the aerodynamic picture to see the way in which the aerodynamic forces vary with speed and attitude to the air. If the wing loading is increased, then it must be met with increased dynamic pressure, and this can only be done by a reduction of height, for to increase speed at the same height involves running the engines off-design and, hence, inefficiently.

The effect of increased wing loading is to shrink the boundaries of Fig. 2.1 towards the centre, by increasing the stalling speed, decreasing the ceiling and decreasing the maximum and cruising speeds. Increased stalling speeds result in higher landing speeds and greater kinetic energies to be absorbed by the wheels and brakes. For example, an aeroplane weighing 17 short tons (34,000 lb) touching down at 165k represents about 41,000,000 ft-lb of kinetic energy: enough to kick a 5-ton elephant 4,000ft straight up into the air. If the aircraft could be landed at 110k, then the reduced energy would be only 18,000,000 ft-lb: the saving being equal to the heat potential to melt 100 lb of steel.

If, on the other hand, it is possible to increase the wing area at some stage in the design, then the wing loading may be maintained or even reduced. Of course, the increased wetted area being moved through the

air may well result in a decreased overall lift/drag, but this is offset by reduced landing speeds when most of the fuel has gone. Unfortunately, stretching requirements tends to result in weight increasing faster than wing area, as initially indicated in Fig. 4.10, which shows the growth of the medium and long-range versions of the Aerospatiale/ BAe Concorde from November 1962 to May 1964. The initial wing loading increased from 60 lb/ft^2 to 79 lb/ft^2: a growth of more than 30%. It must be remembered, however, that the growth was brought about by the building-in of more advanced features and advantages.

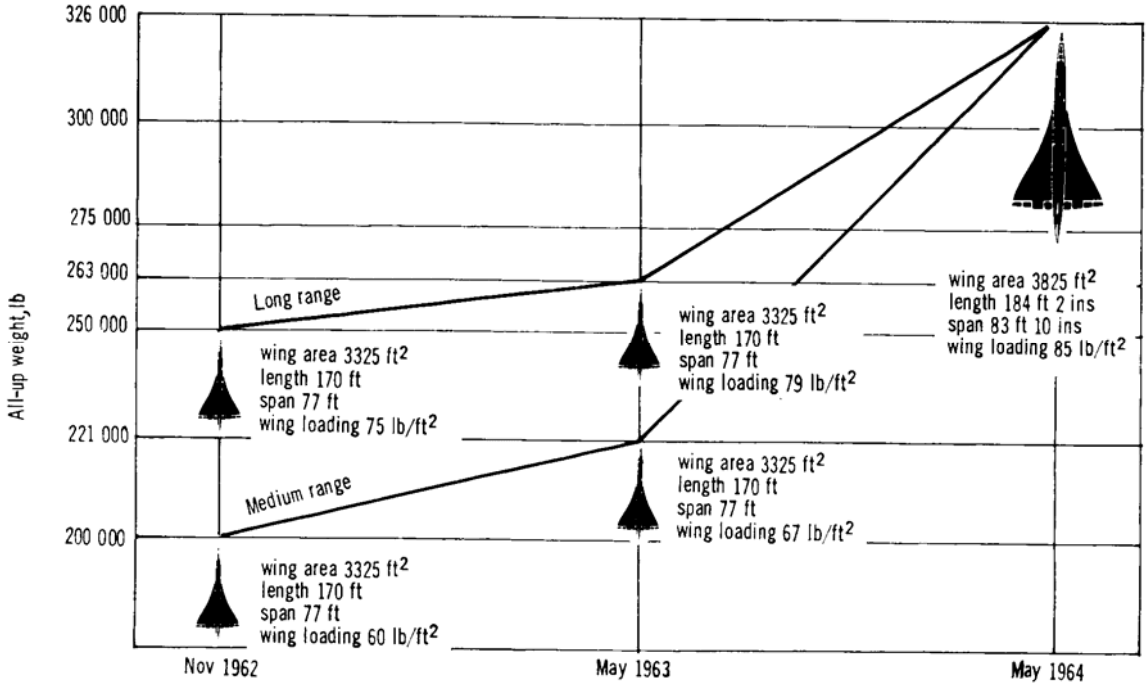

Fig. 4.10 Diagram showing the way the Anglo—French Aerospatiale/BAe Concorde was reported to have grown in weight and size since it was first announced as a firm project. The aeroplane grew 63% heavier and 14ft longer in a little more than 18 months. More than 25 years later it is still in operation.

4.3.1 Physically stretching the basic aeroplane

The disadvantages of overloading a basic aeroplane by modifying it to carry more fuel within its existing envelope, or by attempting to increase productivity (payload times block speed, Eqn (3-1a)), by shortening the seat pitch and leg space of passengers, can be severe. A favored alternative is to insert volume-increasing structural ‘plugs’, confined as far as possible but not exclusively within the existing frontal area. Where this cannot be done, then changes which increase the area and span of wings and tail surfaces, without decreasing their aspect ratios, can be just as beneficial, even though frontal area is somewhat increased.

The reason for maintaining aspect ratio as far as possible is that the lift-dependent or induced drag of a wing, D_L, is directly proportional to the span-loading: the total weight of aeroplane carried per unit length of wing span (W/b). The lower the weight (hence mass) borne per unit length of wingspan, then the slower the lift-generating downwash and waste of fuel spent on giving the air mass a downwards momentum. The other way of looking at it is that the induced drag coefficient C_{DL} and therefore D_L are inversely proportional to the aspect ratio, A (see Eqns 6-5) and then (5-11)). The higher is A, the lower is D_L.

An example is that of the changes made by the European Consortium, Airbus Industrie, to its A340-300 airliner, to counter the transatlantic challenge posed by the US Boeing 777-300. Figure 4.11 shows that the basic European aeroplane is enlarged and re-winged to produce two new variants. The first, the A340-500, is stretched by means of structural ‘plugs’ or inserts, turning it into an ultra long-haul version of the basic A340-300 (designed for 295 passengers). The manufacturer claims that the plugs increase design cruising speed, in spite of modest increases in frontal area and wetted-area of skin. The modifications improve speed flexibility, making the specific air range (Eqn 4-9)) less sensitive when the aircraft is flown off-design. The much increased gross weight is said to accommodate enough fuel to extend the range from Europe to as far as the west coast of the USA. The second, A340-600 variant, has cabin capacity increased by means of even larger plugs to carry 25% more passengers.

(picture)
Plate 4.2 (a) and (b) The European Airbus Industrie Consortium response to the Trans-Atlantic challenge from Boeing (Plate 4-3(a) and (b)). Note the winglets at the tips and the flap-track fairings at the wing trailing edges. Both sets of devices are shaped to generate vortices which weaken, by diffusion, the powerful trailing vortex system shed by the wings, which is the origin of lift-induced (or lift-dependent) drag. The lift/drag ratio is

improved and with it range (see also Appendix C).

(picture)
Plate 4-3 (a) and (b) showing the Boeing challenge to European competition in the form of the stretched 747-600X (now understood to have been abandoned); and the first of the 777-200 and 777-300 family. A major problem with all large transport aircraft is fast and controlled passenger evacuation in the event of an emergency (see also Appendix C).

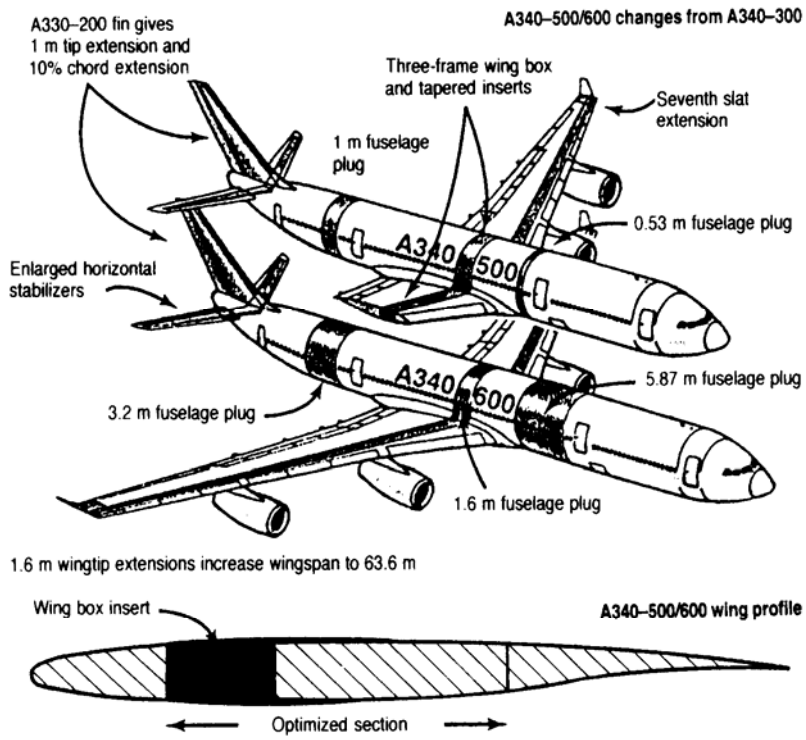

Specifications	A340-300	A340-500	A340-600	B777-300
Max. take-off weight (kg)	275000	356000	356000	299640
Passengers (three classes)	295	316	372	375
Range (km)	13505	15355	13690	9713

Source: Airbus Industrie

Fig. 4.11 Airbus A340/Boeing 777-300 comparison. (Courtesy of Flight International, 9—15 October 1996.)

The same structural philosophy applies to wings and tail surfaces. A tapered wing-box, inserted to widen the chord without increasing wing thickness, increases wing volume while making the section aerodynamically finer. Both area and fuel volume are improved within the ‘wet-wing’ (a structure which acts as a sealed aerofoil-shaped fuel tank). The longer span and widened chord counter an increase in wing loading, while maintaining aspect ratio which, as we have just seen, is proportional to span squared/area. The ratio of lift/drag is the powerful aerodynamic contribution to range-flying ability (see Eqns (4-11), and (4-11a and d) in Section 6.4).

Enlarging a fuselage and a wing increases their weights, and thus the total mass and moments of inertia, these in turn generally force increases in the size of the tail control and stabilizing surfaces. The larger the aircraft the more powerful the flywheel effect about the axes through its centre of gravity. Increased inertia makes the aircraft more sluggish in response to control. When it is rotating about its **CG**, then like a heavier flywheel the motion takes more stopping, so that greater control authority and larger tailplane and fin areas are needed to damp and oppose the motion.

The act of stretching an aircraft inevitably increases the weight. There is often increased risk of a tail-strike on take-off and landing. Undercarriage units must often be strengthened if they and their supporting structures have insufficient reserve strength. There may also be a need to increase the number of wheels, as in the case of the A340, which has them mounted on a centre-gear, beneath the centre-section. If stretching has markedly increased the gross weight, then re-engining may also be necessary.

Increased weight without alteration of structural strength is equivalent to flying at increased normal acceleration, in that smaller margins are left within the maneuver envelope. Maneuvering has to be carried out more gently and smaller accelerations must be applied if strain and failure are to be avoided. Most aircraft are now fitted with cockpit accelerometers that measure the normal acceleration in flight. Most heavy aeroplanes are also fitted with V—g recorders which maintain a continuous count of acceleration levels exceeded on every flight.

4.4 Tailless, tandem (conventional) and three-surface configurations

There are basically three significant wing and stabilizer arrangements: tailless, tandem and three-surface.

4.4.1 Tailless

The planform with the least wetted area for the payload volume available is the tailless (Figs 6.2 and 8.14). It has the potential advantage of the least drag of all, which promises highest performance for a given power output. Unfortunately it does not work like that in practice. We shall see in due course the ways in which aircraft are shaped to provide stability and control authority. While a tailless aeroplane can be made inherently stable, it has a less flexible **CG** range when being loaded. It is therefore harder to balance, suffering from tighter loading restrictions. When designed to be agile and handy, manually controlled tailless aircraft are among the least stable. As a consequence, without artificial stability, or special shaping to make them inherently stable (which diminishes control authority), they tend to be far more ‘twitchy’ in pitch than those with separate stabilizers.

(picture)
Plate 4-4 Grumman Northrop B-2A strategic, stealthy operation, bomber. The unusual shape is no scatter the returns of incoming electromagnetic radiation, and to shield its own emissions (see also Appendix E).

The Wright Flyer, which flew on 17 December 1903, was in fact a tailless biplane. The biplane foreplane surfaces were there exclusively for control in pitch, not for stability. It had to be flown hands-on all of the time. Eventually the Wrights fitted a tail.

Having said that, tailless aeroplanes, especially deltas, have military uses and have appeared in service as bombers and fighters over many decades. In the world of civil operations some 14 supersonic Aerospatiale/BAc Concords have served since roll-out in 1971, mainly on transatlantic routes. Military low-observable (stealth) requirements have led, since 1978, to the 2—3 seat Northrop Grumman B-2A strategic penetration bomber, which has quadruple-redundant digital fly-by-wire flight control systems and stability augmentation.

4.4.2 Tandem (tailplane or canard foreplane)

By tandem configuration we mean a main wing system with tail-mounted stabilizer — a tailplane — following behind. However, a tandem arrangement also includes one with a canard foreplane. Who first coined the name 'canard’, no-one is quite sure, although its origin can be guessed with some certainty. Such aircraft tend to have much longer fuselages ahead of the wing, and the system resembles most of all the duck, for which the French word is canard.

(picture)
Plate 4-5 Beech Starship, designed by Burt Rutan. An advanced canard business-executive aeroplane. Note the vortex-generators along the foreplane crests (see Fig. 6.17) and the boundary-layer fences at the trailing edge aileron roots. The aeroplane also has winglets and four vortilons below the leading edges of both main planes, to generate favorable vortices. All pusher propellers are noisier than tractors. The Starship has a note of a distinctive pitch (see also Appendix A).

Canard aircraft appeared frequently in the early days of flight. The arrangement of wing and foreplane pitch-control/stabilizer, being ahead of the centre of gravity, lifted upwards in the same sense as the wing(s). However, surfaces mounted ahead of the **CG** are destabilizing. Although a canard foreplane elevator helped to get an underpowered aeroplane off the ground better than did a rear plane elevator on take-off, in flight the aircraft was much more tiring to control, because the pilot had to be adjusting it hands-on, all of the time.

4.4.3 Three-surface (foreplane, wing(s) and tailplane)

The arrangement of fore, main plane and tailplane surfaces looks uneconomical at first sight. The additional surface area, together with extra junctions and interference, threatens increased skin friction and other parasitic drag (Fig. 4.12).

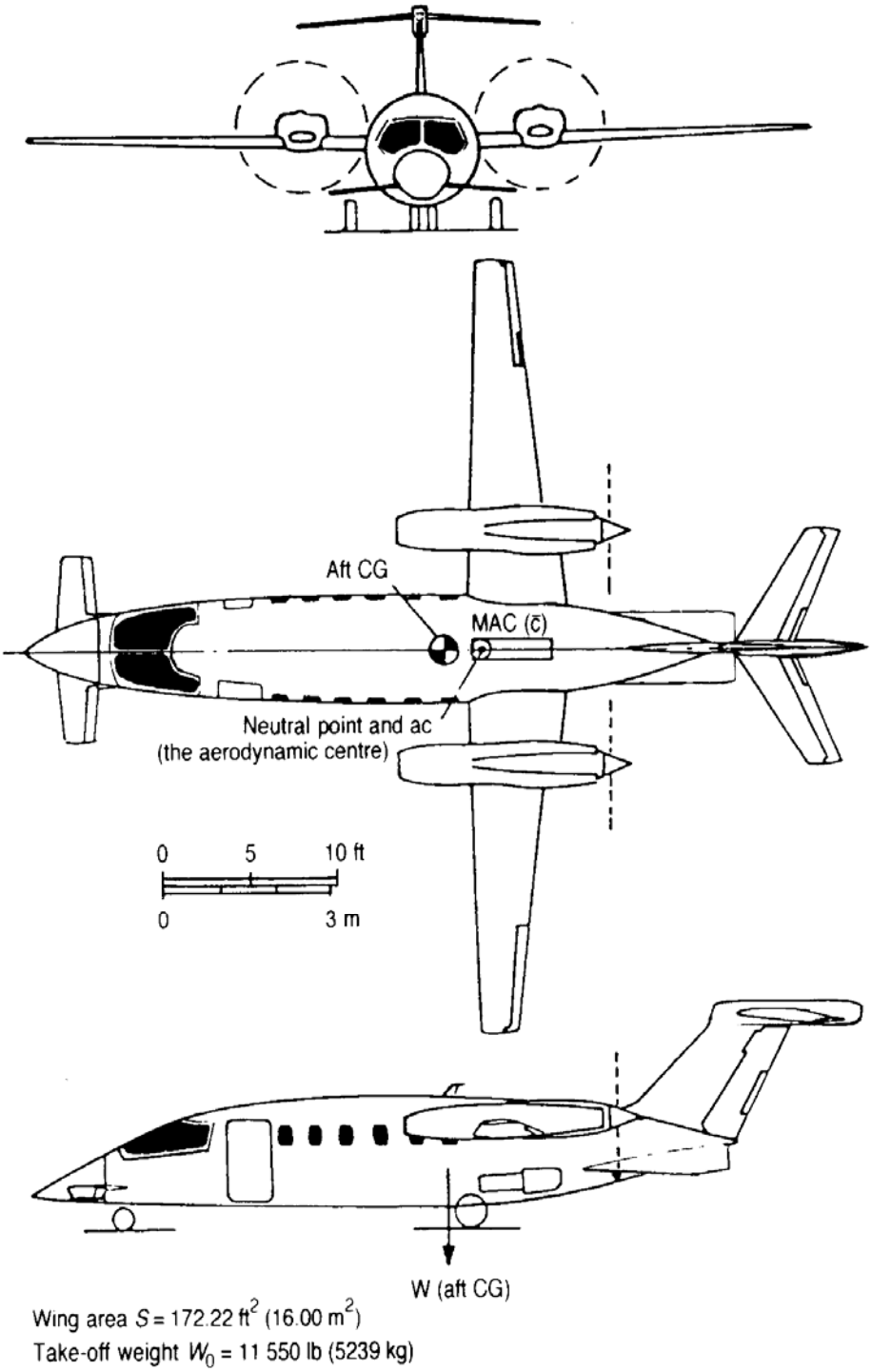

Fig. 4.12 A three-surface aeroplane, the Piaggio P180 Avanti, single-pilot operation with up to nine passengers. Note ventral strakes on rear fuselage and tailplane fairing: ‘fixes’ which suggest deficient basic longitudinal and directional stability, found during flight tests.

However, three-surfaces also promise reductions in trim drag in the cruise, provided that the optimum **CG** position can be maintained; this may be achieved conveniently by transfer of fuel between tanks fore and aft.

E. R. Kendal of the Gates Learjet Corporation in a paper presented in 1984 pointed out the advantages of three-surfaces. They are as follows:

(1) Fore and main planes together are the dominant source of lift, as both act in the same sense. They provide the required wide **CG** range, greater flexibility in loading and shortened take-off and landing distances (STOL). The rear plane/tailplane is left free for control in pitch and adjusting longitudinal trim.

(2) Conventional two-surface aeroplanes cannot have minimum induced drag at all **CG** positions.

(3) The pure canard aeroplane cannot attain the minimum induced drag trimmed condition and also be inherently stable.

(4) Three-surface aeroplanes can have minimum induced drag at all positions of the **CG**, and remain inherently stable.

(5) The three-surface aeroplane can have ‘better cruise-efficiency in a stable trimmed condition over a practical range of **CG** locations than the conventional aft-design, which in turn has much better cruise

efficiency than the two-surface canard configuration'.

However:

(6) Tests are needed to determine the drag benefits of three-surface aeroplanes.

Part 3 AERODYNAMIC SHAPE

Chapter 5 The 'Classical' Generation of Aerodynamic Forces

Although it may often seem that the picture of Nature at work is clouded by attempts to explain phenomena in the shorthand of mathematics or the concepts of classical science, more often than not the abstraction is the nearest approach to the truth that can be made at the time. One such example is the common tendency to imagine an aircraft to lie somehow at rest, with the air flowing past it and behaving in a rationalized way. This picture is used in almost every textbook and is accepted so naturally, that even flying-men are heard to say that: 'the airflow is brought to rest at...' (some point or other on the airframe) and going on to talk then of an 'undisturbed flow' that passes, river-like, from infinity upstream to infinity downstream. The picture is fair enough when one considers what happens in wind-tunnel or water-channel experiments, where a gas or a liquid is arranged to flow past a static model. It tells us very little about the real world of seemingly alive aeroplanes, or of how to bridge the gulf between the often superficially incompatible worlds of theory and practice. Let us consider then what happens when an aeroplane moves through air that is relatively at rest.

5.1 The nature of aerodynamic forces

Imagine an aeroplane passing through a mass of air, drawn as a cylinder in Fig. 5.1.

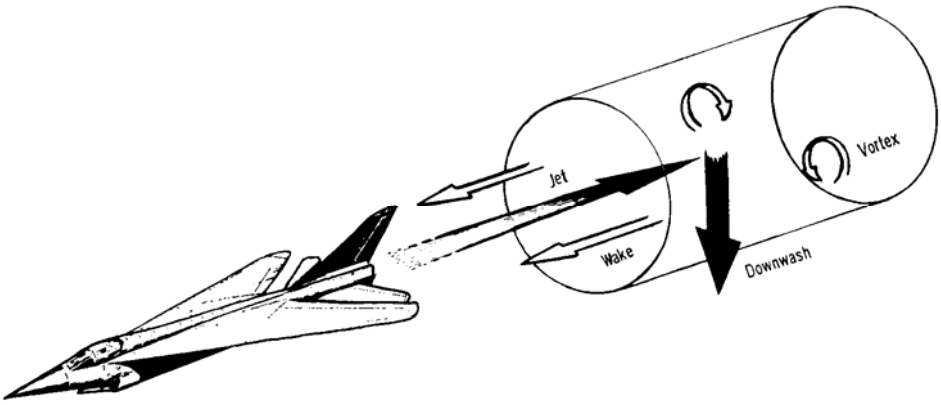

Fig. 5.1 The effect of an aeroplane upon a mass of air through which it has just passed.

The particles of air within the mass are deflected in all directions, but if the aeroplane is in straight and level flight the motions of the particles will be symmetrical either side of a vertical plane along the centre line. Broadly speaking the particles would be seen to move in two kinds of motion: translational, in which movement is a pure displacement without spin; and rotational, in which the particle spins about one or more of its axes.

Both displacement and rotation of the mass of a particle require work to be done, energy to be expended, and the energy is taken from the fuel of the aeroplane via the combination of engines and airframe. Every particle affected by the aeroplane is given an acceleration in unit time (it does not matter here whether the acceleration is linear or angular) and the reaction of the particles to acceleration is felt over the surfaces of the aeroplane as a field of varying pressures.

In fact there are two sources of resistance to motion through the air. The first arises from pressure alone, due to displacement. The second is due to friction between the separate particles of air, and the air and the airframe. One cannot avoid generating both pressure and friction when moving through the air. The aim of aerodynamic research is to discover shapes and combinations of shapes which enable the aircraft designer to use the inevitable aerodynamic forces to the best advantage.

If we could see the air in the cylinder after the aeroplane had passed we would see that a new downward motion had been imparted, in effect a downwash, which is the origin of the lift. If the aeroplane flies quickly a large mass is affected in unit time, but the downwash velocity is relatively small. When flying slowly a smaller mass is affected but the downwash velocity is larger. Hovering aircraft produce strong downwashes. The lift is the reaction resulting from imparting a downwards momentum to the air.

The pressure field varies around the aeroplane, but in general the pressure is higher around the under surfaces than it is around the upper surfaces of the airframe. The net normal reaction of the pressure field is

therefore upwards, as lift. Allied with the downwash and the associated pressure field is the trailing-vortex system, in which a large-scale rotation of the air takes place about two axes lying in the wake of each wing tip. The vortices are part of the circulation of the wings and are caused by the air flowing outwards from the high-pressure under surfaces, upwards around the tips and inwards again over the low-pressure upper surfaces. Within the boundary of each tip the air sweeps downwards and this gives rise to the predominant downwash pattern. There is a circulation around every lifting surface — no matter what the direction of the lift vector. If the lift vector is downwards over a part of the span, then the local circulation is in opposition to the main circulatory system. Circulation theory, pioneered most notably by Lanchester (1878—1946) and given practical mathematical form by Prandtl (1875—1953), is the basis of modern wing theory. We will shortly consider the physical explanation of circulation in greater detail.

Now consider the motions of the air in the direction of flight. The aeroplane derives propulsive thrust from a slipstream of air driven rearwards by a propeller (propwash) or a jet engine. The momentum added to the air is a measure of the thrust reaction. Some of the air is gathered by the aeroplane and swept along with it for some distance before being shed as a wake. The wake is therefore given a change of momentum in a direction opposite to the propulsive slipstream. The change of momentum given to the wake is reacted as drag, the force opposing motion through the air. The total drag is made up of a number of components and may vary from as little as one-sixtieth of the lift of a very high performance sailplane, to as much as one-fifth of the lift of a supersonic transport. In the latter case the engines of a machine weighing 300,000lb would have to produce a combined thrust of 60,000lb (30tons) at Mach 3 and 70,000 ft.

5.1.1 Pressure and streamlines

When air is ‘at rest’ — in effect the particles are moving at random — the static pressure on a surface is the ambient pressure at that altitude. The static pressure is the mean force/unit area due to the bombardment of the surface by particles moving at the root mean square of the molecular velocity. That velocity, which corresponds with the velocity of sound at that altitude, may be thought of as the typical limiting velocity at which a pressure pulse may be transmitted through the air. As long as the ambient temperature of the air is unchanged by the passage of a body, the speed of sound remains constant.

The static pressure varies with the head of air above the level at which it is measured. The head of air possesses energy in that it has potential energy due to position, and the static pressure is capable of doing work. If the air is in motion at the pressure level the particles also possess kinetic energy, measured in terms of the dynamic pressure $0.5\rho V^2$. As soon as the air is in motion in a particular direction the motion is no longer random but directed.

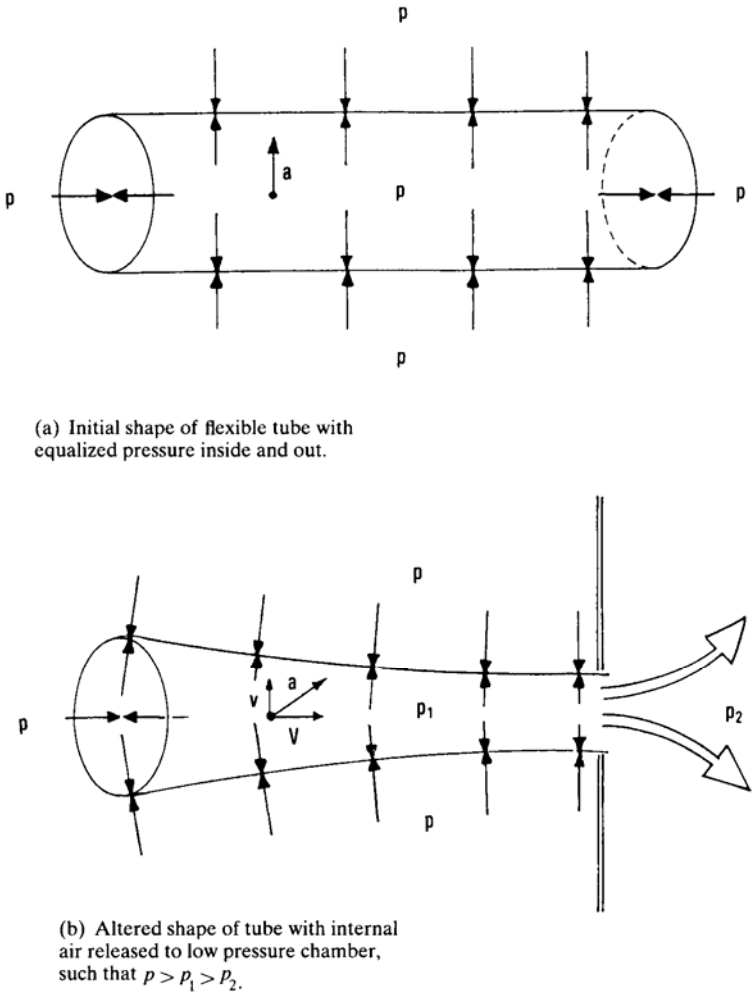

Fig. 5.2 (a) and (b) The physical view of the effect upon the static pressure within an elastic tube, caused by particles of air colliding with the walls, when moving about at random with root mean square velocity, *a* (their local speed of sound, which they are unable to exceed unforced). When set in directed motion at velocity *V*, their components of motion at right angles to the tube wall are reduced, and also the static pressure caused by their impacts.

Now consider a flexible tube immersed in air with equalized pressures both inside and out as shown in Fig. 5.2(a). If one end of the tube is separated from a low-pressure chamber by a diaphragm which is then punctured, the air within the tube will flow with directed motion towards the low-pressure chamber. If the pressure difference is sufficiently small then the density and temperature of the confined air will be unaffected and the particles will move with a velocity less than the velocity of sound a. One might then draw a vector diagram for a particle in which the vector resultant is equivalent to the velocity of sound (Fig. 5.2(b)). Clearly, the component of velocity, *v*, normal to the wall of the tube is less than when the motion is random. Therefore the static (normal) pressure is reduced and the walls collapse inwards. The higher the directed velocity V the lower the pressure p_1.

The phenomenon discovered by Leonard Euler (1707—1783) is expressed in a theorem of Daniel Bernoulli (1700—1782) which states that in the flow of an incompressible fluid — if we disregard gravity (i.e. any change in potential energy) and friction — the sum of the pressure head and velocity head is a constant:

$$p + 0.5\rho V^2 = \text{a constant} \qquad (5\text{-}1)$$

The argument can be extended by replacing the flexible tube in Fig. 5.2 by a stream tube bounded by streamlines in a directed mass of air — a streamline being an imaginary line along which motion is wholly tangential. When a body is immersed in such a mass of air, particles are displaced at different velocities by different parts of the body surfaces. Where local velocities are increased, the pressure is decreased and the streamlines move together. Where local velocities are decreased, the pressure increases and the streamlines move apart.

In reality air is compressible, but another relationship helps us to visualize the behavior of a stream tube when the density and static pressure of the air are changing. The relationship depends upon the conservative nature of the air, i.e., mass is neither lost nor gained, so that the mass contained within a stream tube and moving with velocity V is

$$\rho A V = \text{a constant} \qquad (5\text{-}2)$$

where A is the cross-sectional area of the tube. If the density remains unchanged then a decrease in A is accompanied by an increase in V and vice versa. If the velocity increases greatly and the pressure drop is large enough to decrease the density of the air, then the change will be accompanied by a smaller decrease in the cross-sectional area of the stream tube.

The foregoing explanation presupposes that the mass of air is in directed motion, but, as we said earlier, this has nothing to do with the reality of air being more or less at rest with an aeroplane passing through it. Under these conditions the surfaces of the aeroplane gather up some of the air to a certain extent, and it follows that those particles swept along by the aeroplane impose a reaction against the surfaces of the airframe which is felt as increased pressure.

Eventually the particles free themselves to return to their undisturbed condition and the pressure decreases again. When the particles are swept along they have the lowest velocity relative to the aeroplane and exert the highest pressure. When they are in the process of returning to their undisturbed condition their relative velocity increases, and the pressure begins to drop. The pressure distribution over the surface of the body is therefore a function of the relative velocity, and it is that velocity which is used in aerodynamic calculations.

In this way two quite different situations may be treated in the same way mathematically, but although a fixed body in a wind-tunnel can have the same aerodynamic laws applied to it as an identical body in motion through air, we must not fall into the lazy trap of confusing the one with the reality of the other.

These relationships are the root of a most important design technique: that if we wish to obtain a particular sort of pressure distribution around a part of the airframe at a given design point, then it is possible to calculate the necessary profile to induce it. Two such examples of Computational Fluid Dynamics (CFD) modeling, given by A. Jimenez-Garzon to an IMechE Seminar in 1996, are shown in Fig. 5.2(c) and (d).

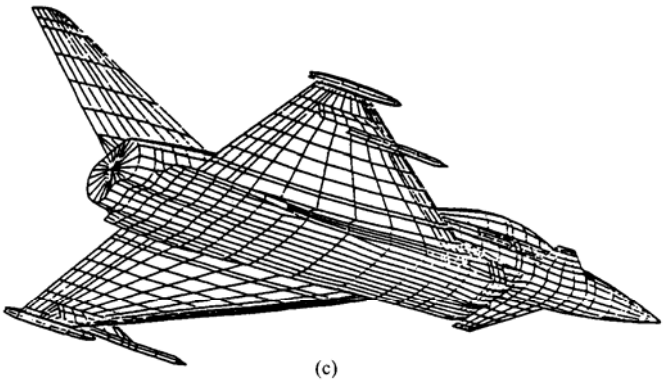

(c)

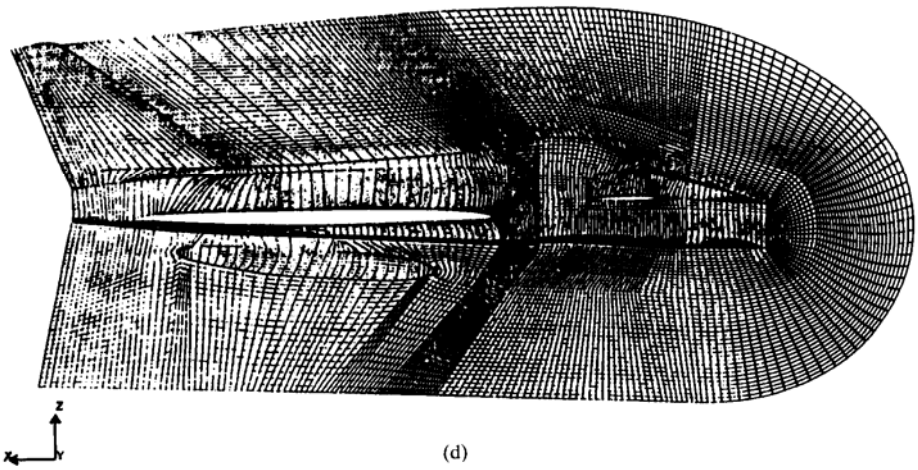

(d)

Fig. 5.2 (c) and (d) The computer software view, showing computational Fluid Dynamic Methods (CFD) for the EF 2000 Eurofighter. The singularity method (panels) in (c) is used to determine subsonic and supersonic linear flow conditions. The Euler method in (d) is to reproduce non-linear flow conditions in the transonic regime.

5.2 Subsonic flight

In subsonic flight the aeroplane can be considered to be made up of discrete parts each with its own independent function. Aerodynamic design seeks to achieve the maximum efficiency of each part as a separate entity, while minimizing the interference between them.

Lifting surfaces, generically called aerofoils, include all wing and stabilizer surfaces. Aerofoil sections are specially shaped for generating high lift/drag, typical values in subsonic flight being from 17 to 20 for a clean jet aeroplane, but less for those with piston-propellers; and when well worn.

5.2.1 Aerofoil section geometry

A symmetrical aerofoil profile is shown in Fig. 5.3(a) and below it the same section modified, by the introduction of camber. The aerofoil definitions are based upon the American NASA (National Aeronautical and Space Administration) series of sections. It should be noted that the thickness distribution along the chord of the section, the position and amount of camber and the radius of the leading edge circle determine the curvature and slope of the upper and lower surfaces at any point.

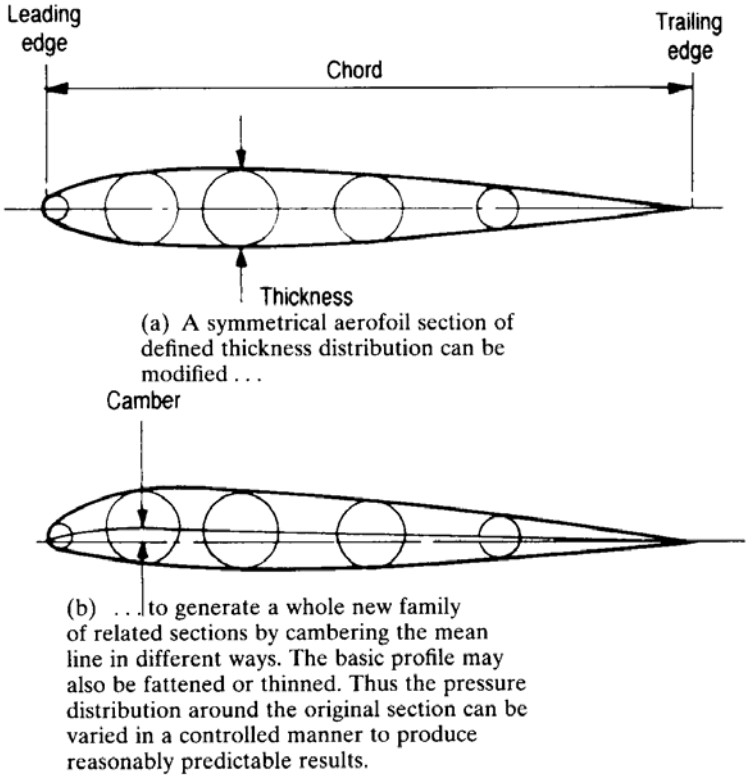

Fig. 5.3 Basic aerofoil geometry.

The pressure over an aerofoil surface is made up of three components, the last two of which have been combined here. The resultant pressure is approximated to the algebraic sum of:

(a) The pressure arising from the displacement of the air around the basic symmetrical section at zero angle of attack — clearly a function of the thickness distribution along the chord.

(b) The pressure distribution over a thin plate having the same camber distribution and generating the same lift as the aerofoil in question.

Many factors are taken into account when choosing the aerofoil sections for wings and tails, simply because no one section possesses all of the needed qualities. A fully cantilever monoplane wing requires a thicker section than an externally braced wing, such as a biplane might use. The final choice depends upon the relative importance of the aerodynamic, structural and stowage properties of wings.

To aid the designer in his choice various useful families of related sections have been designed in different countries at different times. The best known is the NASA series of America. There is no precise equivalent in the UK, although a historical series of RAF (Royal Aircraft Factory, later the Royal Aircraft Establishment) sections was used during and after World War I.

Let us now consider the way in which section geometry determines aerodynamic properties.

5.2.2 Circulation and vortices

Imagine a mass of air particles being met by an aerofoil section moving with velocity V (the argument is much the same if the air is moving instead towards a stationary aerofoil, as in a wind-tunnel). Two particles, A and B, are deflected above and below the section which, because of the camber and angle of attack, presents upper and lower surfaces of different lengths and curvatures to the air it meets (Fig. 5.4(a)).

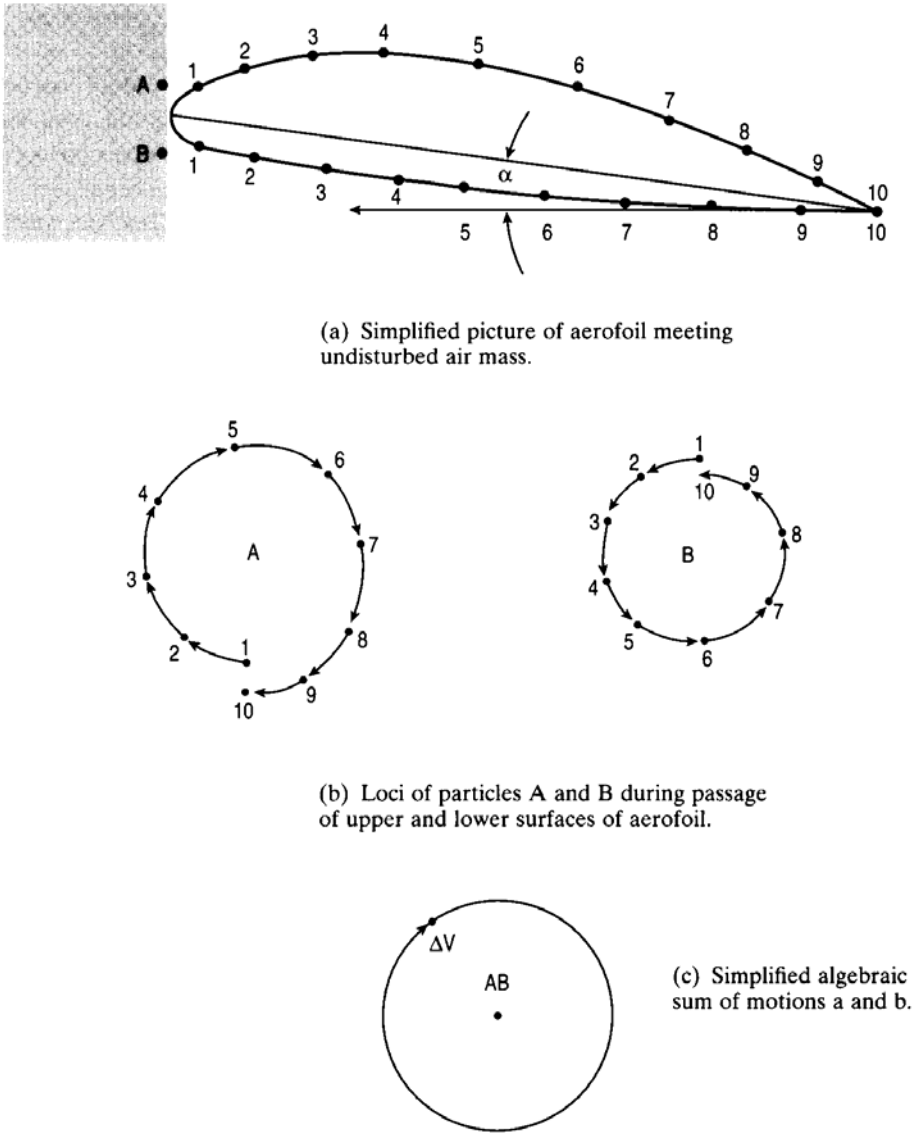

Fig. 5.4 The generation of circulation by an aerofoil in its passage through a mass of air.

The major effect of the aerofoil surfaces is to give both A and B a forward impulse, at the same time separating them: A upwards, B downwards. In doing so the particles are crowded into the mass of air ahead of the leading edge and the local pressure is increased. Each particle is able to slip, with friction, over their respective surfaces. After a small interval of time, when each is adjacent to station 1 (upper and lower), the impulse given by the surfaces has decreased, because of the reduced slope of each, although the impulse given to A is larger than to B, because the slope of the upper surface is steeper than the lower.

As the aerofoil passes, the slope of the surfaces decreases, and the high pressure of the particles crowded ahead of the aerofoil is able to thrust A and B rearwards, over the crest at the point of maximum thickness of each surface. The surfaces are shaped like the tube with curving walls in Fig. 5.2(b), and as the particles move rearwards the static pressure falls. Beyond the crest, however, the air displaced by the retreating aerofoil comes crowding back, forwards, inwards, to fill the rarefied regions left by its passage. A and B are therefore retarded in their rearward motion and squeezed (as it were) by increasing pressure forwards and inwards again, until — agitated and displaced downwards (relative to their original positions) — they are left in the wake behind the retreating section.

If one could draw the locus of each particle at successive intervals, corresponding with stations 1—10 across each surface, it would be seen that A and B had been forced to circulate around paths looking rather like those in Fig. 5.4(b). The circuits of each would be in opposition, but the algebraic sum of the two motions would be dominated by the more vigorous motion of A (because of A's greater displacement in the time), leaving a resultant clockwise motion with average velocity of rotation AVAB, as shown in Fig. 5.4(c). Further, both have been pushed downwards, as downwash.

An aerofoil surface can be replaced, theoretically, by a chordwise sheet of bound vortices stretching from tip to tip — for the circulation shown in Fig. 5.4(c) could well apply at any average station across the chord. In fact ΔV_{AB} varies from station to station as the particles are initially accelerated, and then decelerated again behind the crests of the upper and lower surfaces. We are not concerned with the mathematics of such a vortex system. Suffice it to say that by postulating such a system, and then adding vectorially the relative

velocities around each vortex to the undisturbed relative airflow, V, we may obtain a reasonable approximation to the relative airflow around the aerofoil, this is shown in Fig. 5.5.

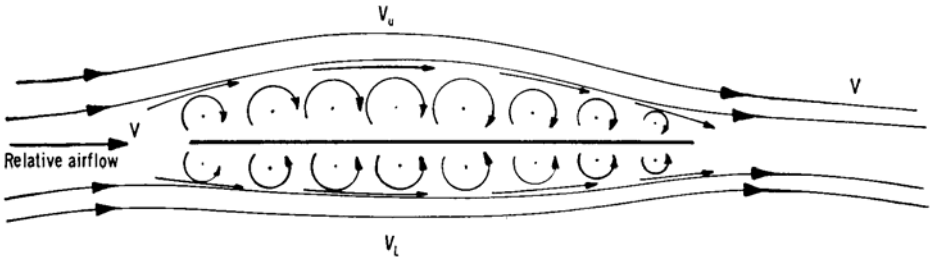

(a) Theoretical replacement of upper and lower aerofoil surfaces by two sheets of vortex filaments, upon which is superimposed the undisturbed relative airflow, giving a resultant flow as shown in (b).

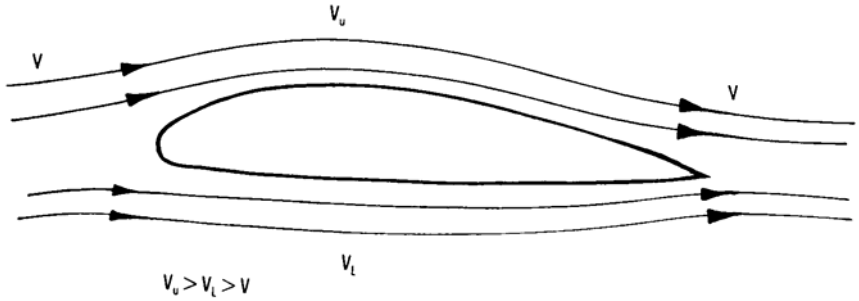

(b) Idealized relative airflow around aerofoil section showing similarity to (a).

Fig. 5.5 The relative airflow pattern around an aerofoil due to circulation around an induced vortex system.

The vector sum across the chord of an aerofoil of biconvex section, such as we have used for illustration, shows an increase in relative velocity of the airstream over the crests of the surfaces. However, the relative velocity is higher over the upper surface than over the lower. If we now apply Eqn (5-1), using the relative velocity at any point, we may calculate the pressure distribution across the chord. The spanwise pressure distribution is as shown in Fig. 5.6(a). Clearly, if the pressure is lower across the upper surface than across the lower surface, there is a net lift across the chord of every spanwise station. The spanwise lift distribution varies with different planforms and body arrangements, and this will be discussed shortly.

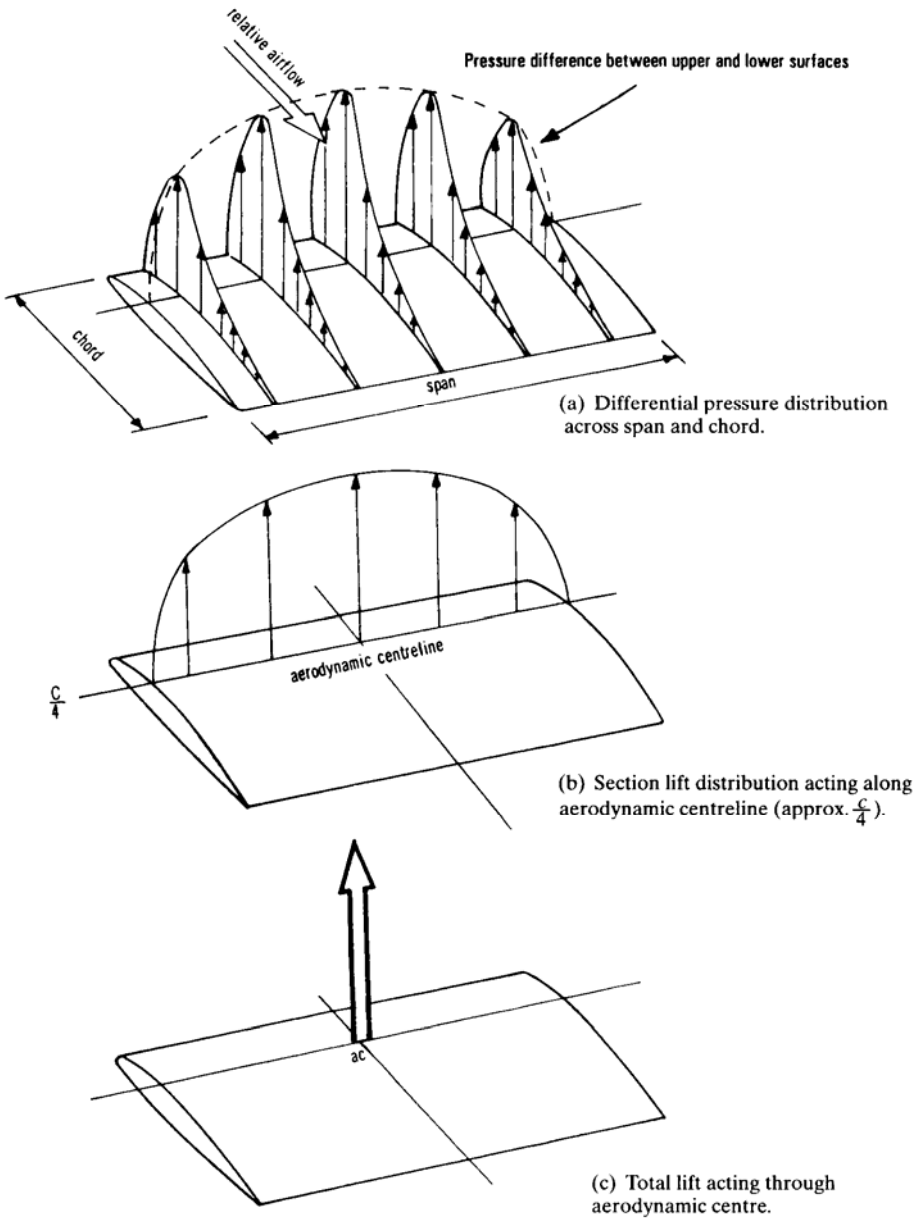

Fig. 5.6 Aerodynamic load distribution on a subsonic rectangular aerofoil.

In theory a vortex can neither begin nor end in a fluid, it must form either a closed loop or end at a surface. The sheets of bound vortices do not end at the tips of an aerofoil but are shed across the span, to wrap themselves into the large trailing vortices already mentioned, lying in the wake of each tip. In fact the vortices eventually die away due to friction and turbulence behind the aircraft, forming a horseshoe vortex system when taken as a whole.

5.2.3 Pressure, loading and pitching moment

The differential pressure and aerodynamic load distributions in Fig. 5.6 show the origin of lift but not drag. The static pressure acts at right angles to every point on the ‘wetted’ surface area of an aeroplane. It is convenient to resolve the force due to pressure acting over unit area into components that are normal and tangential to the flight path, as shown in Fig. 5.7(a).

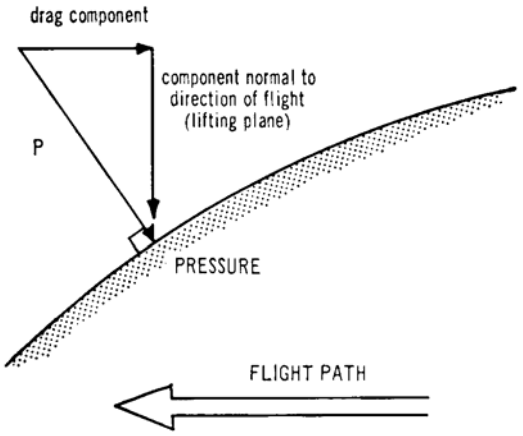

(a) Static pressure: resolution into lift and drag components.

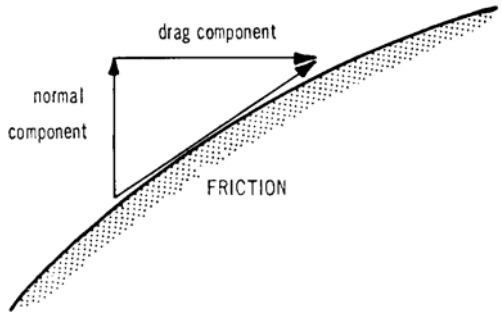

(b) Skin friction drag component.

Fig. 5.7 The aerodynamic components of static pressure and skin friction.

The frictional forces must also be taken into account, as shown in (b). The sum of the normal pressure components is the lift generated aerodynamically. The pressure drag components, when summed over the whole airframe, give the total pressure drag, D_{press}; while the sum of the frictional components gives the skin friction drag, D_{fric}. Hence, the total drag of an aeroplane is given by

$$D = D_{press} + D_{fric} \qquad (5\text{-}3)$$

The estimation of drag is a complex problem. The pressure components in particular are affected by a large number of factors that cannot be controlled by the designer as finely as he would wish.

Circulation and downwash

We have seen that circulation is the motion around curved paths of the particles of air affected by the passage of an aerofoil surface. In fact circulation is generated by any body moving through the air at subsonic speeds: the art is to make circulation work by generating lift. Ways of increasing the local circulation of an aerofoil involve local increases of camber. Wing flaps, and all flap-like control surfaces are camber-changing devices and as such are employed to alter local lift distributions. Similarly, one often sees cambered leading-edge extensions over parts of the span of some wings and these are employed to smooth out local airflows and maintain efficient circulations.

Now, the downwash momentum imparted to the air is also a measure of the lift of an aerofoil, and it follows that there is a direct connection between the strength of circulation (i.e. the product of the air velocity around a curved path and the length of the path) and the downwash velocity. To generate a given lift at a given airspeed an aerofoil of long span has to impart a smaller downwash to the air it meets than an aerofoil of shorter span. The reason for this is that the mass of air affected in unit time is proportional to the product of the distance flown and the span: double the span and twice as much air is affected. As momentum is the product of mass and velocity, doubling the span halves the required downwash velocity to produce a constant rate of change of momentum: the force known as lift. It follows, therefore, that a long span aerofoil generates less circulation per unit span than a shorter aerofoil generating the same lift. In fact we may summarize by saying:

(a) Downwash velocity varies directly with strength of circulation.
(b) Strength of circulation varies inversely with aerofoil span.

By imparting a circulation to the air an aerofoil experiences an equal and opposite reaction from the air. The reaction, in effect a torque, is called the pitching moment, which is denoted M and is nose down when the lift acts in the normal sense. The greater or lesser the lift, the greater or lesser the pitching moment.

The pressure and frictional forces acting on a lifting aerofoil section produce a resultant force which may be resolved into lift and drag components. Although the force and moment relationship depends upon the angle of attack of the aerofoil surface, it also depends upon the size of the surface, the airspeed and altitude. It is convenient, therefore, to state the lift, drag and moment characteristics of a section in terms of dimensionless coefficients that are independent of size and of ambient conditions. Actual forces and moments can then be calculated for surfaces of different sizes and for different flight conditions by applying the appropriate factors.

Dimensionless force and moment coefficients

If the average differential pressure across a strip section of an aerofoil Δy wide is $\bar{p}$ and the area of the strip of chord, *c*, is ($c.\Delta y$) then the lift of the section is

$$l = \bar{p}(c\Delta y) \qquad (5\text{-}4)$$

To eliminate the ambient factors ρ and V we may transpose Eqn (5-4) for $\bar{p}$ and divide by the dynamic pressure, obtained from Eqn (1-5) which is expressed in terms of

$$q = 0.5\rho V^2$$

The ratio of $\bar{p}/q$ is the lift coefficient of the section. c_l, where

$$c_l = \frac{\bar{p}}{q} = \frac{l}{q(c\Delta y)} \qquad (5\text{-}5)$$

The section drag and moment coefficients are derived in the same way, such that:

$$c_d = \frac{d}{q(c\Delta y)} \qquad (5\text{-}6)$$

and, introducing the chord *c* a second time, to make the moment dimensionless:

$$c_m = \frac{m}{qc^2\Delta y} \qquad (5\text{-}7)$$

If the total wing area of the aeroplane is denoted S, then the total lift, drag and pitching moments are given by

$$L = C_L 0.5\rho V^2 S \qquad (5\text{-}8)$$

$$D = C_D 0.5\rho V^2 S \qquad (5\text{-}8a)$$

$$M = C_M 0.5\rho V^2 Sc \qquad (5\text{-}8b)$$

Aerodynamic centre, ac

The pitching moment of an aerofoil varies with lift and, if an aeroplane is to be stable, i.e. if it is to return automatically to a required attitude after a transient disturbance, stabilizing surfaces must be used that are not uneconomically large and heavy. Fortunately there is a point between the leading and trailing edge of an aerofoil about which the pitching moment coefficient is constant with attitude (angle of attack). This point is called the aerodynamic centre of the aerofoil. The aerodynamic centre, or ac, lies roughly one-quarter of the way back from the leading edge, near the 025c, or 1/4c, point. The aerodynamic centre is important, because the centre of gravity is arranged to lie near it. Lift, drag and pitching moment are usually related to the aerodynamic centre, as in Fig. 5.8.

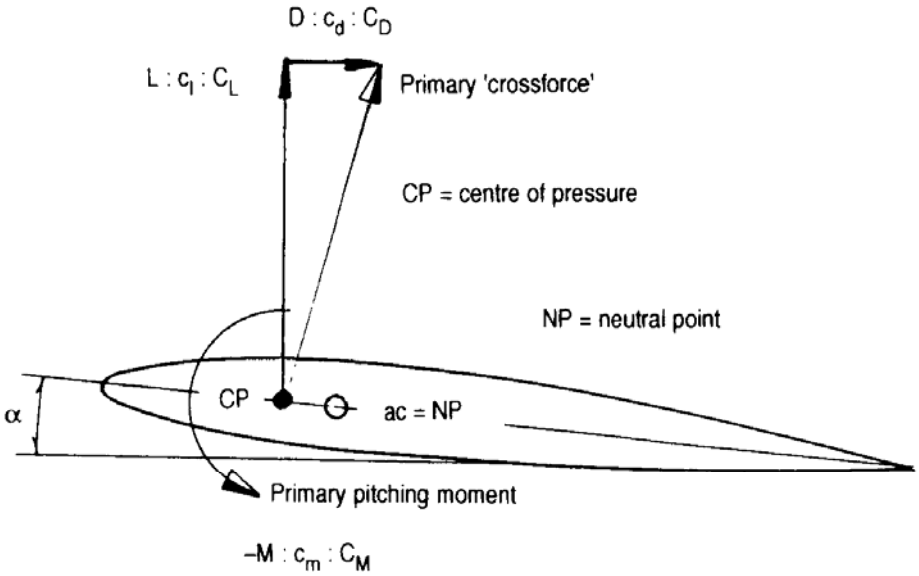

(a) Lift, drag and pitching moment, together with their dimensionless coefficients (Eqns (5-8) to (5-10). The pitching moment, $-M$, is the equal and opposite torque reaction of the air to being given a circulatory component of rotation by the aerofoil in Fig. 5.4. The aerodynamic centre, **ac** = NP, is not far from the quarter chord. C_{Mac}, the moment coefficient about the **ac**, is more or less constant, regardless of angle of attack, α, as shown in (b).

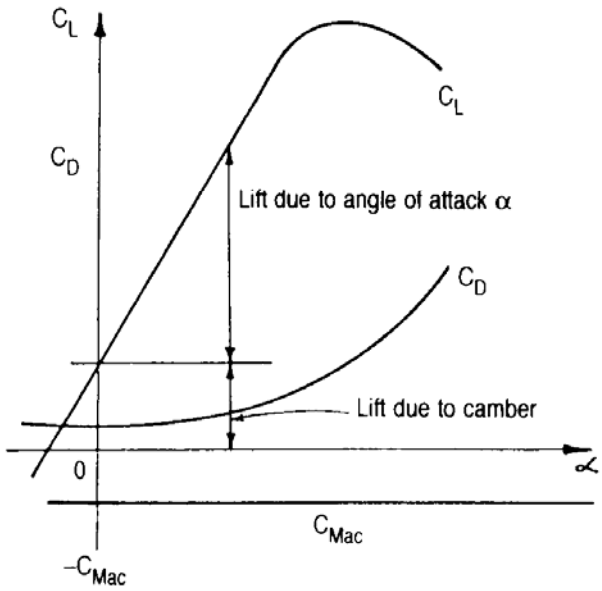

(b) Variation in lift, drag and pitching moment about the aerodynamic centre, **ac**, with angle of attack, α.

Fig. 5.8 Aerodynamic characteristics of an aerofoil section. Note that the whole aircraft: bodies, wings, stabilizer and other surfaces, alters the overall aerodynamic centre, neutral point, and values of c_l, c_d, and c_m, as shown in Eqns (5-5) to (5-10).

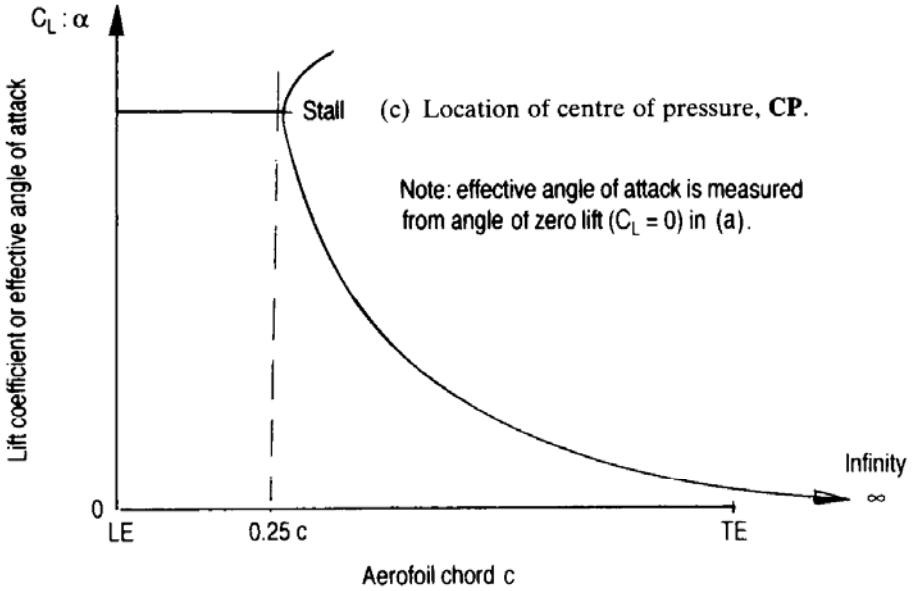

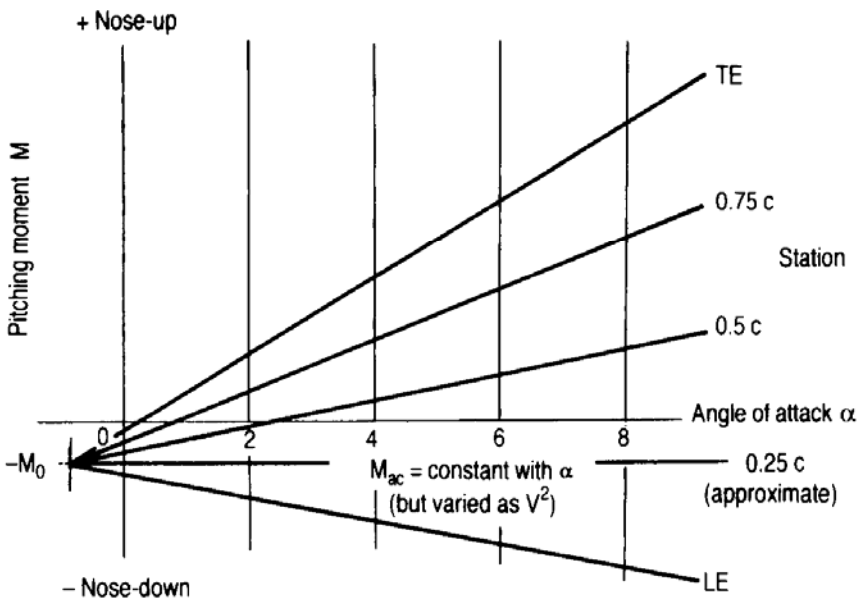

(d) Moment of centre of pressure, **CP**, about different stations on the wing chord, *c*.

Fig. 5.8 (c) and (d) Origin of aerodynamic centre, **ac**, due to movement of centre of pressure, **CP**, in subsonic (subcritical) flight. Compare with Fig. 8.5 when compressibility is present.

The addition of a fuselage (and nacelles) has the effect of moving forward the ac of the aeroplane by 2 or 3% of the mean chord.

The aerodynamic centre is the neutral point of wing(s) plus stabilizer such that

ac = **NP** (5-9)

A way of finding the **ac** by means of a lamina cutout of card is shown later in Fig. 5.11(c).

5.2.4 The boundary layer, separation and loss of lift

In Fig. 5.8(b) the C_L curve is humped and the lift decreases beyond the hump with increasing angle of attack. When the loss of lift is sharp the aeroplane is said to have a clearly defined stall. One wing may stall before the other, in which case a wing-drop occurs. Stalling usually occurs with combinations of large angle of attack and low airspeed, although an accelerated stall can be caused when maneuvering with large normal acceleration and angle of attack. The loss of lift is caused by a decrease in local circulation.

The decrease in circulation causing the stall is brought about by the changing behavior of the boundary layer: a mass of air which, in lying close to the skin of the aerofoil, is dominated by the viscous forces that

cause skin friction. Outside the boundary layer the forces arise more from displacement than from viscosity.

(picture)
Plate 5-1 Behavior of wool tufts on a wing with local boundary layer separations.

In Fig. 5.9 are shown five types of stall, each of which depends upon aerofoil section geometry.

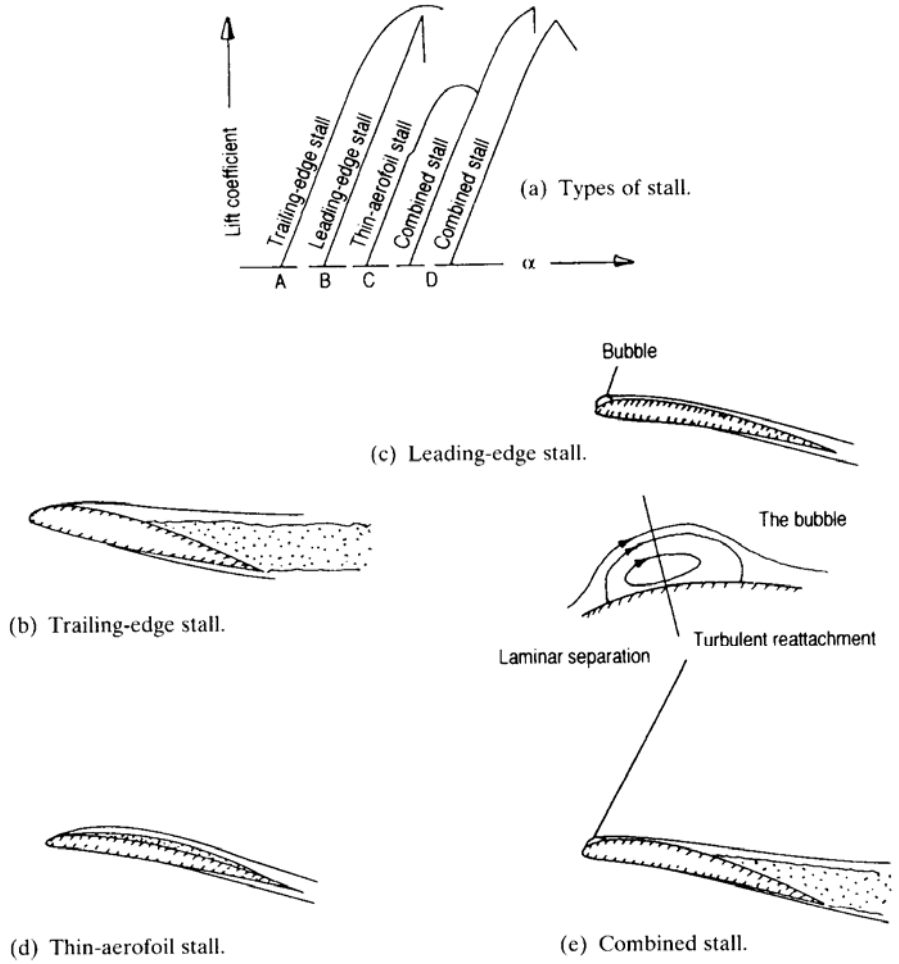

Fig. 5.9 Types of aerofoil section stall.

The picture of the streamlined flow in Fig. 5.5(b) below the stalling angle is necessarily idealized to illustrate the idea of laminar flow, in which the air is assumed to move in smooth sheets relative to the aerofoil. As we saw earlier, however, the air particles are really moving in directed paths, impelled by an aerofoil moving relative to them. The two views are complementary: the essential point linking them is that the motion is directed and the pressure changes are controlled.

Beyond the stalling angle of attack the particles move in a highly disturbed random manner, in apparently unconnected swirls, eddies and vortices. Because the motions are no longer directed and the relative velocity is decreased, the pressure increases. The stall follows the attainment of peak suction over the upper surface of the aerofoil and one may imagine the suction to have been so intense that the air, in returning around the last part of the circuit in Fig. 5.4(b), is drawn far forward in the wake of the aerofoil by the intense pressure gradient. Therefore, instead of the air being left in the vicinity of its undisturbed position when the aerofoil has passed, it is now swept forward with an additional momentum, that represents additional power taken from the aeroplane. The boundary layer is said to have separated from the aerofoil surface when the stall occurs. Separations are accompanied by drag rise and sharp drops in the lift/drag ratio. Airframe buffeting is the result of flow separation.

Near the trailing edge of the aerofoil there can be a reversal of the relative airflow, as air creeps round the trailing edge from the lower to the upper surface. The sense of the motion is opposed to the sense of the lifting circulation and as such may be thought of as reducing the net circulation and lift (Fig. 5.10); this is shown in a wind-tunnel by the behavior of wool tufts on the upper surface of a wing with local separations.

Various artificial methods of controlling separation and circulation are discussed in the next chapter.

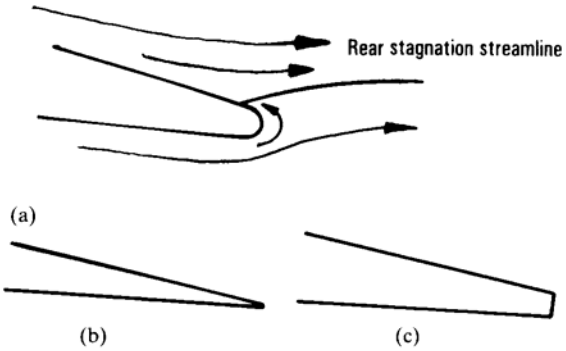

Fig. 5.10 Trailing-edge conditions are most important at subsonic speeds. A rounded trailing edge (a) encourages loss of circulation and oscillatory behavior in the flow which can, in turn, cause a control surface to flutter. Sharp edges are best because they cannot be negotiated by the airflow, which is encouraged no separate in a controlled manner; that shown in (c) makes a flying control surface feel heavier to the hand of the pilot.

5.2.5 Aerofoil planform—aspect ratio

The aspect ratio of an aerofoil has a most important bearing upon the lift/drag ratio and is defined as span^2/aerofoil area. In the case of a wing the aspect ratio is given by

$$A = \frac{b^2}{S} \qquad (5\text{-}11)$$

When an aerofoil is rectangular the area is *bc* and the aspect ratio is, therefore, b/c. Any planform may be reduced to an equivalent rectangle having the same span and area. The chord of the equivalent rectangular aerofoil is called the mean chord, denoted $\bar{c}$, and there is no point here in defining differences between the geometric mean chord, $\bar{c}$, which we shall use, and the slightly different aerodynamic mean chord, $\bar{\bar{c}}$, both are the same for most practical purposes. Figure 5.11 shows the areas of the wing included in aspect ratio and aerodynamic calculations, together with the mean chord and approximate location of the centre of gravity, at 0.25c.

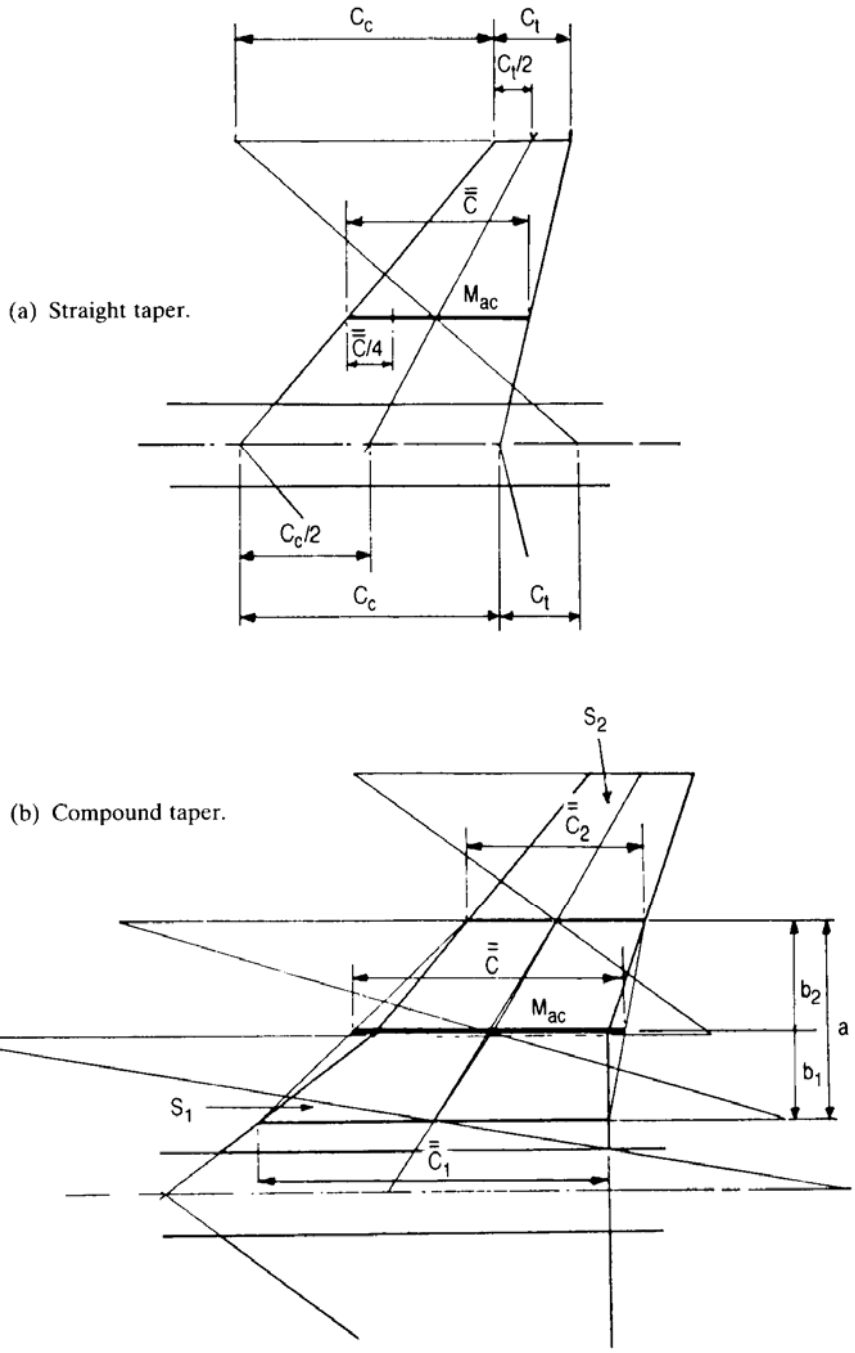

Fig. 5.11 The treatment of wing planform for aspect ratio and mean chord calculations.

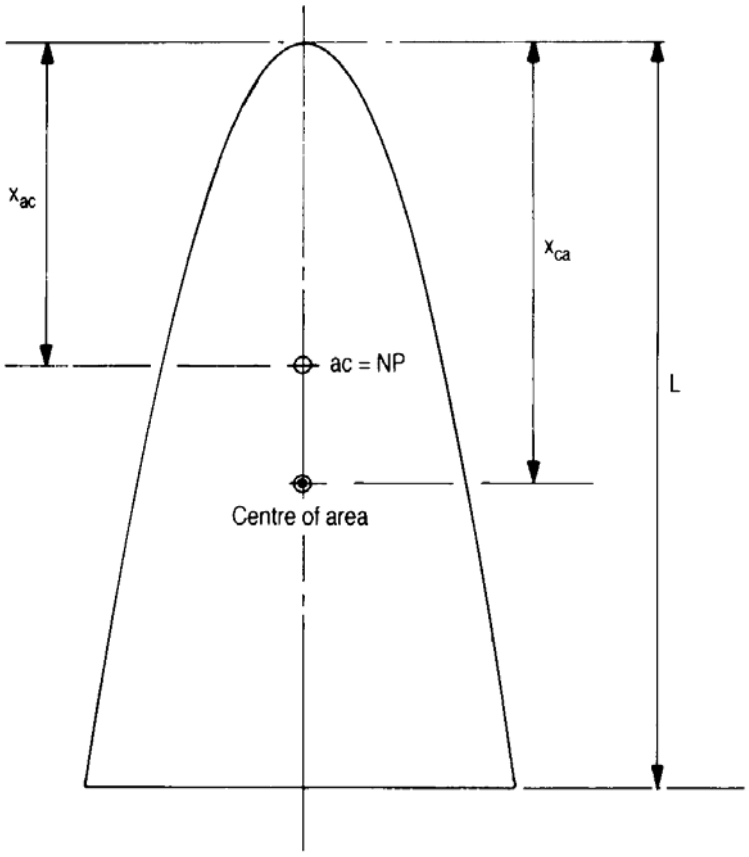

Fig. 5.11 (c) A crude but effective method after A. Spence and D. Lean (1962) enables the aerodynamic centre of an uncambered wing of low aspect ratio (A) to be found at low airspeed, using its centre of area (cut out planform from card and balance on a knife-edge to find x_{ca}).

The **ac** = **NP** lies approximately at

$$(x_{ac}/L) = 2(x_{ca}/L) - 0.75 \qquad (5\text{-}11d)$$

(Note: the author has found that the method works for a wide variety of low aspect ratio thin wing and wing-plus-tail model combinations, all of which fly when balanced at or close to x_{ac}.)

Geometrical construction of mean chord $\bar{c}$

A simplified planform of one half of the wing is drawn as in Fig. 5.11(a), with an equivalent tip chord, c_t, constructed parallel with the plane of symmetry of the wing, as shown in the inset to (a). The leading and trailing edges of the wing are produced to intersect the plane of symmetry, thus forming chord c_c. The chords c_c and c_t, are bisected and a line drawn joining their bisectors.

The tip chord is extended forward a distance c_c, the centre-line chord rearwards a distance c_t. The two ends of the extended chord lines are then joined by a diagonal. The intersection of the diagonal and the line bisecting the centre-line and tip chords gives the distance of the mean chord outboard of the plane of symmetry. A line parallel to the plane of symmetry drawn through the lateral position and joining the leading and trailing edges gives the length of the mean chord, $\bar{\bar{c}}$.

When compound taper is used the same construction can be applied, but this time each separate portion of the wing is treated as a complete entity, as shown in Fig. 5.11(b). Mean chords $\bar{\bar{c}}_1$ and $\bar{\bar{c}}_2$ are determined for the inboard and outboard portions, respectively. Leading and trailing edges are drawn joining c_1 and c_2 to form a mean wing. The chords $\bar{\bar{c}}_1$ and $\bar{\bar{c}}_2$ are then treated as c_c and c_t for the construction of a mean chord between them. The method can be applied ad infinitum for taper of more complicated compound forms.

Aspect ratio, span loading and lift-dependent drag

We have already noted that the strength of circulation varies inversely with aerofoil span. It follows, therefore, that the lower the aspect ratio of an aerofoil the more intense the circulation required to generate a given lift. The stronger downwash behind a low aspect ratio wing reduces the effective angle of attack compared with a wing of higher aspect ratio, so that the lower aspect ratio wing has to be flown at a larger angle of attack to generate the same lift. The stronger circulation around the low aspect ratio wing has the effect of inclining the

resultant force rearwards, as shown in Fig. 5.12.

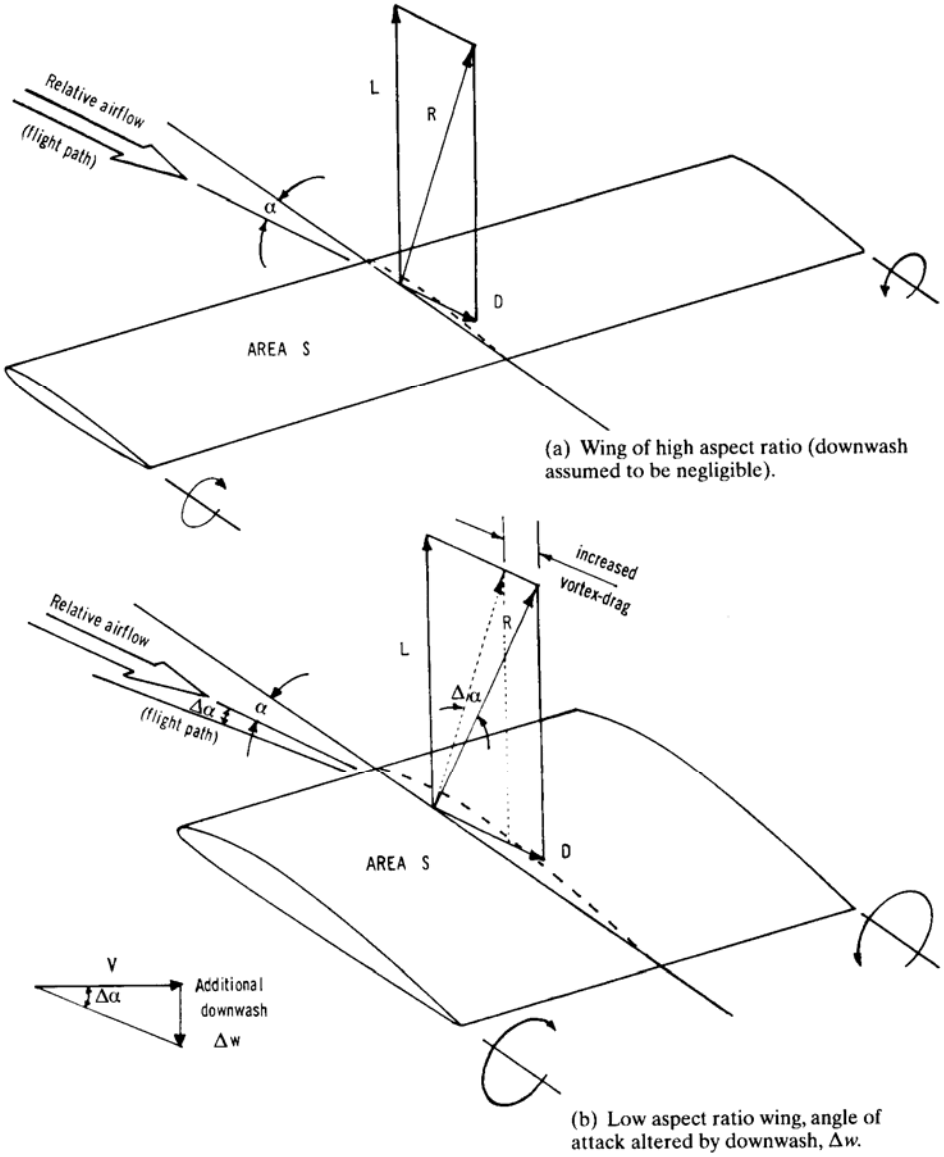

Fig. 5.12 The effect of aspect ratio upon wings of equal area generating equal lift (note increased attitude of low aspect ratio wing to flight path).

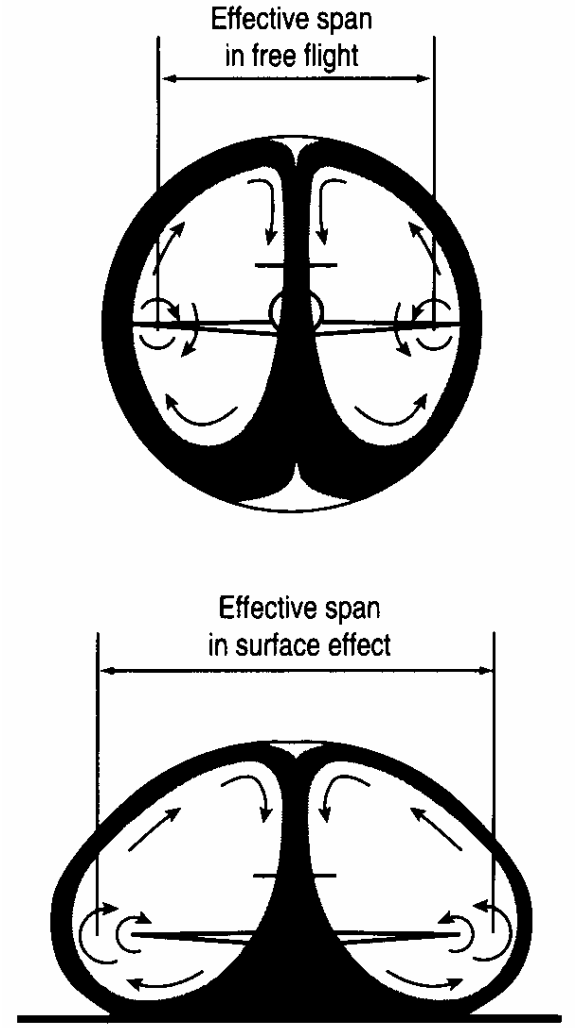

Fig. 5.12 (c) Ground or surface effect alters the cross-section of the mass of air being worked on by a wing, increasing the effective span and aspect ratio, so reducing lift-dependent (induced) drag.

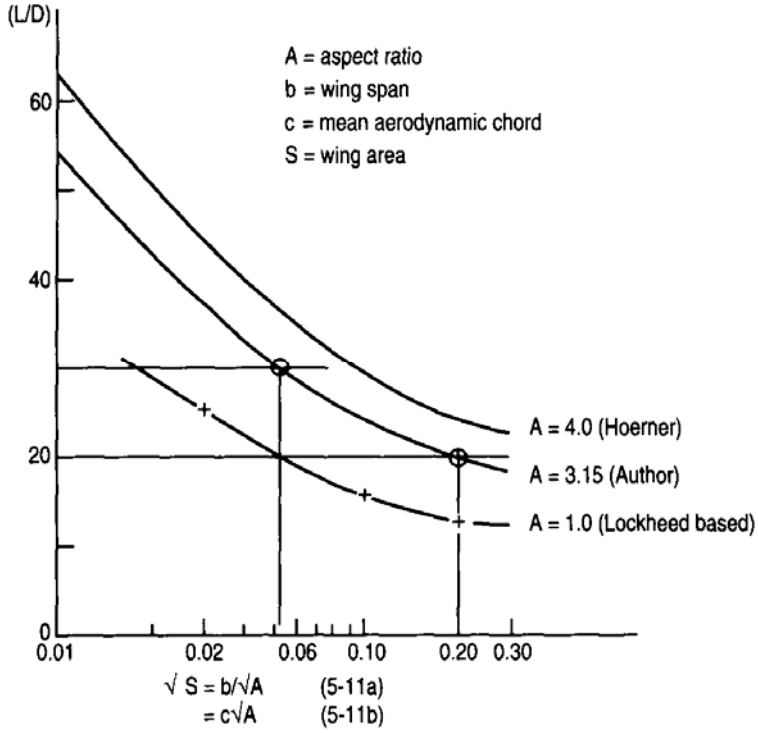

Fig. 5.12 (d) (Lift/drag) ratios of ram-wings, with sidewalls or wing-tip fences, as a function of cruise altitude above the surface over which they operate. Identities (5-ha and b) are derived from Eqn (5-11).
(After Dr-Ing. S. F. Hoerner (1975) Fluid Dynamic Lift.)
Note: for reasons of operational risk the author considers it likely that:

$$h = 0.1\sqrt{S} \qquad (5\text{-}11c)$$

is the most realistic minimum altitude of operation, unless craft are built very large. Then commercial risk

becomes a significant factor.

The relative airflow is no longer almost tangential to the flight path (it is only tangential in theory, when an aerofoil is infinitely long and the distant tips have moved the trailing vortices right out of the picture). As both lift and drag are resolved relative to the flight path, the drag component must therefore be increased by a reduction of aspect ratio.

The drag increment that varies with aspect ratio is called the vortex drag, sometimes it is still referred to as induced drag. The vortex drag is a measure of how much the trailing vortices are intruding to affect the total airflow and pressure field around an aeroplane. The vortex drag is a part of the lift-dependent drag of the whole aeroplane and this depends upon other factors, besides aspect ratio, which influence the whole pressure field surrounding the aircraft.

Once the planform of a wing is fixed, however, in terms of area and aspect ratio, the lift-dependent drag varies inversely with the span loading: defined as the lift carried per unit span, and equal to the weight/wing span (W/b). Examination of Eqn (5-4). shows that

$$\frac{l}{\Delta y} = \bar{p}c \text{ = lift/unit span for the strip of aerofoil considered}$$

For a given wing, in which the chord distribution is already fixed, the span loading is, therefore, dependent only upon the value of $\bar{p}$, the average pressure differential between the upper and lower surfaces. From Eqn (5-5) we see that at a given speed and height (q = constant) the pressure differential is a measure of the lift coefficient of the wing, in other words the angle of attack of the wing to the air. We may argue that, for a given set of ambient conditions and fixed wing geometry, the lower the span loading the lower the lift-dependent drag. For simplicity we may say vortex drag instead of lift-dependent drag, as long as we remember that we are neglecting certain other aspects that alter with, for example, angle of attack at high Mach numbers.

The lower the span loading, the lower the wing loading of a given wing. It follows from the foregoing arguments that, all else being equal, the longer the span of the wing and the lighter the weight of the aeroplane the smaller will be the lift-dependent drag.

The reduced effective angle of attack of very low aspect ratio wings delays the stall considerably. Some delta wings have no measurable stalling angle up to 40^0 or more inclination to the flight path. The drag is so high that the flight path is usually inclined downwards at a steep angle to the horizontal, with the aircraft descending rapidly. Apart from a rapid rate of descent and possible loss of stability and control, such aircraft may have a shallow attitude to the horizon that can be deceptive to a casual observer. The condition is called, picturesquely, the superstall or deep stall, although the wing may be far from a true stall and still be generating appreciable lift. Super stalling is a characteristic of the geometrically ‘slender’ aircraft (see Table 12-3).

Taper

Rectangular chord wings are heavy and uneconomical, the ease of manufacture no longer offsetting the structural weight penalties when aeroplanes are larger than a certain size. Taper is therefore employed to shift the spanwise loading inboard, which reduces the bending moment at the root. Furthermore, taper enables a deeper root to be built, so that a lighter structure can be used in that region to resist the stresses set up by bending and torsion.

Taper has an aerodynamic disadvantage, however. Each slice, or section of an aerofoil may be thought of as generating a circulation that is modified by the adjacent sections. If the span of an aerofoil is sliced into sections of equal width, those inboard, having broader chords and greater thicknesses than those outboard, generate more powerful circulations. The tip vortices do not originate at the tip — vortices are shed across the whole of the trailing edge — but roll into a vortex-skein behind the tip, rather like the strands of a rope. The strong inboard vortices cause a powerful upwash outboard that cancels the downwash inboard of the weaker outboard vortices shed from the trailing edge. Their effect is, therefore, the opposite of that illustrated in Fig. 5.12(b), in which the effective angle of attack is decreased by the downwash. With a tapered aerofoil the effective angle of attack outboard is increased by the upwash effect outboard of the stronger vortices, so that the effective angle of attack near the tips is increased. The tips work at higher lift coefficients and tend, therefore, to stall first. Tip stalling is undesirable, for it leads to asymmetric wing dropping and the danger of a spin. We often find that wings are twisted nose down towards the tips, i.e. they are washed-out, by having a smaller angle set at the tip than at the root. In this way tip stalling may be averted.

The ideal planform for minimum vortex drag is an ellipse, because the downwash is then constant across the span. The spanwise lift distribution is also elliptical. When an aerofoil is joined to a non-lifting body there is a loss of lift at the junction, and a trough occurs in the spanwise lift distribution. Fairings and fillets are therefore fitted to smooth out the troughs, for decreased lift means lost circulation — vortices shed in the wake without doing useful work first — increased drag and reduced performance.

Fairings and fillets are never too large, however, because they increase wetted area and skin friction drag. Where a junction is right-angled one finds either small fillets or none at all. Fillets are most commonly

employed for very high or very low wing—fuselage combinations, for then the angle between curved wing and fuselage is acute and generates the most interference.

5.2.6 Flight in ground (or surface) effect

All aeroplanes operate in ground effect on take-off and landing and when cruising close to the surface of the ground, ice or water. Downwash is no longer able to diffuse itself into the mass of clear air, as in free flight, because the ground gets in the way. Air is compressed beneath the aircraft and caused to spread out laterally so that, depending upon planform, a significantly useful increase in pressure may be felt as many as five wingspans away from the surface. Hoerner, in his two books *Fluid Dynamic Drag* (1965) and *Fluid Dynamic Lift* (1975), ascribes the phenomenon to the downwash of air behind the wing striking the ground surface, reducing the induced angle and induced drag. He reserves the term ‘ram-wing’ (ground-effect machine, GEM; or air-cushion vehicle, ACV) for a wing with end plates or skegs attached to the lower side, which comes very close to the ground or even slices through the water surface.

(picture)
Plate 5-2 The twelve-engined Dornier Do X flying boat, flew long distances in ground effect, carrying 70—80 passengers in 1929.

Ground or surface effect is always present when lift is generated aerodynamically, regardless of altitude. As we have seen, lift is the reaction to air being pushed downwards. Eventually that motion is halted by the surface of the Earth. Were there no surface upon which the air could rest, there would be no gravity, no pressure and no density. The molecules of air, on being displaced, would simply waft away. Airborne flight would be impossible.

In free flight the mass of air being worked on by those parts of the aircraft which contribute to the generation of lift has a near cylindrical cross-section resembling that shown in Fig. 5.12(c). Within the working mass the trailing vortices tend to leave the trailing edge closer together than the span, at a distance approaching ($\pi/4$) or a little more than 78% of the geometric span. Unless the wing tips are carefully shaped, for example by raking them so as to make their trailing edges longer than the leading, the effect is to decrease the aerodynamic aspect ratio (which matters more than the geometric aspect ratio), the span of which is measurable between the cores of the trailing tip vortices, not just the wing tips. It is the aerodynamic aspect ratio which has the most powerful, inverse, effect upon induced or lift-dependent drag.

Close to the ground the downwash is trapped and the circulation is squashed outwards between the ground and the aircraft, Fig. 5.12(c). The tip vortices move apart and there is an effective increase in aerodynamic aspect ratio, and with it the aerodynamic efficiency of the lifting surfaces. Downwash is reduced, together with the drag angle, $\Delta\alpha$, subtended between L and R in Fig. 5.12(a) and (b). On take-off, a low wing, coupled with a vigorous rotation of the aircraft in pitch, can cause it to lift-off prematurely without being aware of the bonus of extra lift from surface effect. Of course, there are dangers in lifting-off too soon and then retracting the undercarriage, because the aircraft may then sink back onto the ground. This has been found by numerous overconfident pilots to their cost. On landing, when speed is decaying and angle of attack is being increased by the pilot, one can feel the cushioning of ground effect in the flare. Then a trickle of power will keep an aeroplane in the air, floating on almost indefinitely, instead of sitting down firmly on the landing surface. Not closing the throttle fully on landing has also cost some pilots dear!

Figure 5.12(d) is based upon Hoerner’s *Fluid Dynamic Lift* (1975) and shows the improvement in lift/drag ratio of a wing, with and without endplates. (L/D) is expressed in terms of $\frac{h}{\sqrt{S}}$, in which h is the altitude and S the wing area, the product of wingspan and mean chord. Aspect ratios of aircraft designed to fly in ground effect tend to be low, because long spans seriously restrict the angle of bank in a turn, and one must be able to turn to avoid obstacles. Therefore, span and chord are similar in order of magnitude. For practical design the author finds it more useful to work with wing chord than span.

Surface or ground-effect is made use of in the design of ram-wing aircraft, called *ekranoplan* in Russia, which are discussed in Appendix G. Designed to operate from land, water or ice, such aircraft suffer a plethora of classifying acronyms outside of Russia: WIG (wing-in-ground (effect)); WIGE (wing-in-ground-effect); PAR-WIG (power-assisted wing-in-ground); channel-flow-WIG (channel wing); WISES (wing-in-surface-effect-ship), etc. Modern applications narrow to maritime use as there are too many obstacles which get in the way on land. Surface effect has been known for a long time, yet only designed for experimentally. The 12-engined Dornier Do X flying boat was found to generate powerful surface effect, which enabled it to fly long distances with 70—80 passengers in 1929. In 1903 the Wright Brothers flew long distances in surface effect, without this being appreciated, as did Lilienthal in his gliders towards the end of the 19th Century. The gliders built by Sir George Cayley half a century earlier even than Lilienthal, which carried his coachman on one occasion and a boy on another, flew low enough to have been assisted by the

phenomenon without him knowing it.

5.3 Supersonic flight

The phenomena of lift and drag have been discussed so far in the context of pressure changes in the air that are too small to significantly affect the density. Changes of pressure caused by the passage of an aeroplane at a speed less than that of sound can be transmitted to other particles well away from the surface of the airframe, and the air can be thought of as being prepared in advance for the disturbance to come.

When an aeroplane flies faster than sound, pressure changes cannot be transmitted ahead of it, so that the aerodynamic shape is determined by reactions from the air that are different from those at subsonic speeds. Aeroplanes grow longer and thinner, curves are shallower, leading edges grow sharp instead of being rounded, surfaces are more nearly tangential to the flight path, so that the rate of displacement of the particles of air is kept as small as possible. The supersonic picture has two aspects that together help to explain the different shape of the supersonic aeroplane.

5.3.1 Compression and expansion waves

Imagine the source of a pressure pulse to be the pointed nose of a projectile (although any other point would do, in fact a sharp leading edge is made up of a line of such points). At very low speed the disturbance of the air by the moving point would spread out spherically through the surrounding air, like the much larger waves from a chiming bell. The waves all travel away from the source at the local speed of sound. As the source accelerates to higher speeds, however, the pressure pattern begins to change as each pulse is made further and further ahead of the previous one. These two cases are shown in Fig. 5.13(a) and (b), in which the source is initially almost stationary and is then seen moving at a speed half that of sound, M = 0.5.

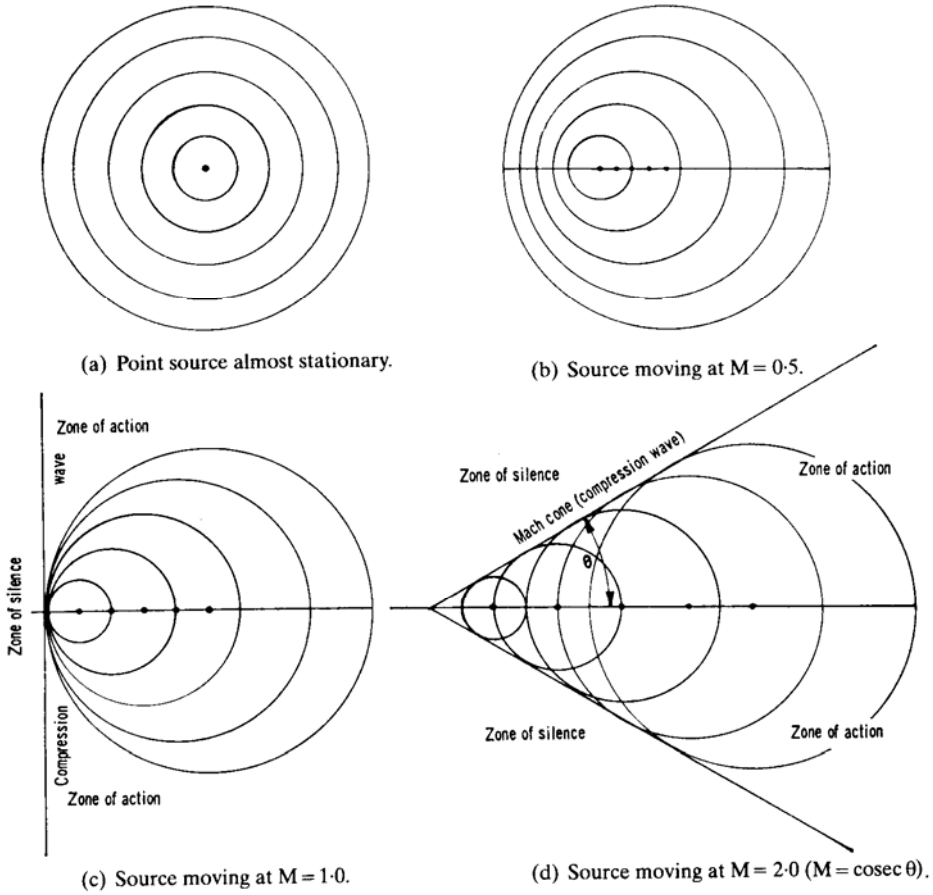

Fig. 5.13 The generation of the compression wave and Mach cone (after T. von Karman).

As long as pulses precede the source the air particles lying in its path receive warning of its approach and can begin to adjust themselves beforehand for the coming displacement. The acceleration of each particle is therefore smaller than if it received no warning, and the force required to cause displacement is less.

When the source moves at the speed of sound it moves forward with the advancing pressure pulses, as shown in Fig. 5.13(c). Ahead of the source lies a zone of silence and behind is a zone of action, while between them is a sharp pressure wave formed by the piled-up pulses. When the source moves faster than sound successive pulses are sent out from points ahead of the preceding ones and the pressure wave generated by the source takes on a conical form. The resulting Mach cone is unique in that the semi-vertex angle, θ, is related to the Mach number by

$$M = \frac{V}{a} = \operatorname{cosec}\theta \qquad (5\text{-}12)$$

Now consider the airspeed relative to the source. If the source is considered to be stationary the air ahead of it is moving towards it with speed V, while behind the cone the relative airspeed is less than V. This is the situation in a wind-tunnel where the formation of shock waves (the Mach cone is a conical shock wave — shock because of the sharp pressure change through it) marks a deceleration in the flow relative to the source. Clearly, for a relative deceleration to have taken place, the air in the zone of action must have been swept along to a certain extent by the moving source.

It follows that if the air behind the Mach cone has been swept along by the source, then such a wave must be a cause of drag. Applying Bernoulli's theorem, the static pressure must be higher in the air behind the cone than in the silent region ahead. If the source is part of an aeroplane, then there must be another process of changing the pressure of the air back again to the undisturbed value as the aeroplane passes. The process of decreasing the pressure is by accelerating the air again, relative to the aeroplane, through an expansion wave.

Consider a supersonic body passing through a mass of air contained within an imaginary cylinder, as shown in Fig. 5.14.

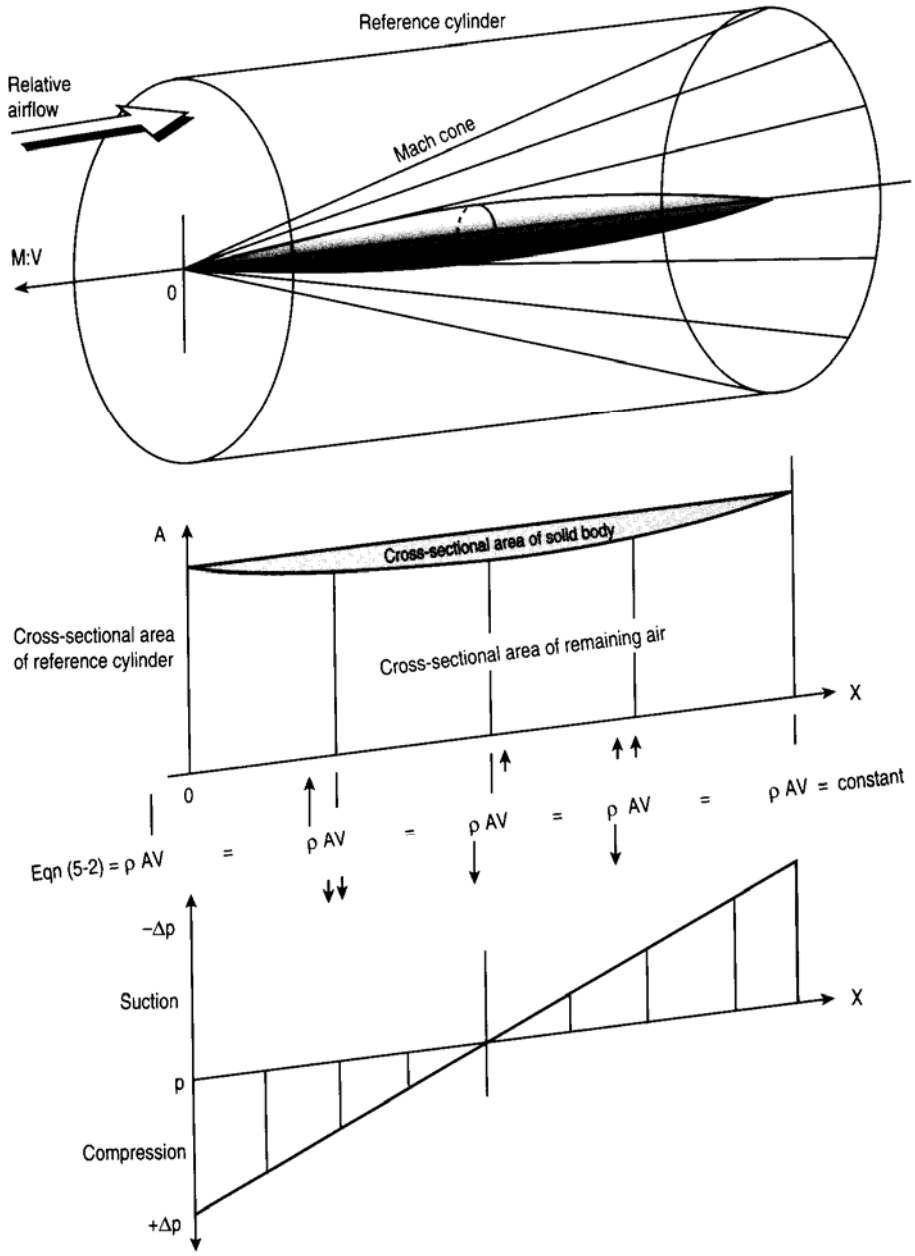

Fig. 5.14 Pressure distribution along solid body moving at zero angle of attack through a compressible fluid.

The cylinder defines the limit of the undisturbed air during the interval of time between the nose and tail passing a datum point. Beyond the cylinder the air is only disturbed after the body has passed. Inside the cylinder the air is disturbed during the actual passage. The cylinder has a cross-sectional area, A, that is reduced from a maximum to a minimum at the mid-point of the body, increasing to a maximum again at the tail. As the body is moving along the cylinder of air faster than pressure pulses can be transmitted, the air is compressed by the forward surface of the body, with a corresponding decrease in velocity relative to the body

and an increase in pressure. As the slope of the forward-facing surface decreases, however, the compression is reduced until, as the mid-point of the body passes, the area opens out, allowing the compressed particles of air to expand again. The air is therefore accelerated, relative to the body (in reality only trying to move back to where it was pushed away from), and the pressure in that region is decreased to a suction over the rearward-facing surface. This is the opposite of the case at low speed, when the air is sensibly incompressible. A shock wave occurs at the tail where the rearward movement of the air is terminated and the pressure finally readjusted back to the ambient value.

The frontispiece, of fighters no longer in front-line service, nevertheless shows very clearly the formation of shock and expansion waves experimentally and in practice. The expansion waves are marked by water vapor condensing as mist.

The drag caused by compressibility of the air is termed wave drag, which has two components. The first is due to the distribution of volume along the length of a body, and this is independent of the lift generated. The second is due to the lift generated, as may be seen from Fig. 5.15, in which the slope of the pressure diagram is similar to that shown in Fig. 5.14, except that the values have been altered by the angle of attack and, hence, the inclination of the surfaces to the air.

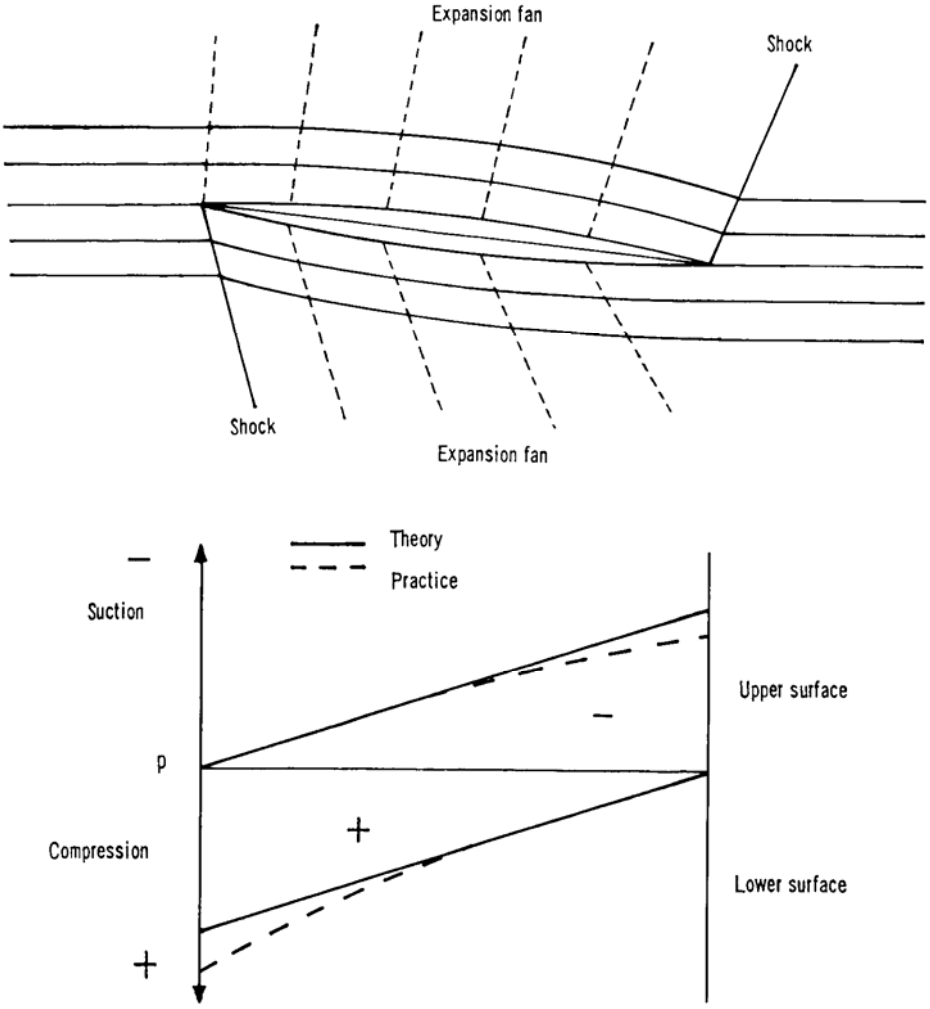

Fig. 5.15 Supersonic biconvex aerofoil section with angle of attack equal to leading-edge surface angle, showing lifting pressure distribution.

The double-wedge aerofoil section is a simpler section to make than the biconvex version, although a biconvex section gives a more flexible performance throughout the flight envelope. When an aircraft is designed for one performance mode (e.g. an anti-aircraft missile) then a wedge is more convenient. The experimental North American X-15 employed single-wedge fin surfaces, as shown in Fig. 5.16(f), and in this way eliminated the rear-facing wedge surfaces which, in experiencing a suction, contributed to the drag as much as a flat base. In this way the weight of the fin surfaces was reduced without loss of control effectiveness.

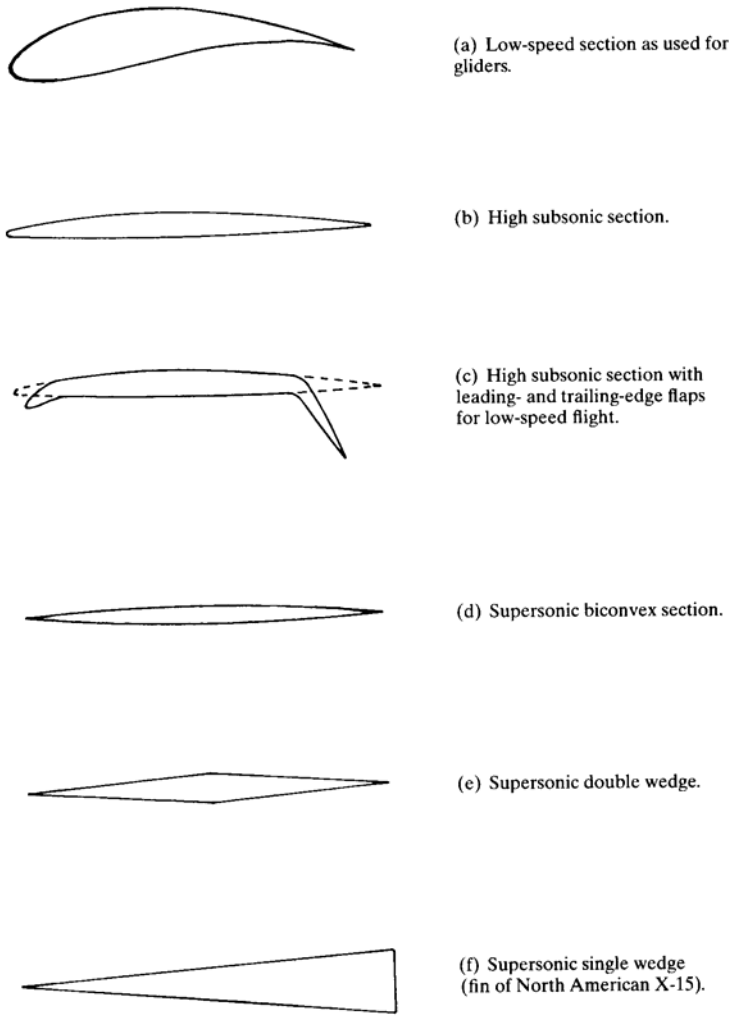

Fig. 5.16 Typical aerofoil sections.

The wave drag is minimized by selecting the optimum area, or volume distribution along the length of the body. A Sears-Haack profile, rather like Fig. 5.14, is such an example. Area and volume distribution is an important design technique that will be discussed under area-ruling, in the next chapter.

5.4 Lift and drag summary

The generation of lift is achieved by establishing a favorable pressure distribution over aerodynamic surfaces. At subsonic speeds, where the air is assumed to have negligible compressibility, this is achieved by an induced motion of the air particles known as circulation. Circulation is the origin of the vortex system accompanying a lifting surface, which in turn is the origin of the vortex drag: the price to be paid to nature in return for the lifting-service rendered. The pressure distribution, even when the surface is not lifting, contributes to the drag, along with friction arising from the viscosity of the air.

At supersonic speeds lift is generated by the establishment of a pressure distribution that arises from a different motion of the air particles. The particles no longer circulate — they do not have the time before a body has passed — instead they suffer a much more violent piston-like displacement which causes an initial compression, that must be followed by expansion back to the initially undisturbed condition. The supersonic pressure distribution generates higher drag, because of the more intense compression and suction forces. The additional drag is called wave drag. Skin friction drag is still present. Figure 5.17 compares the typical pressure distribution over a wing section at subsonic and supersonic speeds.

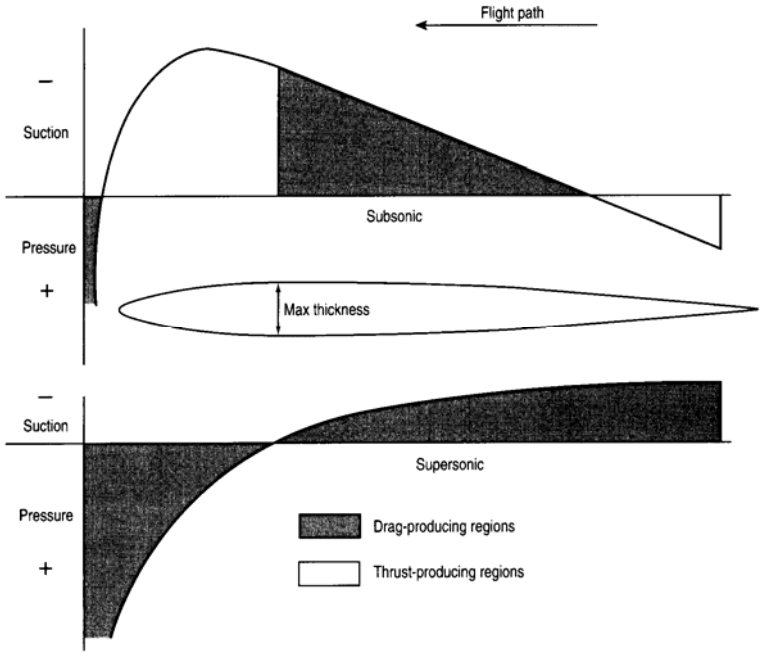

Fig. 5.17 Typical pressure distributions over an aerofoil at subsonic and supersonic speeds (compare with Fig. 5.14).

At subsonic speeds aeroplanes have wings of high aspect ratio and the span may exceed the length of the body. At supersonic speeds aeroplanes must grow longer in the direction of flight and, so that drag may be minimized, they are also arranged to lie (as far as possible) inside the Mach cone shed from the nose of the body. It follows that for minimum supersonic drag aeroplanes have lower aspect ratios than their subsonic counterparts. At subsonic speeds a supersonic aeroplane has a higher drag than a subsonic machine of comparable size, generating the same lift. Figure 5.18 summarizes the various drag components and the aspects of shape that contribute to the magnitude of each.

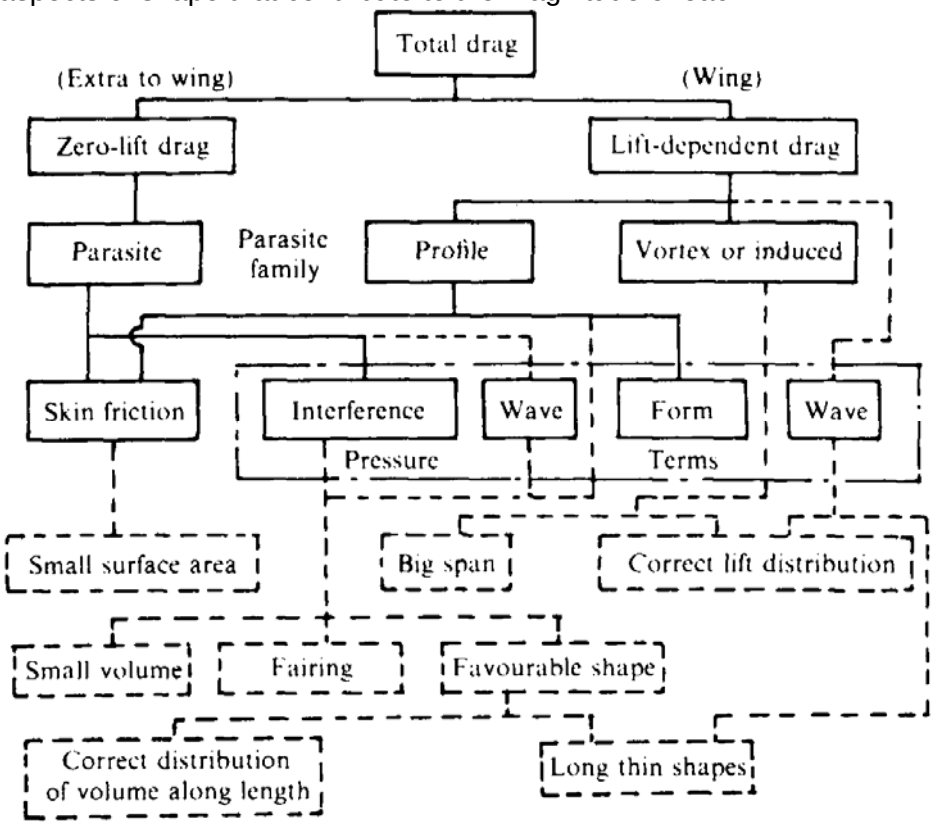

Fig. 5.18 Total drag components. The dotted lines show features that reduce the various drag components, but some features work against others, e.g. long span versus long thin shape.

5.5 Scale effect and Reynolds number

The size, or scale, of an aircraft relative to the molecules of air through which it passes has a profound effect upon the relative airflows over its surfaces. The magnitude of the aerodynamic forces generated; the point at

which an airflow breaks down from being smooth and laminar to turbulent; and its point of ‘separation’ from a surface, i.e. being replaced by a mass of largely stagnant air travelling at little or no speed at all relative to the skin, are all determined by what is called Reynolds Number, which is a direct measure of *scale effect*.

Reynolds number, R (often R_l or R_X) is a pure number named after Osborne Reynolds (1824—1912), Professor of Engineering at the University of Manchester, who in 1883 carried out systematic experiments on the transition of flows from laminar to turbulent. Turbulent flows had already been analyzed by a German engineer, Gotthilf Heinrich Ludwig Hagen (1797—1894). Figure 5.19 shows the change in nature of a flow about the same body with change in R_X.

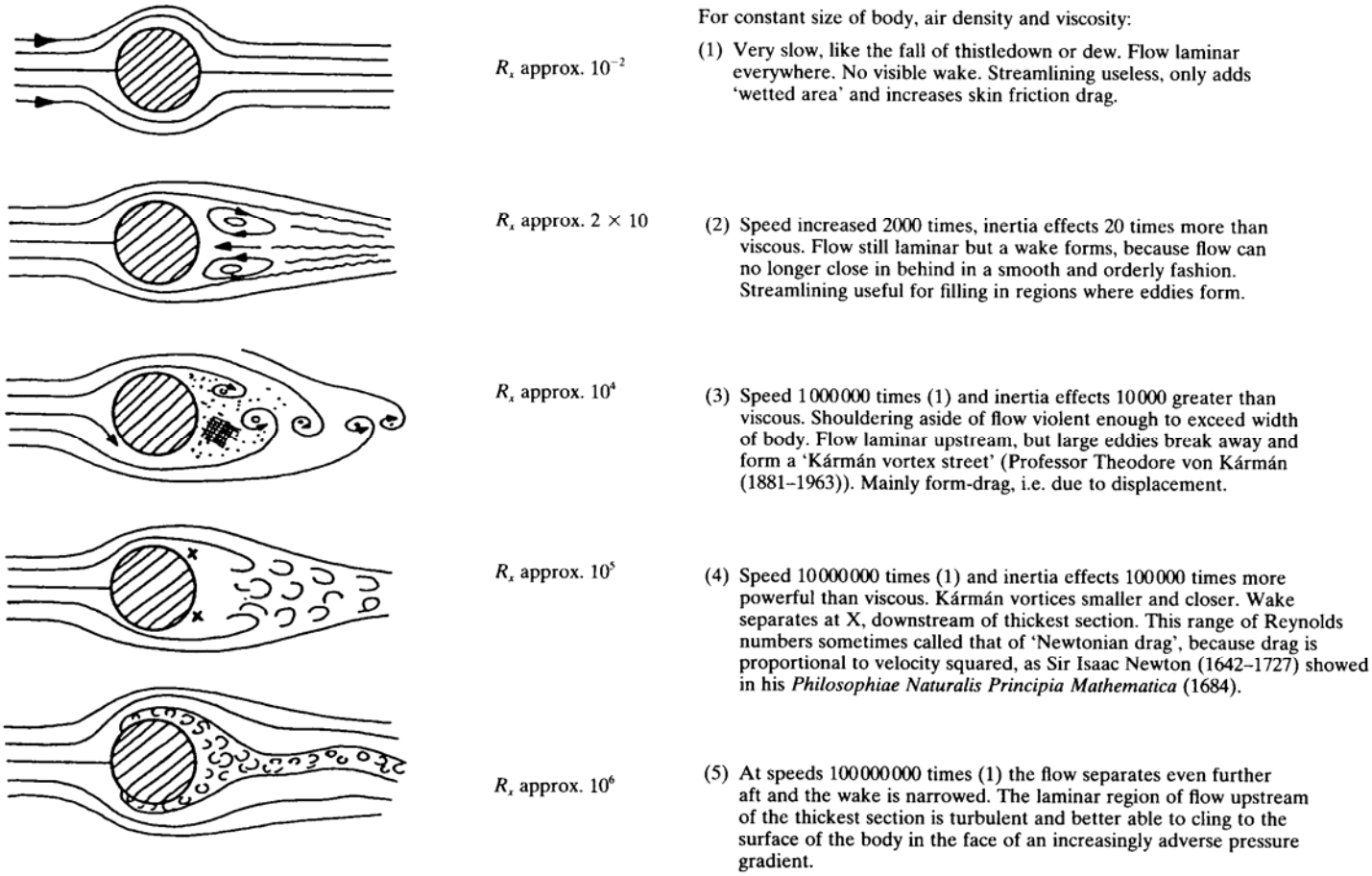

Fig. 5.19 Air in laminar and then turbulent motion. Reynolds number R_X (see Eqns (5-13) and (5-14)).

Reynolds number is important, because as long as two bodies, or surfaces, of similar shape even though differing in size, have the same Reynolds number, then the flows around them remain geometrically similar. The aerodynamic forces generated are then comparable, the proportionality being the square of the scale. Double the scale of a wing, say, and the aerodynamic forces increase as $2^2 = 4$. The physical way in which Reynolds number is the indicator of scale effect is as follows:

Reynolds number, R_X = inertial factors which excite air molecules / viscosity which quietens and soothes them (5-13)

5.5.1 Factors which agitate and excite a fluid

(a) *Scale*: size of body (l) or length of surface (x) which agitates the molecules in their passage over it. In the case of an aerofoil section we commonly use local chord length, c, for localized effects, and SMC, $\bar{c}$, for whole aircraft.

(b) *Density* of fluid, ρ, and, hence, the crowding of particles which encourages jostling between them within the volume of fluid in contact with the given length of surface. The denser the fluid the more easily is turbulence spread.

(c) Velocity of the body relative to the fluid, V.

5.5.2 The factor which soothes and quietens motion

(a) *Dynamic viscosity*, μ, measures the ‘treacliness’ of the fluid. Hence

$$R_x = \frac{V \rho x}{\mu} = \frac{V x}{\nu} \qquad (5\text{-}14)$$

in which $\nu = \frac{\mu}{\rho}$ the coefficient of kinematic viscosity.

At low Reynolds numbers, less than about $R_x = 5 \times 10^5$ on an aerodynamically smooth surface (critical roughness less than the thickness of the laminar sublayer), the flow is laminar and relatively thin. Roughness which protrudes through the laminar sublayer spreads excitement and causes transition to turbulence. Smooth laminar conditions break down and by about $R_x = 5 \times 10^6$ the boundary layer becomes thick and turbulent (Fig. 5.20).

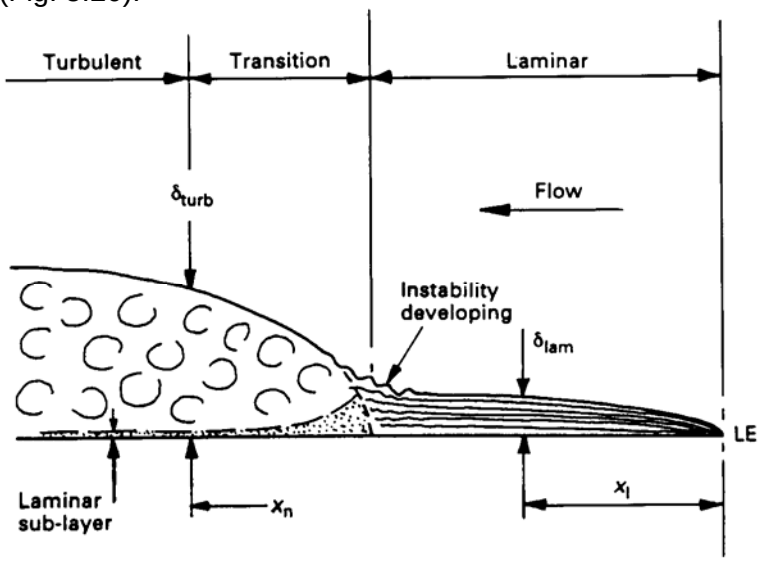

Fig. 5.20 Change of boundary layer from laminar to turbulent at a distance x downstream of the leading edge (in this case of a sharp-edged flat plate).

Transition from laminar to turbulent flow may oscillate, varying at a point on a surface by as much as ±30% of the distance x.

It is hard to achieve and maintain laminar flow for any distance. Hoarfrost and raindrops on a wing will trip the flow from laminar to turbulent. A paint-scuff, a rivet head, a strip of fashionable ‘speed tape’ or a dented engine cowling can do the same thing, ultimately causing one wing to stall before the other. The rate at which a disturbance spreads is a function of the diffusing power of viscosity, which carries the motions of molecules out into successive layers of air, all the time slowing them with friction. Inertia (the reluctance of air to move out of the way of a body, and then close in again behind) opposes diffusion. The greater the ‘momentum’ of the flow (the product of density and relative velocity), the larger is the scale of the disturbance needed to alter it. On the other hand, the larger the scale of the surface the more slowly does any change of momentum take place.

Reynolds number enables data measured on a model in a wind-tunnel to be applied to the full-scale aircraft. Similarly, aerodynamic characteristics of several aerofoil sections should only be compared at the same Reynolds number.

Chapter 6 The Control of Lift and Drag

So far we have considered the 'classical' generation of lift and drag in general terms, by the use of suitably shaped aerodynamic surfaces. Once an aircraft of a given size is specified, and the design point settled, there arises the particular problem of determining the optimum shape of the aeroplane. The optimum shape is not the 'pure' basic shape to satisfy conditions at the design point, for aircraft must be flexible enough to operate safely and with reasonable economy off-design.

The optimum shape has 3 aspects:

(a) The basic shape in its purest form, satisfying the conditions at the design point alone.
(b) Changes of the basic shape in flight to improve off-design performance, the aspect being considered under the general heading of 'variable geometry'. Under this heading we can include the application of power to establish the required airflows.
(c) Fixed modifications of the basic shape to improve local airflows. This aspect covers the various kinds of aerodynamic palliatives or 'fixes' that are employed, and the treatment of wing-body junctions to reduce losses through interference.

The resultant aerodynamic efficiency of the aeroplane is measurable in terms of the lift/drag. The three aspects of shape must all be balanced according to the role requirements, but for the purposes of discussion these are considered with regard for the optimum lift/drag when range flying.

6.1 The basic aerodynamic shape

We know that the shape of an aeroplane varies with role and flight regime, for this has been shown in Fig. 2.2. In considering the aerodynamic reason we shall simplify the problem by only thinking of the wing plus body combination; the stabilizing surfaces belong to a further problem, that of keeping the aeroplane flying at the required attitude to the air.

6.1.1 Design for subsonic flight

The principal aerodynamic features of subsonic aeroplanes are the lack of wing sweep and the presence of a fuselage that is discrete from the wing in every respect. The shape of the fuselage usually resembles a streamlined cylinder, that may also be considered as a very low aspect ratio aerofoil. The profile thickness distribution is similar to that of the aerofoil sections used in the particular flight regime, as may be seen in Fig. 6.1, in which a low-subsonic fuselage is compared with a supersonic fuselage of the same minimum cross-section, as determined by the height of a man. It should be borne in mind that the supersonic fuselage shown carries about double the payload of the subsonic version. The existence of a discrete fuselage, as well as any other discrete body, alters the wetted area of the aeroplane and, hence, the skin-friction drag in the proportions shown in Fig. 6.2. The proportions apply equally well to all flight regimes.

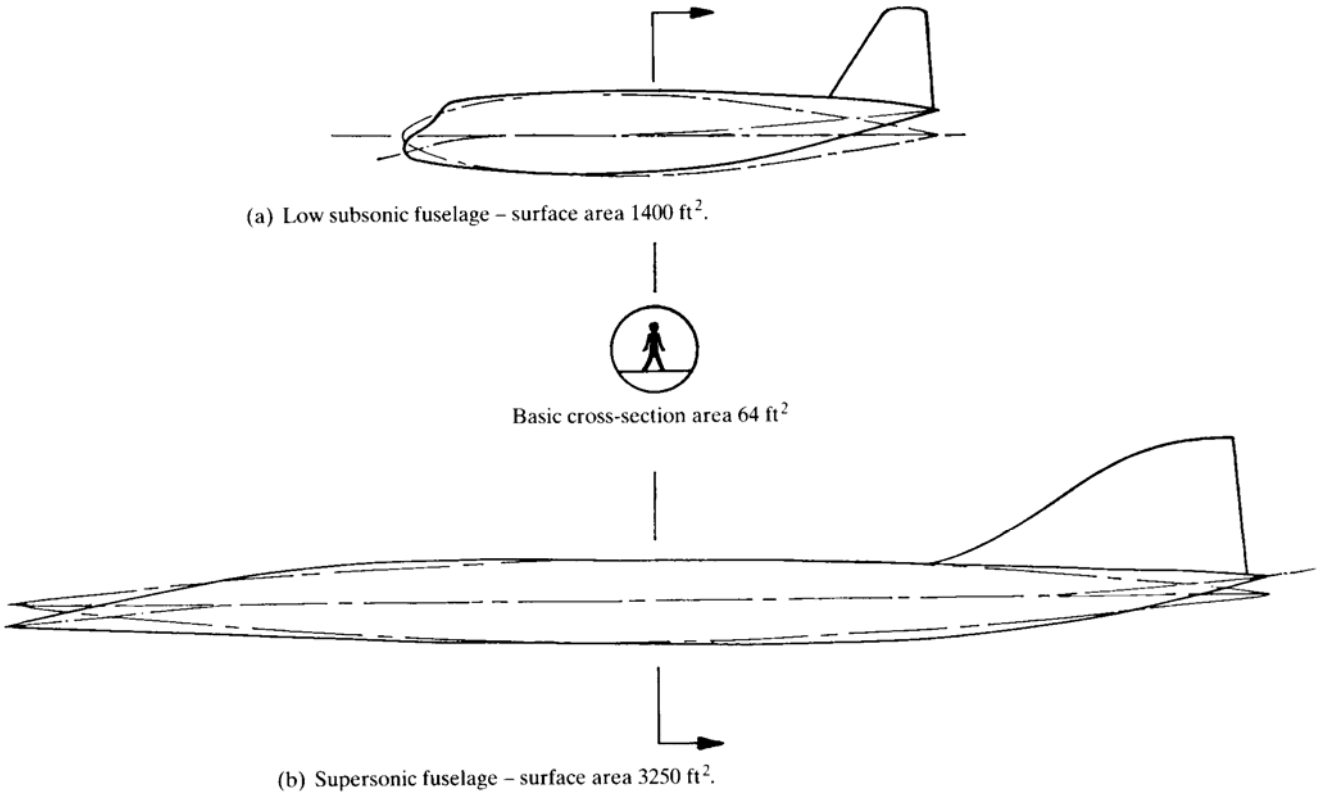

Fig. 6.1 Comparison of typical low and high-speed transport fuselages. Approximately equivalent aerofoil thickness distribution shown.

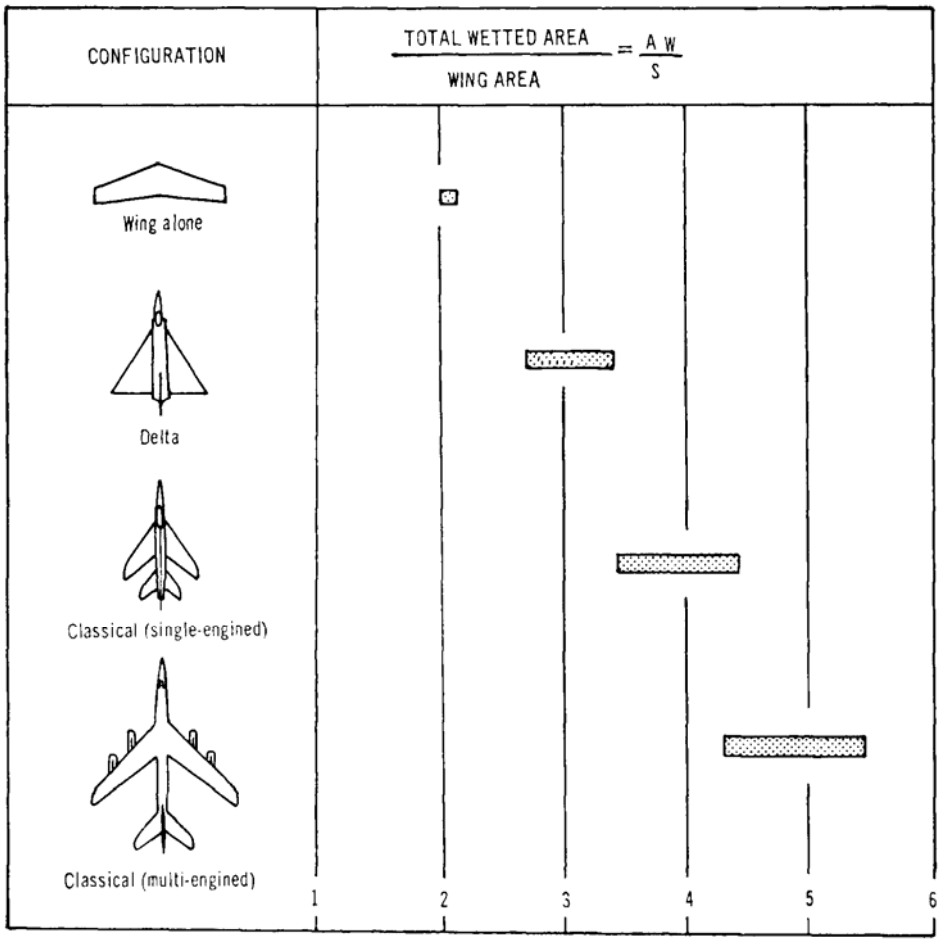

Fig. 6.2 Wetted area of airframe in terms of wing area for different configurations.

The sweep of a wing requires some definition, for some subsonic aeroplanes appear to feature swept wings but the reason is different from that for aircraft designed for higher speeds. A wing is said to be unswept if it has zero sweep to any spanwise line between 25 and 70% of the chord. Swept wings have appeared on low-subsonic aeroplanes as aids to stability, either as a way of arranging the centre of gravity and aerodynamic centre in the correct relationship, or as a means of increasing the moment arm of a control surface in a tailless design. On subsonic aircraft designed for higher speeds we shall say more in a moment.

Wing section thickness ratios are of the order of 12%, while the point of maximum camber lies well forward, making sections humped-looking, with well-rounded leading edges. Aspect ratios are high, being around 10, with lift/drag ratios of 15-20. Invariably the stabilizing surfaces appear at the tail in the form of tailplane and elevator, fin and rudder.

The subsonic aeroplane represents the 'classical' layout in what is probably its most efficient form. The classical layout had been used successfully for so long that it was adapted and modified as much as possible in the years following the appearance of the turbojet. It is only recently that technology has advanced far enough for reasonably efficient supersonic-cruise aeroplanes to be designed. Although supersonic lift/drag is lower than subsonic, and the sfc of supersonic engines is high, speeds have now been reached where the product:

$$\frac{V}{c'}\frac{L}{D}$$

in Eqn (4-10) falls within a range of 'good' values for range-flying efficiency. Until the truly supersonic aeroplane appeared, high-speed aircraft were really only transonic, in the sense that their shapes were designed in such a way as to make the air behave in a subsonic fashion, as though nothing unusual was happening to it.

Transonic design features: sweep and area-ruling

The outstanding feature of the transonic aeroplane is the swept wing in its different guises. The use of wing sweep to delay the onset of compressibility was suggested by A. Betz in 1939, after Busemann had drawn attention to such advantages of the swept wing at supersonic speeds at the Volta Congress in Rome in 1935.

To understand the effect of sweep (swept aerofoils are often referred to as yawed or sheared aerofoils) let us reconsider what happens to the air when impelled to move by a body at a speed very near to that of sound (the speed at which air adjusts itself to a disturbance). We have seen that as particles of air are forced

over the surfaces of an aerofoil they are impelled to move relative to their undisturbed positions: to circulate. The magnitude of such movement depends upon the thickness distribution of the aerofoil section and the camber, which together determine the slope of the surface impelling the air to move. If an aerofoil is swept (forwards or backwards) through an angle, Λ, then the geometrical effect is to decrease the thickness distribution of the section. In Fig. 6.3 a parallel chord aerofoil is shown, in which case the thickness ratio decreases in proportion to cos Λ.

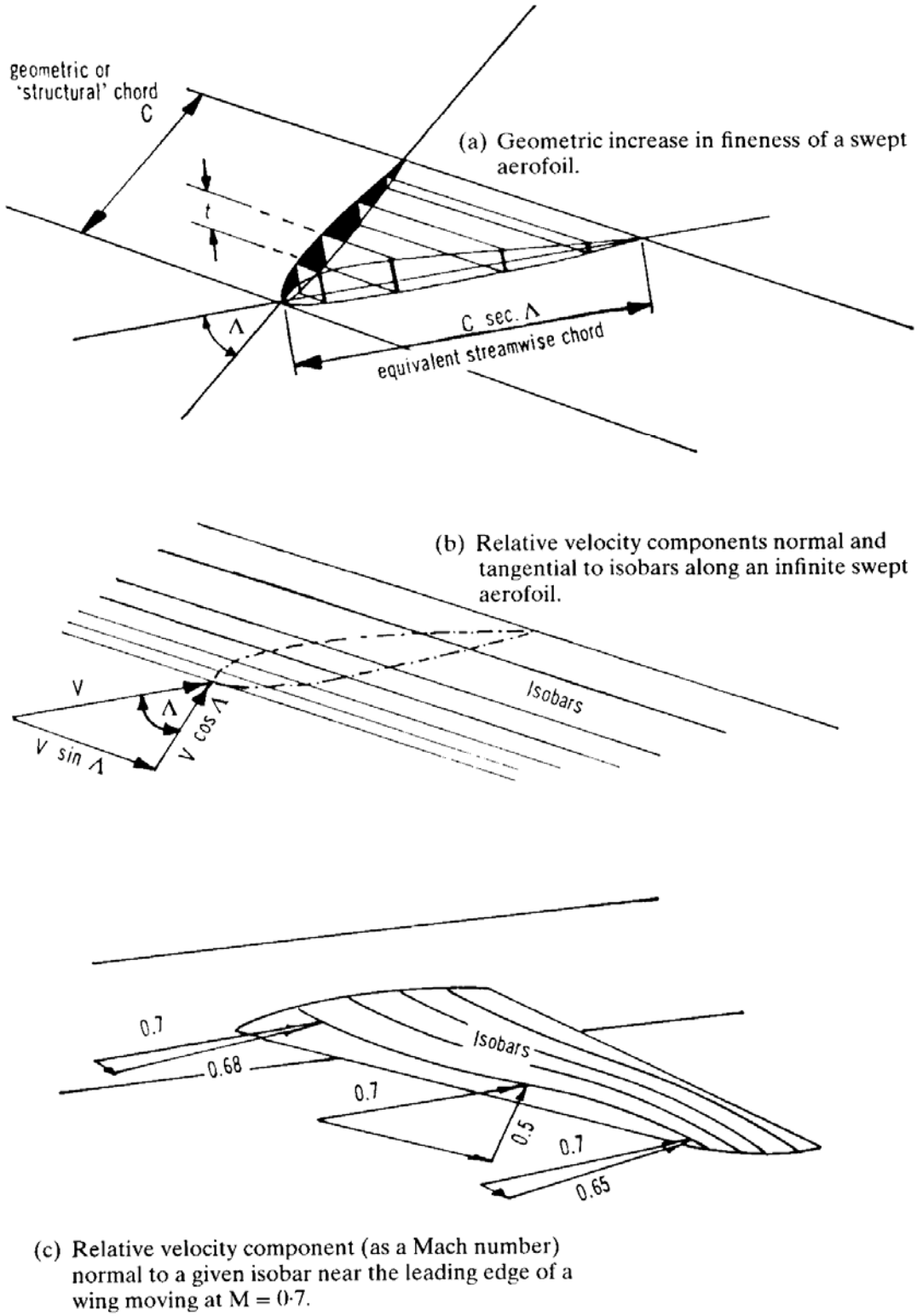

(a) Geometric increase in fineness of a swept aerofoil.

(b) Relative velocity components normal and tangential to isobars along an infinite swept aerofoil.

(c) Relative velocity component (as a Mach number) normal to a given isobar near the leading edge of a wing moving at M = 0·7.

Fig. 6.3 The theory of sweep.

Clearly then, the air is displaced by the finer section in a longer time, so that the air has more time in which to adjust itself to the disturbance. Since drag-rise is roughly proportional to the square of the maximum thickness/chord, the aerodynamic advantage of thin sections is obvious (but thin sections raise many structural strength problems).

If lines are drawn joining all points of equal pressure over an aerofoil surface they form a family of isobars, as shown in Fig. 6.3. There are 2 important features to be noted about isobars, both of which determine the pressure gradient across a surface:

(a) The intensity of pressure that each represents.
(b) Their spacing.

If the change of pressure is intense, or the isobars are close together, then the pressure gradient is steep and it is likely that the ultimate readjustment of the air to its undisturbed condition will be violent, with undesirable characteristics.

It follows that the critical conditions governing the behavior of the air on a surface are to be found on a line along which the gradient is measured, lying normal to the isobars through the region in question. We may now apply a mathematical artifice and postulate that the critical pressure gradient is a function of the component of velocity normal to the isobars - for practical purposes the component across the geometric chord, normal to the quarter-chord axis of the aerofoil.

If an aerofoil is yawed, then the critical velocity component is reduced. In the case of a theoretical infinite aerofoil of parallel chord, the isobars lie parallel to leading and trailing edges. The presence of both fuselage and wing tips alters the isobar pattern and, thus, the effect of sweep along the span. In Fig. 6.3(c) the aircraft is assumed to be flying at M = 07 or thereabouts, but the wing root and tip are nearer to their critical Mach numbers for compressibility effects. For this reason we find unusual changes of camber in the vicinity of roots and tips of transonic aeroplanes and also wing roots with additional sweep, giving the wing a crescent shape and tips with increasing curvature from leading to trailing edge that, in effect, progressively increases sweep outboard (these are called streamwise tips), all for the purpose of achieving constant isobar sweep (see Fig. 6.19).

The unpleasant effects of compressibility are rapid drag-rise, loss of lift, breakdown of local airflows (shock stalling) and buffeting that may be damaging to the airframe and destabilizing from its effect upon control and tail surfaces. These are caused by the air reaching supersonic speeds at some point on the surface of an aerofoil. The deceleration back again to subsonic conditions takes place in a very short distance, through a shock wave (measured in parts of one thousandth of an inch), so called because of the violent increase in static pressure. The increase in static pressure is high enough to cause boundary layer separation, with effects similar to the low-speed stall. Figure 6.4(a) shows the general effect of sweepback on the drag of an aerofoil at transonic Mach numbers (i.e. the relative airflow is still subsonic at some point on the surface of the airframe).

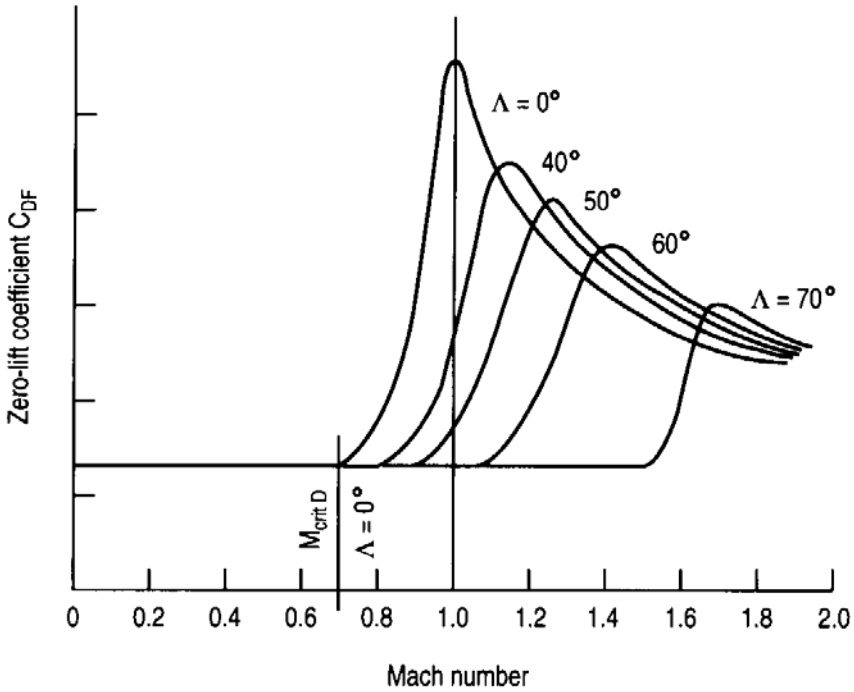

(a) Typical effect of sweep on the zero lift drag coefficient of an aerofoil section at transonic Mach numbers.

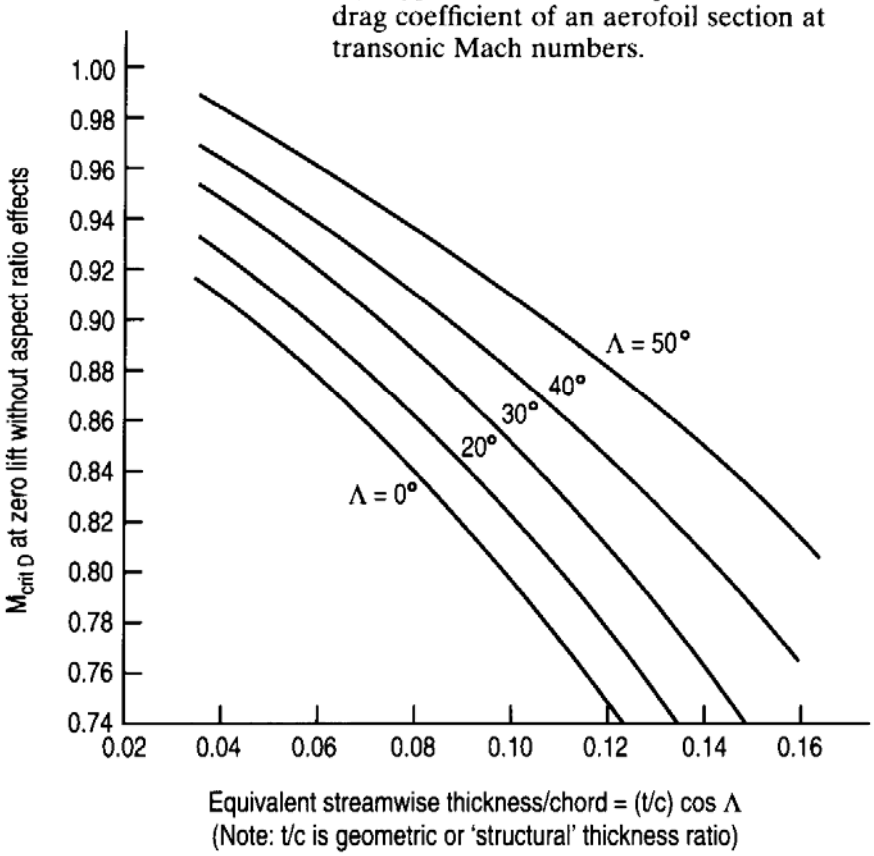

(b) General relationship between aerofoil sweep, Λ, equivalent thickness ratio and critical Mach number.

Fig. 6.4 The effect of aerofoil sweep and thickness on compressibility drag rise.

The flight Mach number - in wind-tunnel terms the free-stream Mach number - at which the relative airflow reaches the speed of sound at some point on the airframe is called M_{crit}. Below M_{crit} the condition of the relative airflow is said to be subcritical, above M_{crit}, supercritical. The situation is hard to determine because one can never be sure of the state of the flow everywhere at once. A more precise value, M_{critD}, is used corresponding with an arbitrary increase in the subsonic drag coefficient of 0.002 or thereabouts, at constant angle of attack. It will be seen that M_{critD} (which almost corresponds with the steep rise of drag coefficient in Fig. 6.4(a)) is increased by sweep.

The general relationship between equivalent thickness ratio (a function of c sec Λ in Fig. 6.3) and

sweep, Λ, is shown in Fig. 6.4(b). The thinner and more highly swept the aerofoil, the higher the M_{critD}.

The second, more recent, feature of transonic aeroplanes is the use of waisting and area distribution, grouped collectively under area-ruling. We saw in the last chapter that there is an optimum area distribution for any design point with which a body generates the minimum wave drag at zero lift. Instead of a solid of revolution, consider an aeroplane within an imaginary reference cylinder, as in Fig. 5.14. It is possible to shape the fuselage cross-sections so that the bulge in cross-sectional area caused by the wings and tail are faired more smoothly into a profile giving lower wave drag. Paradoxically, area-ruling may cause a growth in local cross-sectional area by the presence of fat bulges between wing and tail, or the growth of carrot-like shock bodies at the trailing edges of the wings (Kuchemann Carrots). Area-ruling is shown dotted in Fig. 6.5(a). Figure 6.5(b) and (c) shows, in a slightly different way, how the waisted fuselage generates expansions and compressions that cancel the effects of the wing compressions and expansions. It will be remembered that shock waves and similar compression phenomena are caused when the air is squeezed into a smaller volume. Conversely, expansion waves are the result of the air being free to expand into a larger volume.

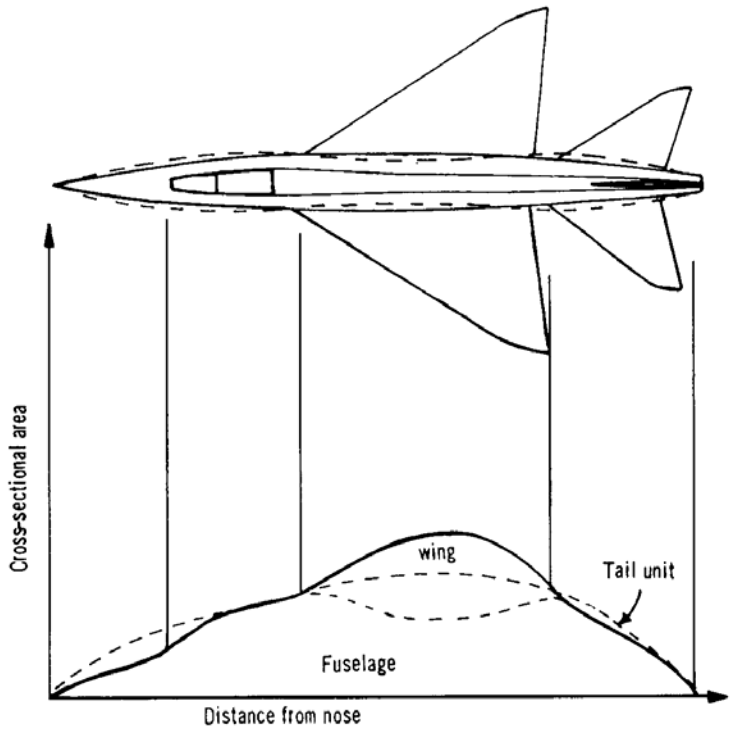

(a) Area distribution with modification (dotted) to reduce wing–fuselage interference.

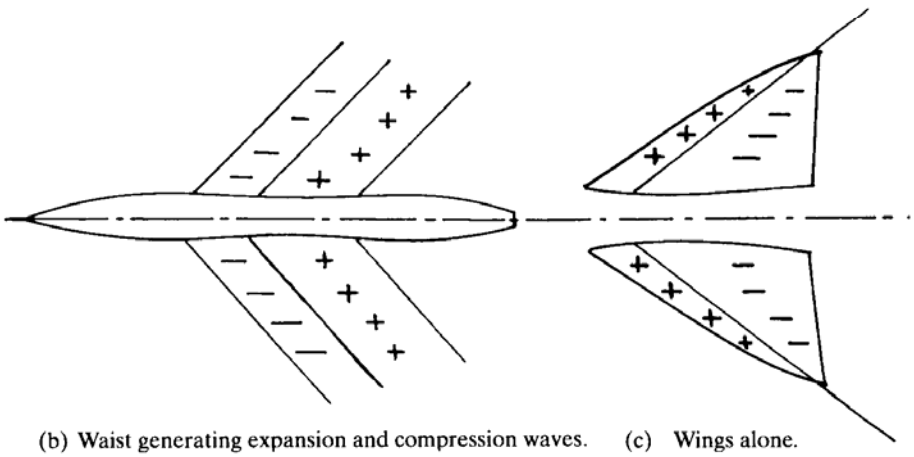

(b) Waist generating expansion and compression waves. (c) Wings alone.

Fig. 6.5 Area-ruling as a means of obtaining favorable wing-fuselage interference.

6.1.2 Design for supersonic flight

The design of a supersonic aeroplane is simplified by the flow being of one type only: by the time an aeroplane has reached M = 1.5 or 1.6 it is unlikely that any significant transonic region will remain anywhere on the surface of the airframe.

Design for minimum wave drag is of paramount importance. Wings are thin, around 3 or 5% thickness ratio; fuselages are long and slender and may feature camber to achieve more favorable lift/drag interference

with the lifting surfaces; wing spans are short, to reduce wave drag by confining the surfaces within the Mach cone (Fig. 6.6); and aspect ratios are low, so low in fact that the spanwise pressure distribution approximates to that around a pair of wing tips joined together in the middle.

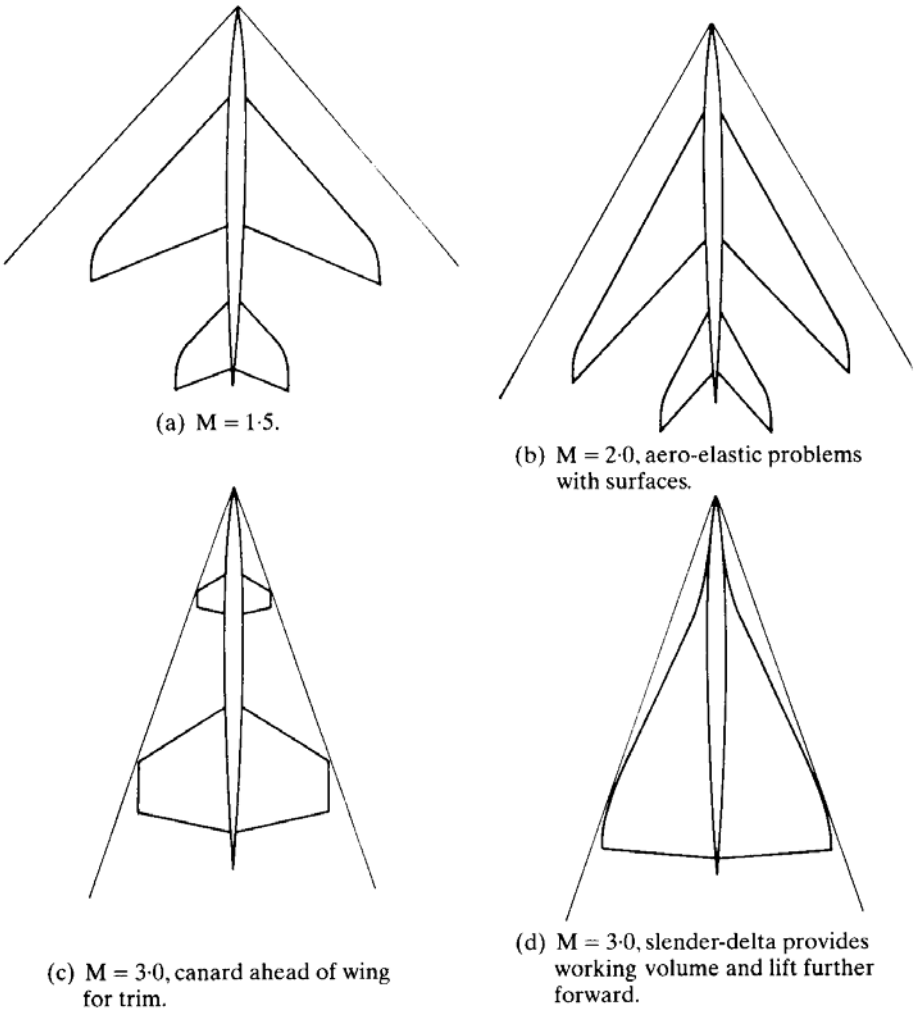

Fig. 6.6 Enforced slenderness and decreased aspect ratio for low wave-drag in the supersonic regime.

The proportions of the aeroplane are determined by the need to keep as much of the airframe as possible within the Mach cone shed from the nose (Fig. 6.6) which illustrates the reason for the appearance of the integrated slender-delta configuration as a more efficient alternative to the classical design for economic operations.

The slender-delta has more wing area than a 'straight-winged' classical aeroplane and, therefore, a lower wing loading. The additional area is needed to compensate for the lower lift coefficient. It follows that such an aeroplane should be able to achieve lower landing speeds without recourse to expensive and heavy high-lift devices, as long as low-speed instability can be overcome. It should be noted, however, that in Fig. 6.4 the straight (classical) wing has a lower drag coefficient than the swept wing at high Mach numbers. That is one reason why supersonic fighters and research aircraft have tended to classical rather than integrated layouts. When flying off-design the classical straight wing generates the highest drag in the region of mixed sub and supersonic flows. Of the two layouts the one using acute sweep is theoretically preferable.

Another significant feature of the supersonic classical configuration is that the wing and tail tips only affect the spanwise pressure distribution within a region bounded by Mach cones shed from the tip of each leading edge. At subsonic speeds it will be remembered that the tips influence the whole span. The inefficient portion of the wing or tail tip is therefore cropped away at the semi angle of the Mach cone, thus saving some weight. This feature tends to appear on missiles and aircraft intended for continuous flight at one design point, i.e. bomber, reconnaissance and supersonic transport aircraft. Cropped surfaces are shown in Fig. 6.7. It will be seen that the disturbance zone caused by the Mach cone shed from the kinked leading edge of the wing above is removed by the presence of a favorably shaped body.

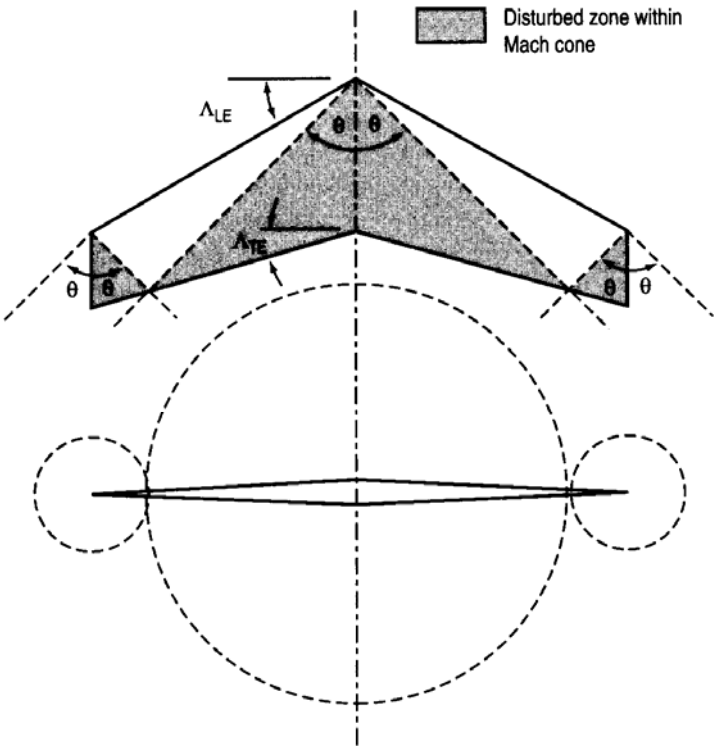

(a) Wing alone in supersonic flow showing disturbed zones within Mach cones shed from tips and wing junction leading edge.

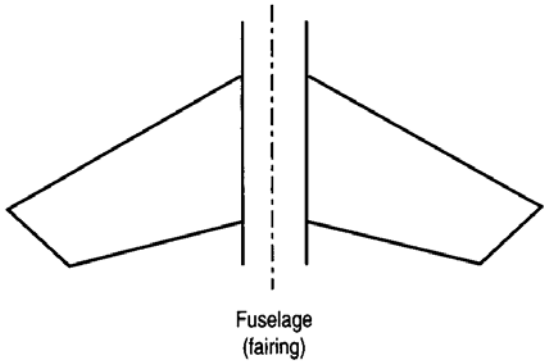

(b) Cropped wing, centre section disturbed zone eliminated by favourable body.

Fig. 6.7 Wing with inefficient portions of surface removed by cropping and fairing.

'Non-classical' aerodynamics and the slender-delta

It will be of some assistance to the student if the 'non-classical' concept of the aerodynamics of the slender-delta is explained, for such aerodynamics differ radically from the 'classical' aerodynamics discussed in Chapter 5. Such aerodynamics account for certain unusual features of the slender-delta planform, which is by no means simply triangular.

The essential feature of classical subsonic aerodynamics is the generation of an unseparated lifting vortex system around a wing, more or less normal to the direction of motion. Separated flow signifies a loss of circulation and lift while a sudden spread marks the stall. Around the wing tips air flowing outwards from the higher-pressure undersurface, upwards and then inwards over the upper surface marks the basic motion around the core of the separated airflow of the trailing vortex system. Removal of the trailing vortices by the substitution of endplates, or by an increase of aspect ratio towards infinity, reduces the lift-dependent vortex drag.

The slender-delta, being in effect two large wing tips joined at the centre-line makes use of the separated vortex flow shed from what are now the leading edges of the wings to generate large, non-linear lift increments, as shown in Fig. 6.8. The non-linear lift increments are accompanied, however, by the high price of large non-linear drag.

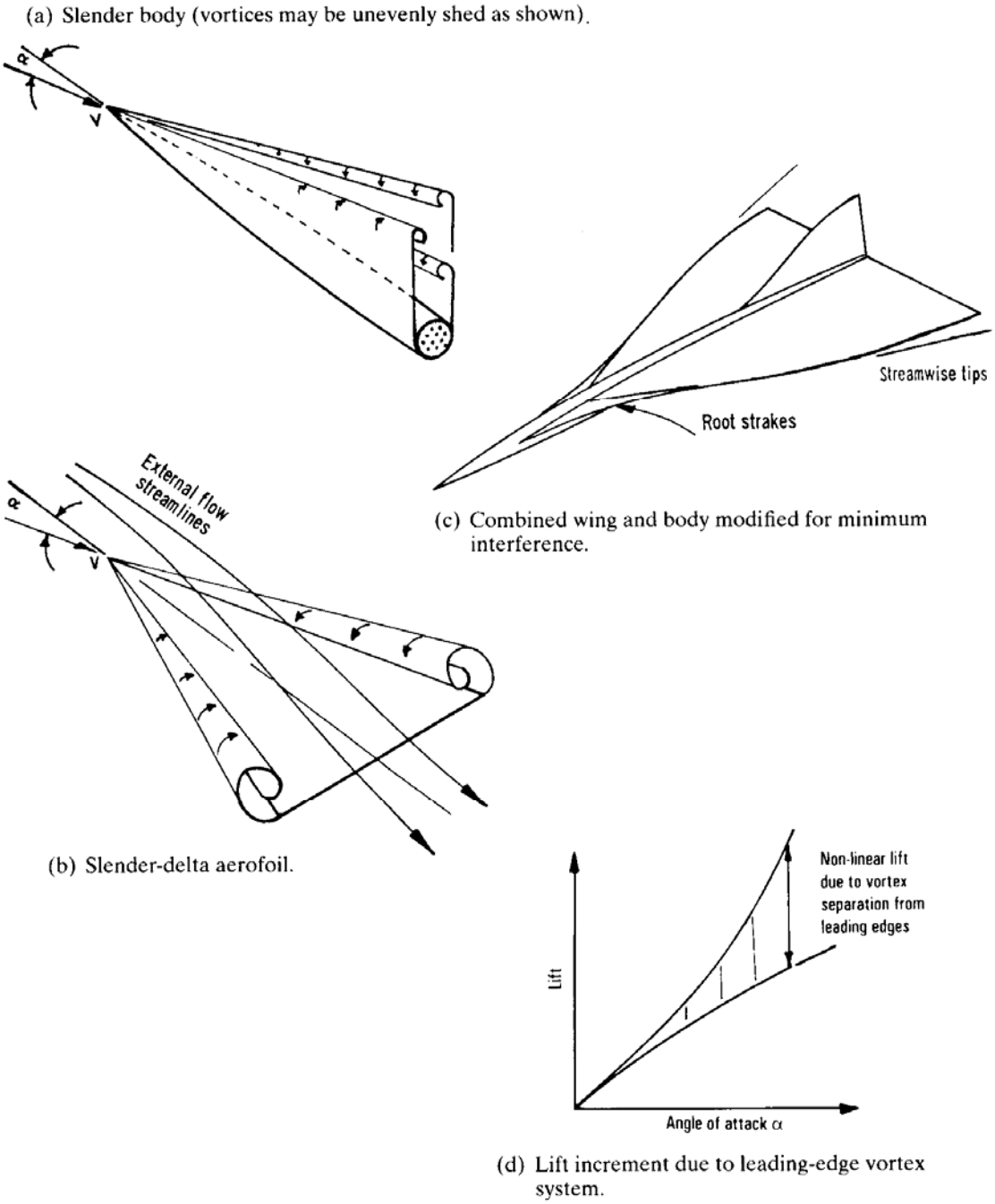

Fig. 6.8 Lifting vortices generated by a separated flow at low speed.

The leading edges of the slender aerofoil are sharp instead of rounded, the sharp edge forcing the relative airflow to separate by causing a large change of momentum and a correspondingly large pressure gradient across the leading edge. For the vortices to form, however, the component of flow normal to the leading edge must be subsonic. Looking again at Fig. 6.7 we see that if a Mach line (a line marking the intersection of a Mach cone with a plane) sweeps backwards more than the leading edge, then the leading edge of the wing experiences a supersonic component of flow. If the same argument is applied to the trailing edge, then part of the trailing edge lying outside (or forward of) a Mach line also lies in a region of supersonic flow. The leading and trailing edges are described as subsonic, sonic, or supersonic, depending whether their relevant angles of sweep (Λ_{LE}, Λ_{TE}) are more than, equal to, or less than (90 - θ), respectively. The wing in Fig. 6.7(b) has supersonic leading and trailing edges and the cropped tips are sonic. The wing in Fig. 6.8(c) is said to have subsonic leading edges and a supersonic trailing edge.

The sharp leading-edge strakes at the root of the wings are placed there to force even vortex shedding, because the body forward of the wing may shed vortices unevenly, as shown at large angles of attack. As the vortices have a powerful effect upon the lift, by delaying final separation of the flow from the rear part of the wing, any irregularity in their formation affects stability by causing pitching, rolling and yawing.

While the generation of such lifting vortices by separation at low speeds delays the stall in the classical sense, so that a wing may reach very large angles of attack (40^0 or more), the lift is accompanied by very high drag and low lift/drag ratios. Furthermore, although the wing may still be working at a large angle of attack, instability of various kinds makes it impossible for the lift to be used on take-off and landing.

Compression lift

Beyond M = 3 the shape of the aeroplane is dictated by the need to make use of grossly unfavorable features of the violently disturbed airflow. Shock waves are the predominant feature of the relative airflow and, as they cannot be avoided, they may be used to generate compression lift and (in theory) thrust-producing regions (when combined with surface-burning of fuel, i.e. fuel is burnt in the airstream over a rearward-facing surface and the resulting increase in local pressure produces thrust). The shapes of such aircraft are determined by the need to produce favorable interactions between the relatively high-pressure regions behind shock waves and the adjacent airframe surfaces. The simplest example is shown in Fig. 6.9, in which an ogive, shedding a complete ogival Mach-cone, is split longitudinally and fitted with wings. The semi-ogive sheds a semi-Mach-cone and the wings trap the pressure between the body and their sonic leading edges.

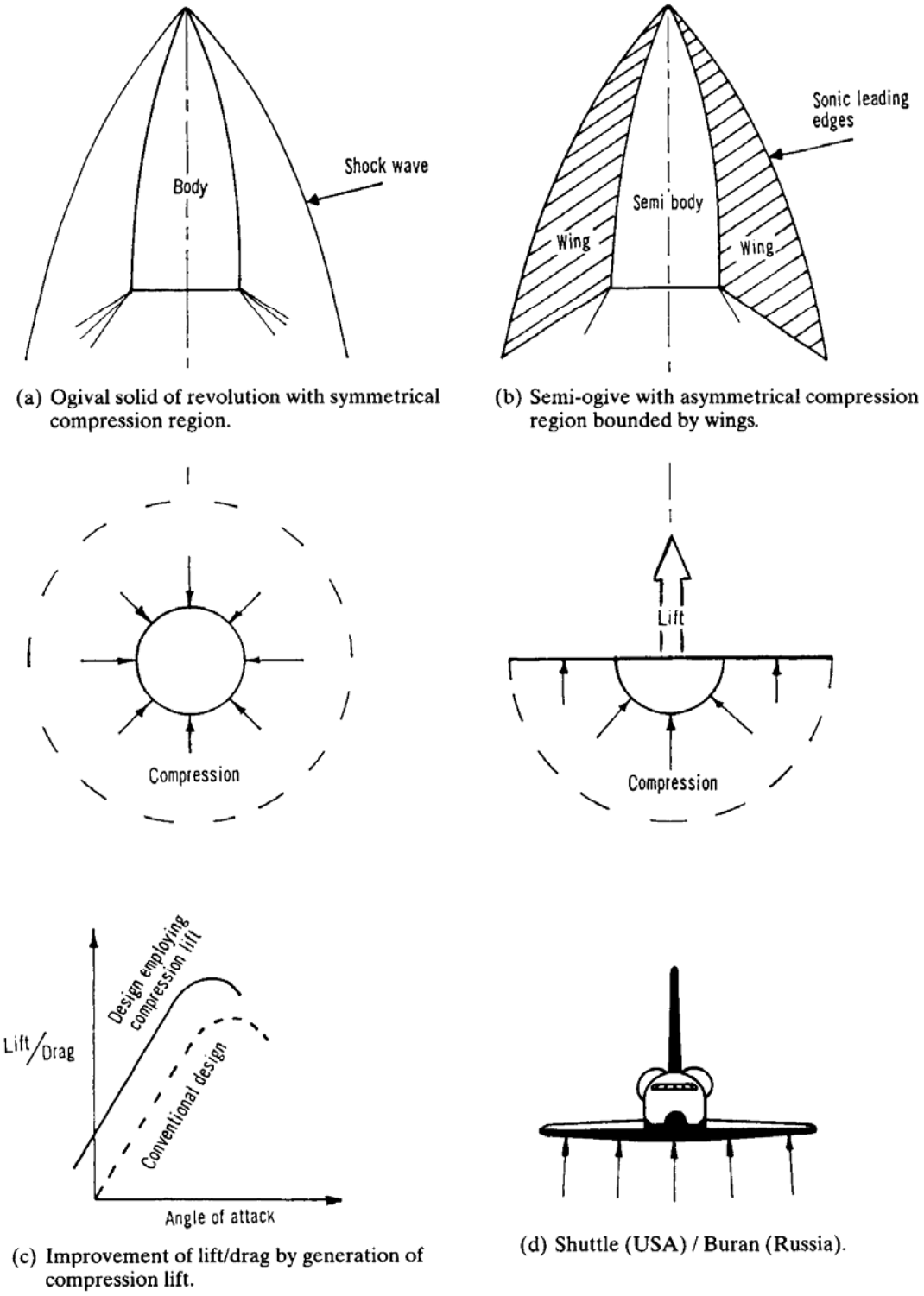

(a) Ogival solid of revolution with symmetrical compression region.

(b) Semi-ogive with asymmetrical compression region bounded by wings.

(c) Improvement of lift/drag by generation of compression lift.

(d) Shuttle (USA) / Buran (Russia).

Fig. 6.9 The generation of compression lift at high Mach numbers. Note that the semi-ogive in (b) has not found favor in practice. The differently configured Shuttle in the USA and the Russian Buran fly with their bodies mounted above their wings. They are shaped to lift throughout the aerodynamic flight envelope, while absorbing thermal shock of rapid kinetic rise in temperature at a large angle of attack on re-entry (see

Fig. 6.8).

The American B-70, which first flew in May 1964, was designed to generate compression lift. Figure 6.9(c) shows a typical curve of compression lift/drag compared with the lift/drag of a conventional design. The salient features of the B-70 are shown in Fig. 6.10. The engine-box beneath the delta wing performs a similar function in compressing the airflow to the semi-ogive shown in Fig. 6.9(b).

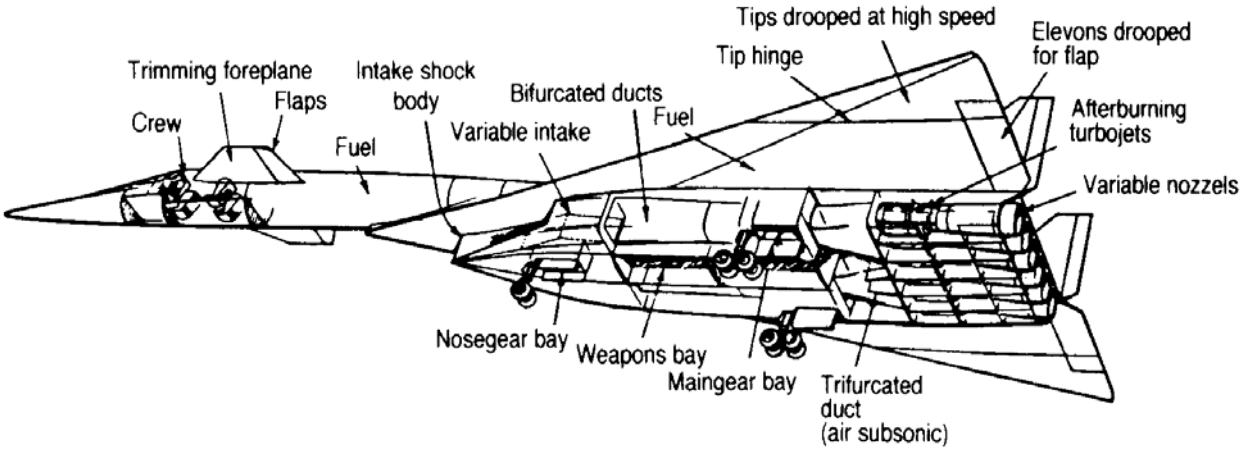

Fig. 6.10 The North American B-70 showing salient features that are typical of current aeronautical practice. Compare the shape of the engine-box and wing combination with Fig. 6.9.

6.2 Variable geometry - changing the effective airflow in flight

Variable geometry is, in various ways, the means of changing the effective configuration of the lifting surfaces in flight, so that the aerodynamic efficiency of the aeroplane is improved in extreme off-design conditions. Variable geometry appears in two forms: polymorphism, in which the planform and, hence, the aspect ratio of a wing is altered; and variable camber, in which, for example, flaps are lowered to increase lift at low speeds. Certain aircraft, notably those for naval operations, may feature variable incidence wings - a way of altering the angle of attack without altering the fuselage attitude to the flight path.

6.2.1 The polymorph

A truly polymorphous wing configuration has already been shown in Fig. 2.4, but polymorphism can take many forms, as shown in Fig. 6.11.

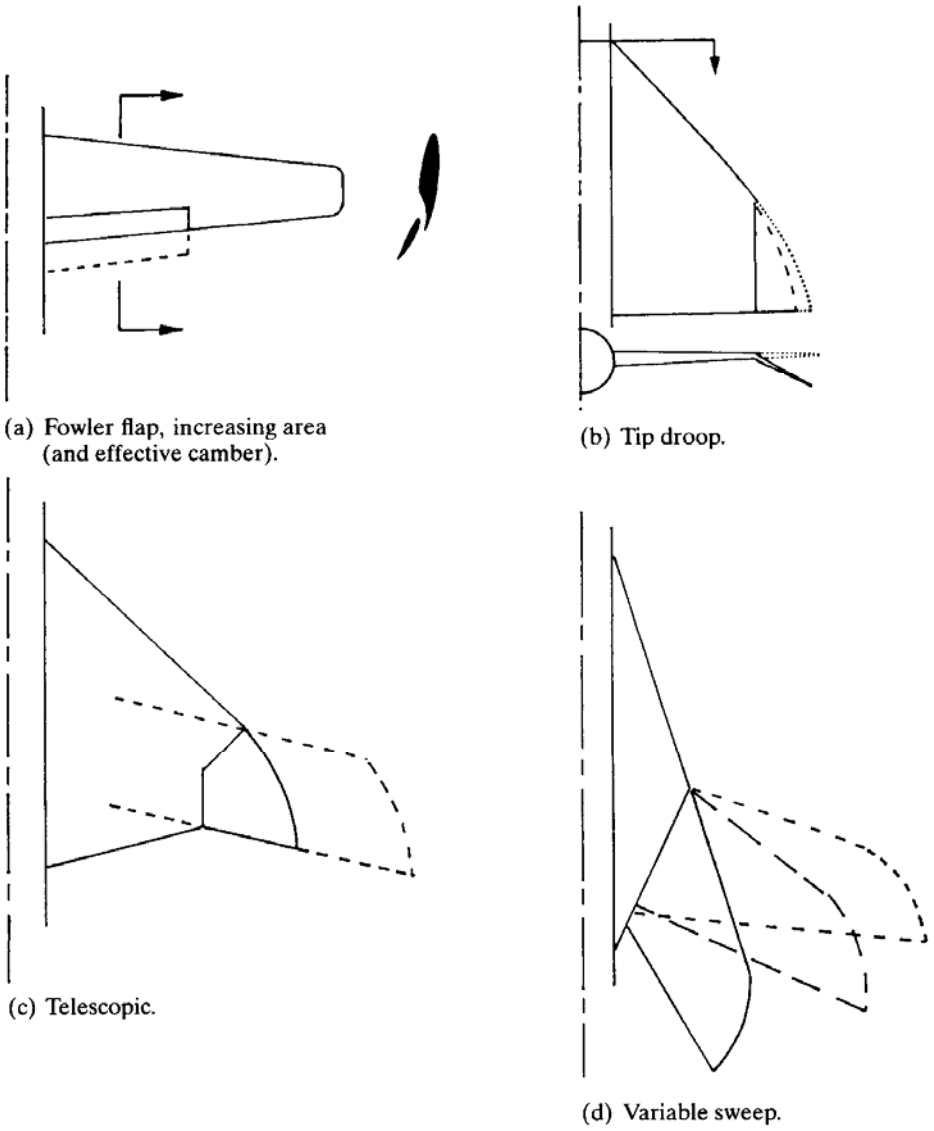

Fig. 6.11 Polymorphous variable geometry.

The Fowler flap, which increases the area of the wing (as well as the camber) increases the lift and reduces the landing speed. Tip droop, used on the B-70, moves the aerodynamic centre forward at high speeds and decreases the nose-down pitching moment and trim drag: it also increases the effective fin-area and increases the compression lift. Both a telescopic and a variable sweep wing reduce the wave drag at high speed and achieve high lift/drag ratios at low EAS. The improved cruising efficiency resulting from variable sweep is shown in Fig. 6.12.

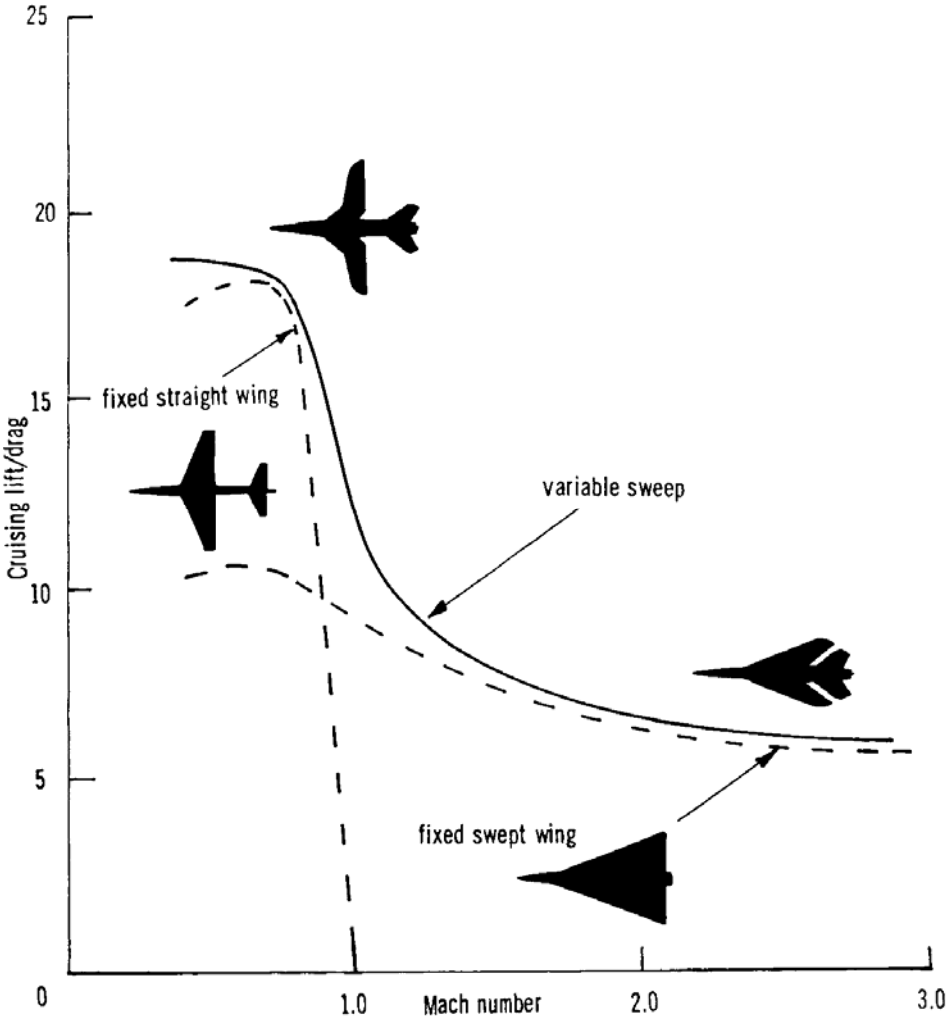

Fig. 6.12 Variable sweep as a means of improving theoretical cruising lift/drag and, therefore, reducing the fuel required for range.

Table 6-1 has been included to show the typical benefits that might be obtained from the use of variable sweep for a specific, though hypothetical, bomber like the fighter in Fig. 5.1.

Table 6-1 Cruise benefit of variable sweep
Range: 1600nm at range speed and height
200nm at M = 0.9 at sea level
Endurance: loiter for 4 hours supersonic dash to M = 2 for 5min
Payload: 7500 lb

Item	Percentage all-up weight	
	Fixed-sweep	Variable sweep
Structure	30·2	33·2
Powerplant	13·8	12·2
Services (hydraulic, etc.)	7·4	8·0
Fuel	37·9	28·5
Payload	8·9	16·5
Total	100	100
Take-off (all-up weight) $\frac{7500 \times 100}{\text{payload (\% weight)}}$	$\frac{7500 \times 100}{8{\cdot}9} = 84000$ lb	$\frac{7500 \times 100}{16{\cdot}5} = 45500$ lb

The variable sweep wing is heavier than a fixed wing, because of the weight of moving parts and locally increased strength of members. The reduced drag, however, enables a less powerful and lighter engine to be used. Less fuel is therefore needed, because the engine is less thirsty, and the fuel system can be made lighter. The payload is constant, but this appears as a different percentage of the all-up weight of each aeroplane.

It can be seen from Table 6-1 that of the two designs the aeroplane with the variable sweep wing will be the lighter and, hence, the cheaper of the two. However, broadly speaking, variable sweep offers its main

advantages over fixed sweep when the required performance involves the need to fly efficiently over a large part of the flight envelope, for example when combining supersonic dash with STOL and subsonic loiter.

6.2.2 Devices which change the effective camber of sections

We saw earlier that the camber of an aerofoil section alters the curvature over the upper and lower surfaces and, therefore, the displacement of the air being affected by each. Positive camber increases the curvature of the upper surface and decreases that of the lower, so that there is a net increase in the lifting circulation imparted to the air. It follows that the greater the positive camber, the greater the nose-down pitching moment and vice versa.

Thinking in general terms of altering the curvature of a lifting surface to alter the circulation leads to a collection of devices for controlling lift and drag at low speed, such as those shown in Fig. 6.13. The control of section lift and drag involves control of the boundary layer.

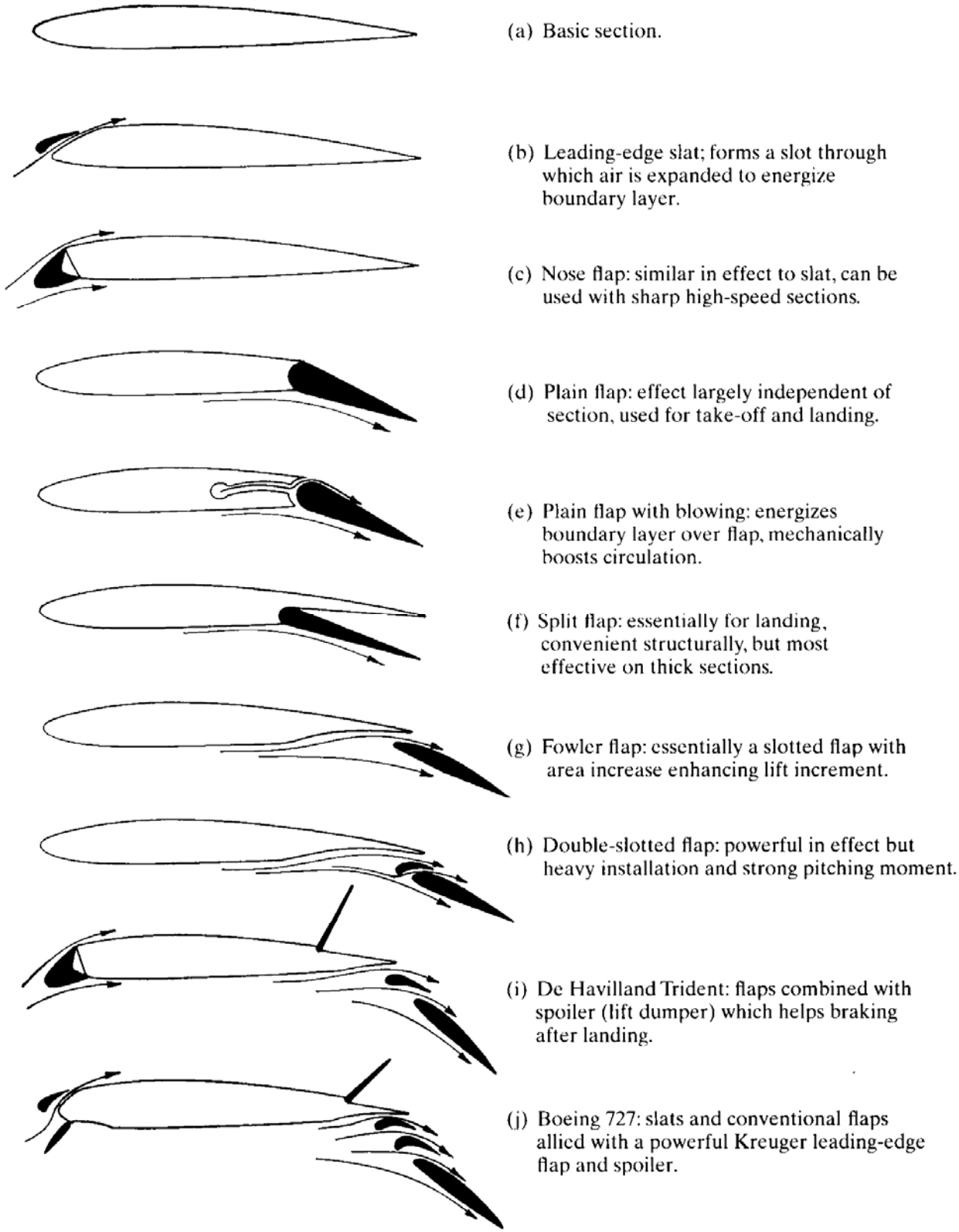

Fig. 6.13 (a)-(j) Camber (and area) changing devices for controlling section lift and drag at low speed.

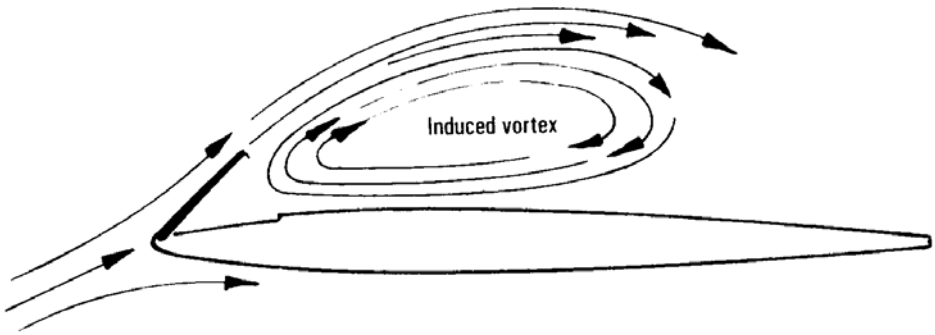

(k) Vortex-flap for agility in manoeuvre.

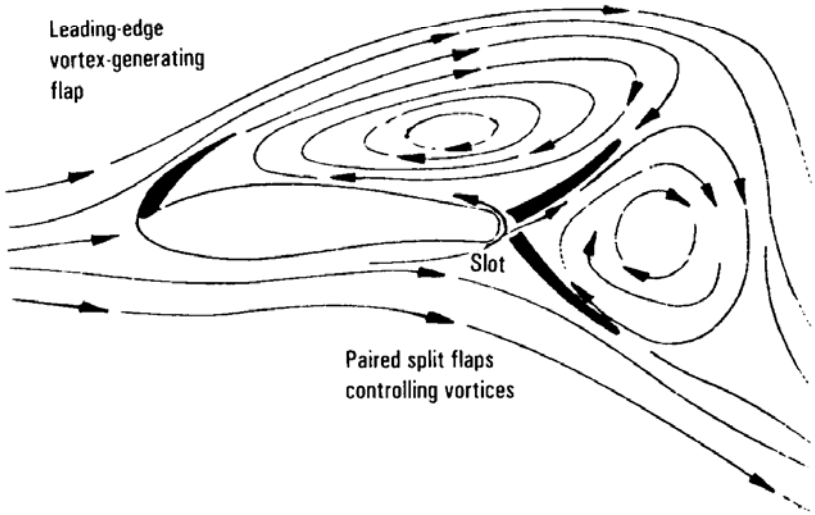

Fig. 6.13 (k) and (l) The leading-edge vortex-flap (k) which appears to be a close relative of the Kasper wing flap system (l) (published circa 1973 by Witold Kasper, a retired Boeing aeronautical engineer) for generating lift by means of large-scale separated vortices. The leading-edge vortex-flap increases agility at large angles of attack. It is a feature of the Boeing proposal for the Joint Strike Fighter (JSF) program.

Shaping aerofoils by variations of camber, thickness distribution, slots, slats and flaps and, as we shall see, vortex-generators, are all ways of inducing the boundary layer to develop and behave in a controlled manner. The term boundary layer control is reserved in practice for mechanical control of the boundary layer by the application of power.

We have seen that for efficiency aerodynamic surfaces must not gather up air any more than is necessary. Intense suction and steep pressure gradients behind suction peaks indicate that the air is being gathered more swiftly than it should be. Slots of various kinds, both fixed and variable, are ways of slackening the pressure gradient. The slot with air blowing from it can be regarded as a means of 'washing away' the air being borne along and tending to cling to the airframe, by the introduction of a sheet of relatively high velocity air tangential to the surface. The slot prolongs the lift curve by increasing the angle of attack at which the stall occurs. A leading-edge flap reduces the suction peak just behind the leading edge, produces a thinner boundary layer and increases the stalling angle in a similar way.

The choice between a slat and a flap at the leading edge is usually based upon mechanical and structural convenience rather than aerodynamic merit. Thin high-speed sections with sharp leading edges derive more benefit from nose flaps.

The plain flap is the basis of all conventional control surfaces. When moved downwards lift is increased; when moved upwards lift is decreased, i.e. it is increased in the opposite direction. The advantage of the trailing-edge flap over leading-edge slats or flaps is that the attitude of the aeroplane on the glidepath is more nose-down, with improved vision for the pilot.

6.2.3 Mechanical control of the boundary layer

There are 3 basic ways of controlling the development of the boundary layer and, hence, the lift and drag of a lifting surface by the use of external power:

(a) Boundary layer control proper, in which power is applied to control separation and the stall of the basic

surface, while achieving lower drag at higher speeds.

(k) Vortex-flap for agility in maneuver.

(b) Circulation control using blowing or suction over flaps and near the trailing edge to increase the circulation and lift at a given angle of attack.

(c) Directed slipstream from jet or propeller efflux over flap and aerofoil surfaces.

Boundary layer control by the use of suction over a large part of an aerofoil surface has been experimented with for many years as a way of achieving laminar flow, notably by Arado in Germany, Handley Page in the UK and Northrop in the USA. Results suggest that wing zero-lift drag maybe reduced to 1/5th normal values. A Northrop X-21A is claimed to have flown with suction for 4 hours on fuel enough for something like 2.5 hours in the unsucked condition.

Circulation control using blowing to generate supercirculation is most conveniently achieved by the tapping of air from engine compressors of many high-performance jet aeroplanes. This was done with the naval Blackburn Buccaneer shown in Fig. 6.14, which employed blown flaps, ailerons and tailplane.

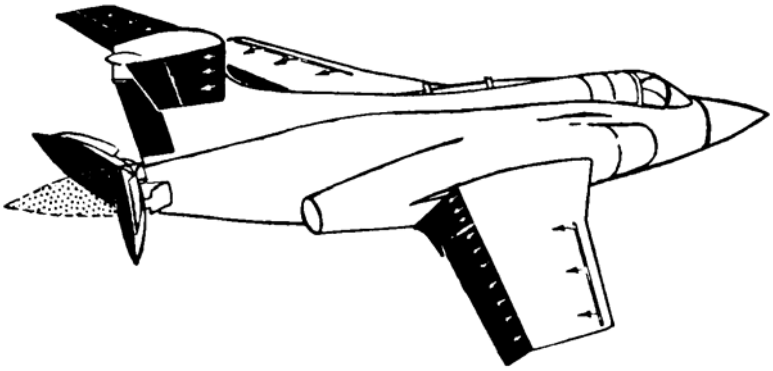

Fig. 6.14 The Blackburn Buccaneer which employed blowing front and rear on the wings and from the leading edge of the tailplane.

The use of supercirculation enables smaller lifting surfaces to be used, with a saving in weight that compensates for the increased weight of the power system. The reduction in lifting surface area achieved in a specific case is shown in Fig. 6.15, where an early Blackburn design study leading to the Buccaneer is compared with a later Buccaneer.

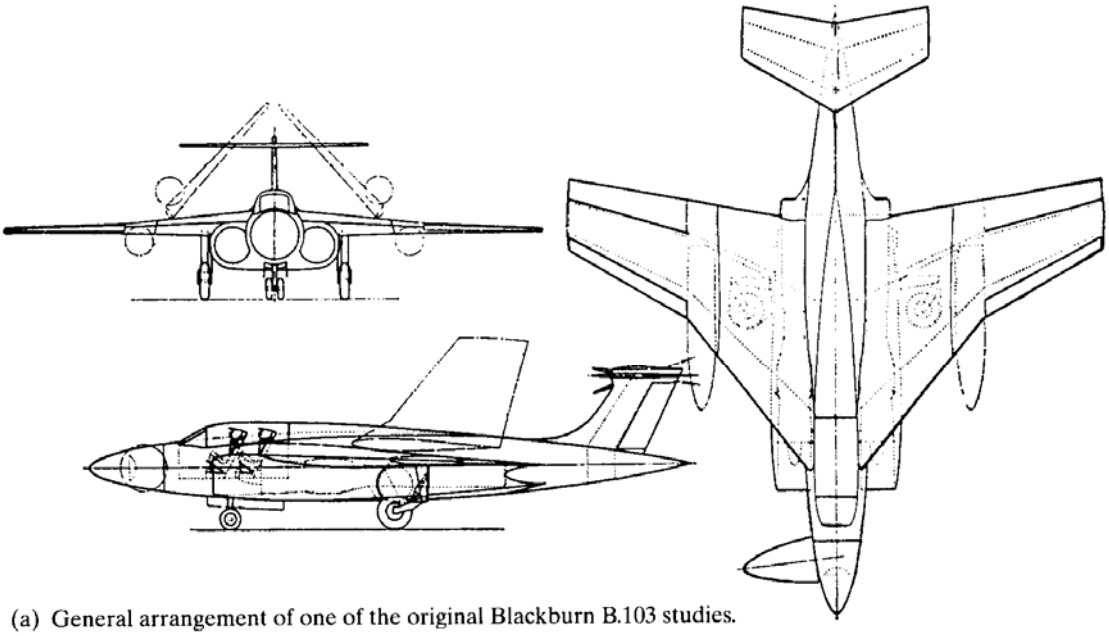

(a) General arrangement of one of the original Blackburn B.103 studies.

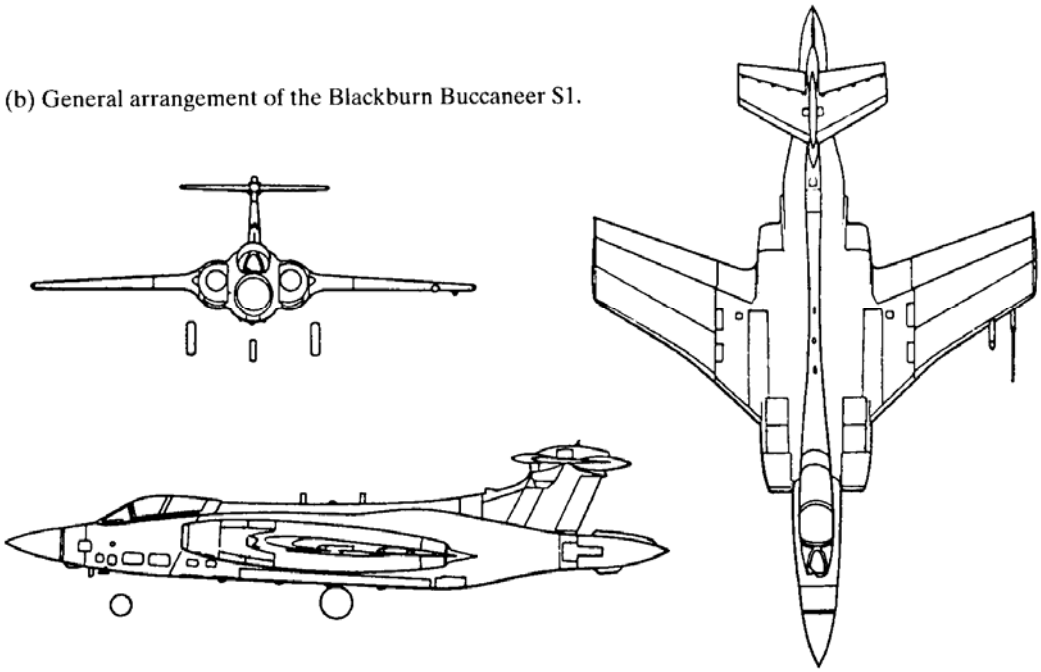

(b) General arrangement of the Blackburn Buccaneer S1.

Fig. 6.15 A now historic, effective example of the way in which circulation control affects the areas of lifting surfaces needed to meet a requirement. Note how circulation control enabled the size of the naval Blackburn B.103 wing and tailplane surfaces to be reduced, which saved weight while making it easier to stow on an aircraft carrier. Note too the area-ruled bulging of the rear fuselage, to reduce the supercritical drag rise around M = 1.0 at low cruising altitude (compare Fig. 6.5(a)).

Generalized lift improvements from flaps, slats and mechanical control of the boundary layer are shown in Fig. 6.16. A blown boundary layer is thicker but more easily maintained than one depending upon suction.

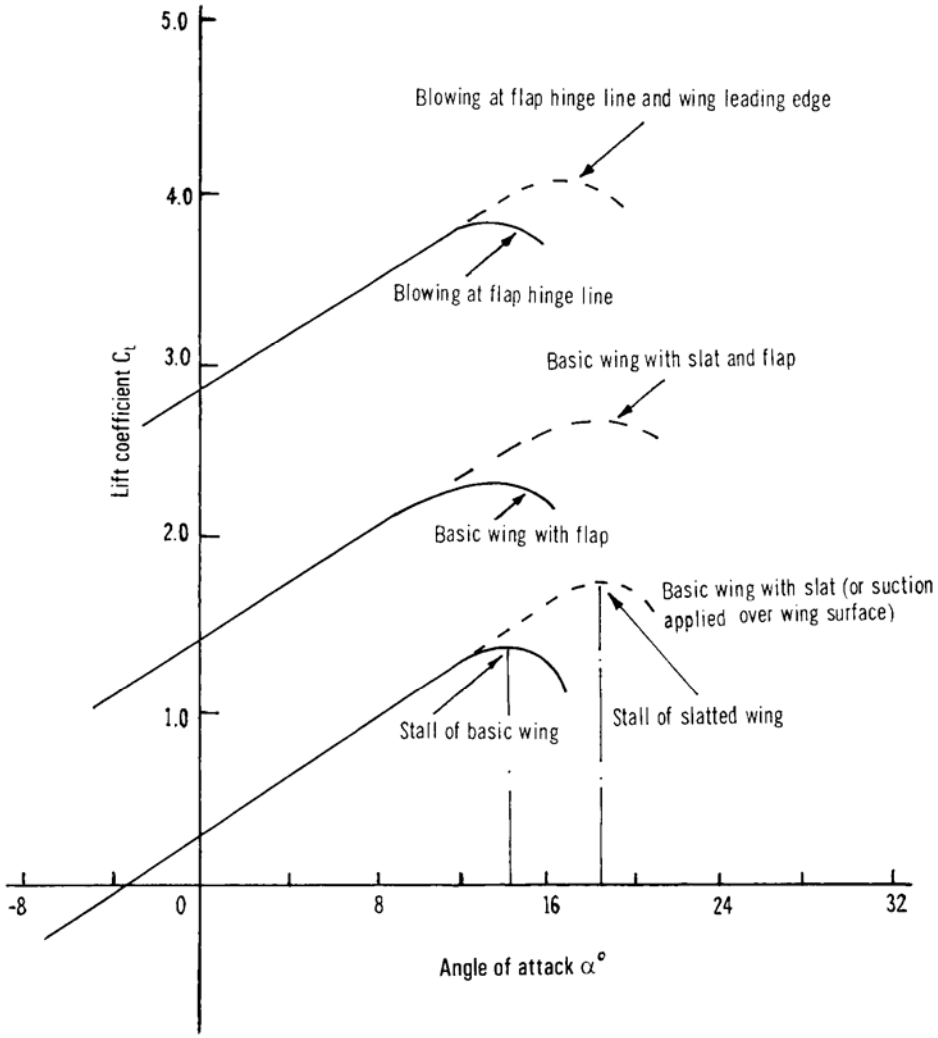

Fig. 6.16 Generalized effect of flap. slat, suction and blowing upon lift of basic wing.

6.2.4 Air brakes and drag chutes

Drag is controlled crudely but effectively by the use of air brakes and spoilers. Air brakes are often used at low speed, as well as for deceleration from high speed, to increase the zero lift drag on the approach; by so doing the overall drag is increased, but the speed for minimum drag is decreased (Fig. 6.22(a)). In this way the delta aeroplane, for example, can maintain speed stability at lower approach speeds.

Speed stability is not an entirely satisfactory term to use, but there is no better alternative for describing what should happen when the attitude (and hence speed) changes transiently at constant power. Beyond the minimum drag speed a decrease of speed is accompanied by a decrease in drag and vice versa. At constant power a decrease of speed is automatically compensated by an acceleration, because thrust is then greater than drag, while a transient increase of speed results in a deceleration, without intercession by the pilot. Below the minimum drag speed one is operating on the 'backside of the power curve', and a decrease of speed is accompanied by increasing drag and further decreasing speed. On the backside of the power curve there is no speed stability.

Many modern aeroplanes use drag chutes to decrease landing runs and to augment the effectiveness of the wheel brakes. Drag chutes are sometimes used as anti-spin parachutes to augment the power of the control surfaces and prevent Autorotation.

(picture)
Plate 6-1 (a) Sukhoi Su-27 showing large and powerful dorsal-mounted air brake and lift-dumper, open on landing (see also Appendix E). (b) Lockheed F-117 with drag-chute deployed on landing (see also Appendix E).

6.3 Fixed modification to improve local airflows

No matter how carefully the basic shape of an aeroplane may be combined with variable geometry to maintain high aerodynamic efficiency, there are inevitable local regions of interference that cause the airflow to break down under certain conditions. Sometimes the effects are small enough to be ignored, or lived with, at other times the effects may be of critical importance. For our purposes we shall divide the fixed modifications to the

geometry of the aeroplane into: palliatives, in the main designed to improve airflow over the lifting surfaces; and the design of wing-body junctions. Palliatives, such as vortex generators, may be found extensively around fuselages as well as wings and tails, so one should not think of them as being exclusive to the lifting surfaces.

6.3.1 Some aerodynamic palliatives

Swept wings are particularly prone to misbehavior of the relative airflow, because of the third component of motion, V sin Λ (Fig. 6.3(b)) towards the tips. When shock waves also form, severe loss of stability may result from an apparently small disturbance spreading rapidly along a wing. The spanwise component of motion causes a drift of the boundary layer towards the tips with thickening of the layer and proneness to separation. The various palliatives are designed to delay separation, or to at least make separation predictable. Some use a forced vortex to break down an adverse pressure gradient, others employ camber for the same purpose. The vortex generators, fence and notched leading edge all induce a chordwise vortex over part of the wing, the flow around the vortex inhibiting the spanwise drift of the boundary layer.

(picture)
Plate 6-2 Pilatus PC-12, single-turboprop business/commuter/air-ambulance, showing several vortex-generating 'fixes' to control lift and drag. The winglets diffuse the strength of the tip vortices to an extent, while improving roll with yaw and sideslip (dihedral-effect). The anhedralled pair of ventral strakes beneath the rear fuselage, like the long dorsal fin-strake, generate favorable lifting (side force) vortices in pitch and yaw, whenever components of airflow cross them. In this way they increase the authority of the fin and rudder surfaces working in the wake.

The cambered and dog-toothed leading edges reduce the peak pressure and proneness to separation of the flow from the wing behind. Conic-camber, in which the camber is formed by part of the surface of a cone, has been used to modify some high-speed wings for better operation off-design. The notched leading edge is particularly useful on highly swept wings which shed large leading-edge vortices at high angles of attack, for the notch stabilizes the spanwise position of the shed vortex. By preventing the vortex wandering aimlessly up and down the leading edge, stability and lateral control can be kept within acceptable limits. Vortex-generators are in effect small aerofoils which, in protruding through the boundary layer, generate relatively powerful vortices from their tips. The flow around each tip vortex draws air from beyond the boundary layer and, by mixing close to the wing surface, increases the relative airflow within the boundary layer. In this way the adverse pressure gradient is reduced and the stagnating boundary layer is washed away into the wake.

Each palliative increases the drag over the theoretical minimum that might ideally be achieved with the basic shape of the aeroplane, but the increment of drag is less than the drag rise caused in practice without them. Examples, which belong predominantly to the leading edges, are shown in Fig. 6.17, along with a thin section having a slab trailing edge (j). It will be seen that the slab trailing edge decreases the slope of the aerofoil surfaces behind the point of maximum thickness, thus decreasing the adverse pressure gradients. If the surfaces were continued rearwards to meet beyond the trailing edge the resultant section would be much finer aerodynamically than the section used. Apart from local turbulence behind the slab, the air is unable to detect that no surface remains beyond the trailing edge.

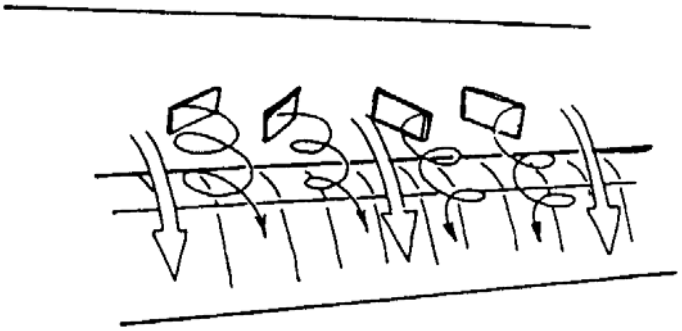

(a) Vortex-generators shed miniature vortices which draw energetic air into a clinging and 'stagnating' boundary layer, helping to control it, while ridding the airframe of its adverse effects. Usually their drag penalties are less than their aerodynamic benefits.

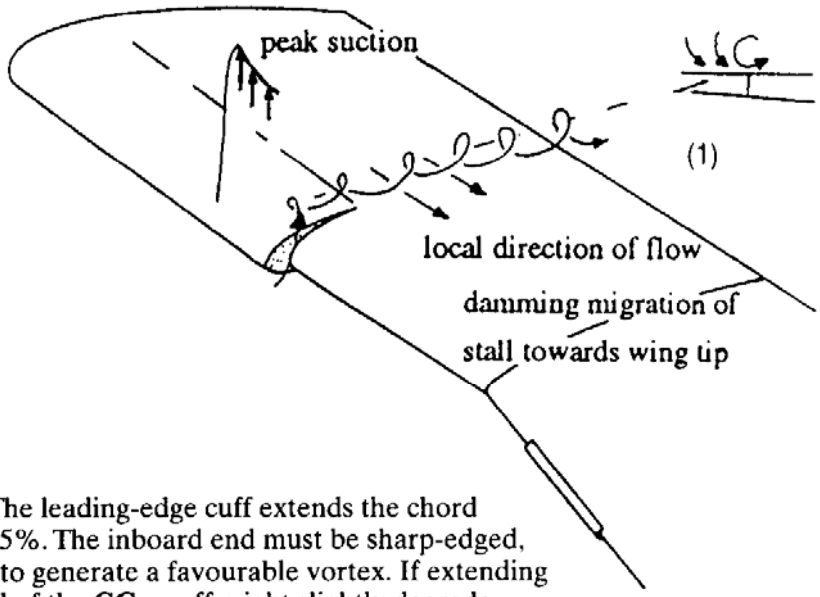

(b) The leading-edge cuff extends the chord by 3–5%. The inboard end must be sharp-edged, so as to generate a favourable vortex. If extending ahead of the **CG** a cuff might slightly degrade longitudinal stability.

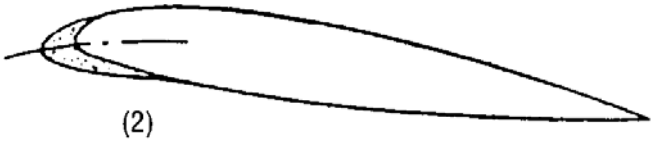

. . . The cuff is cambered and has some properties of an extended leading-edge flap.

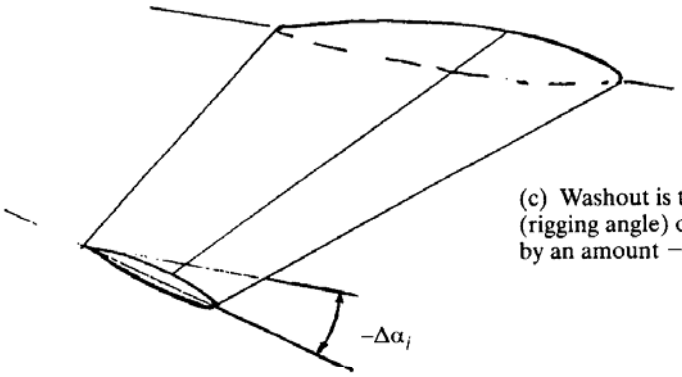

(c) Washout is the reduction of wing incidence (rigging angle) outboard, relative to the root, by an amount $-\Delta\alpha_i$

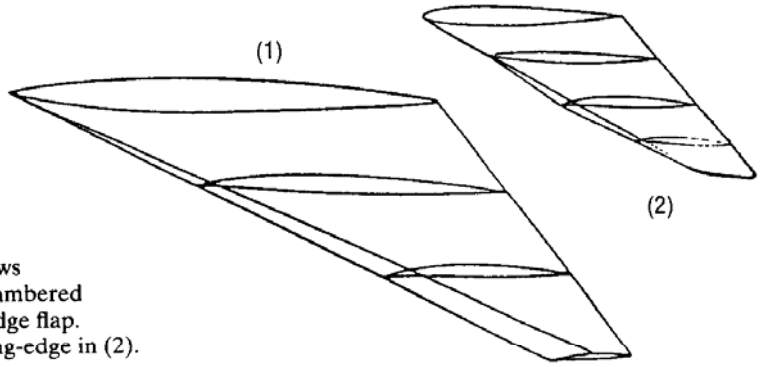

(d) Conic camber (1) is the introduction of both geometric droop and washout which bestows some of the advantages of the cambered cuff and the extended leading-edge flap. A relative is the extended leading-edge in (2).

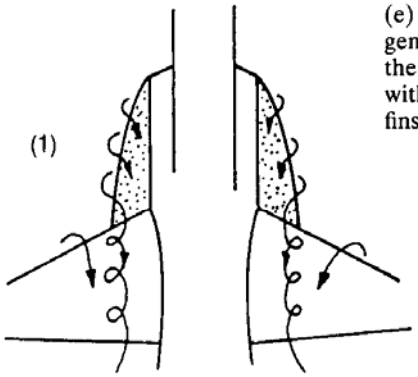

(e) The leading-edge extension, LEX, generates additional vortex lift, enabling the wing to reach larger angles of attack without stalling (1). It is a relative of fins and fuselage strakes...

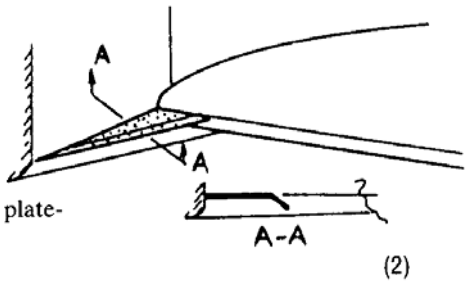

...as is the small, triangular, plate-strake at the root.

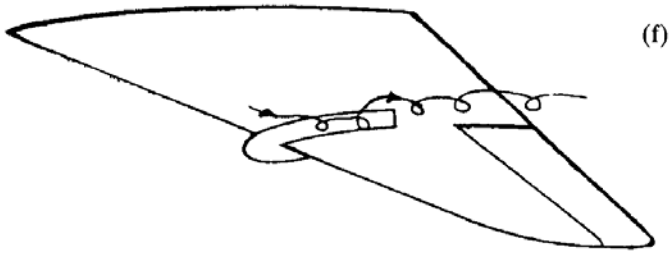

(f) The boundary-layer fence.

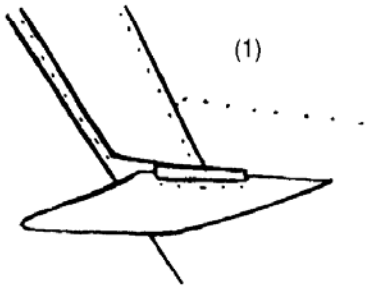

(g) Leading-edge vortilons work like the inboard end of the cuff, and as vortex-generators mounted beneath the wing leading-edge (1)...

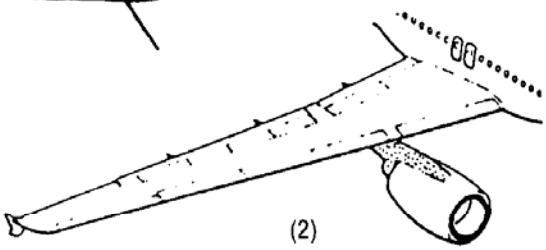

...pylons of wing-mounted podded engines are often shaped as vortilons, thus serving a multiple purpose (2).

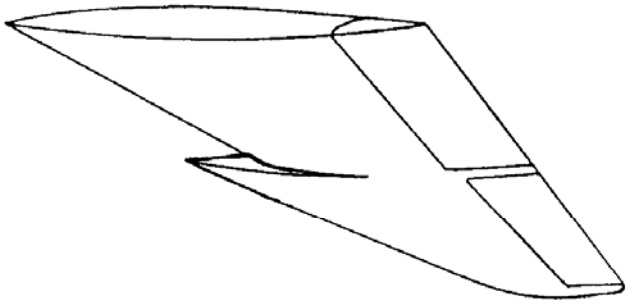

(h) The dog-tooth combines the aerodynamic properties of conic camber and vortex generation by the root of the LE cuff.

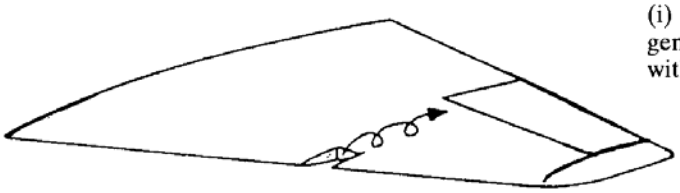

(i) The notched leading edge generates a favourable vortex without adding wetted area.

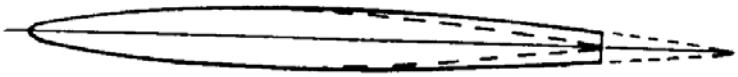

(j) Slab trailing edge.

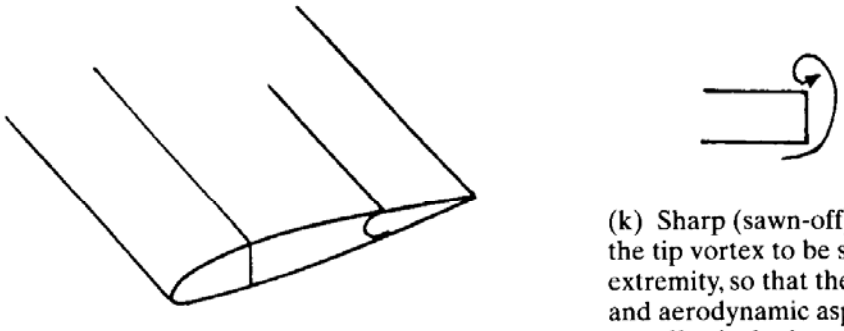

(k) Sharp (sawn-off) tips (1) cause the tip vortex to be shed at the extremity, so that the geometric and aerodynamic aspect ratios are effectively the same.

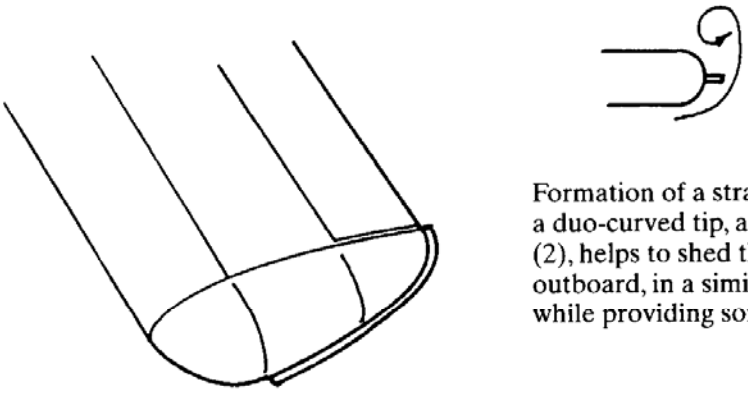

Formation of a strake around a duo-curved tip, aft of the extremity (2), helps to shed the trailing vortex outboard, in a similar way to (j), while providing some artistic scope.

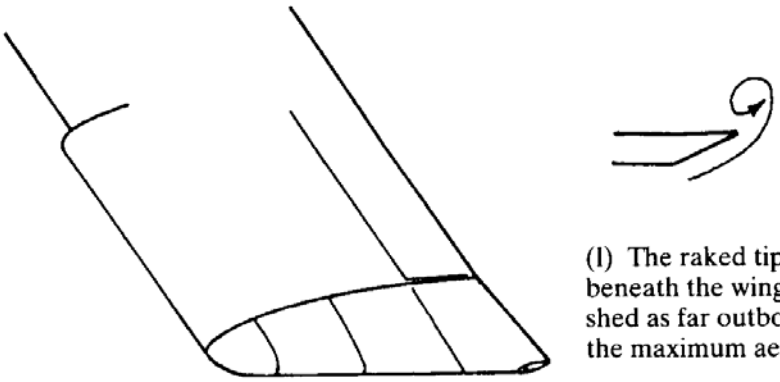

(l) The raked tip traps the streamlines beneath the wing, causing them to be shed as far outboard as possible, with the maximum aerodynamic aspect ratio.

Fig. 6.17 (a)-(l) A selection of palliatives or 'fixes' for generating and stabilizing favorable airflows. These are used to suppress separation, including control of the start and development of the stall. Although used mainly on wings, they are also applied to tail surfaces. While causing an increase in incremental drag, they are often used to diffuse more gross 'lumps' of turbulent air, rich in draggy vortices, shed from other parts of the airframe.

6.3.2 Junctions: curing interference

The design of an aeroplane involves detailed treatment of the aerodynamic (and structural) properties of the individual parts, in temporary isolation from the rest. Design data sheets enable broad approximations to be made of the lift, drag and pitching moments of items such as main planes, tail surfaces and bodies of various kinds. However, the sum total of the individual drags is usually much less than that of the whole, while lift too is usually less. Pitching moments may be unpredictably increased or decreased. The cause lies in the

interference between adjacent aerodynamic surfaces; the airflows around wing and body junctions usually interacting in such a way so as to spoil the simple clean flows experienced in isolation.

The effects of such interference are manifold, the commonest being airframe buffeting, premature stalling of one wing before the other, poor acceleration and reduced airspeeds. Interference effects all arise from decreased velocities in local relative airflows, which cause adverse pressure gradients and premature separation of the boundary layer.

Subsonic airflows

At subsonic speeds any increase in the cross-sectional area of a flow results in decreased velocity and increased static pressure. When a wing-body junction is right-angled there is no marked interference. However, if a high or low wing is mated with a curved body cross-section, then the cross-sectional area available to the relative airflow increases towards the leading and trailing edges of the wings as the angle between body and wing surface becomes increasingly acute. Fillets must then be fitted where surfaces meet at acute angles to maintain smooth airflows.

The relative airflow along the side of a body is usually less than that over the crest of an aerofoil surface, because body curvature is less. There is, therefore, a decrease in the airflow velocity over a wing at the root and a loss of lift. Fillets reduce the amount of lift lost by reducing velocity gradients between wing and body (Fig. 6.18).

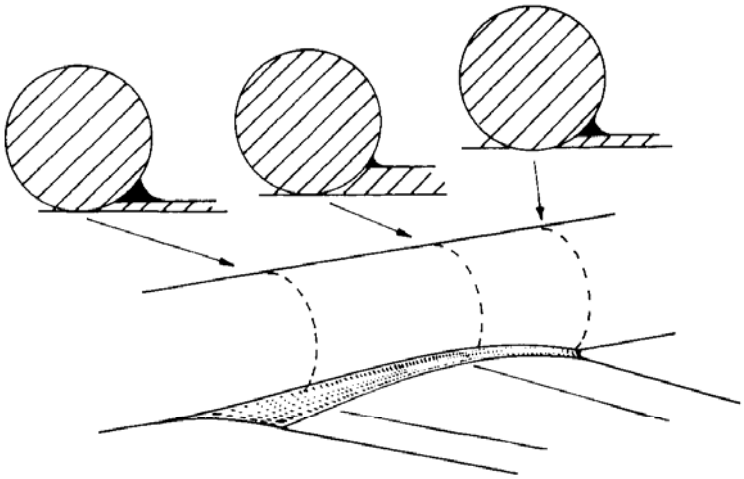

(a) Typical fillet at a low wing–body junction.

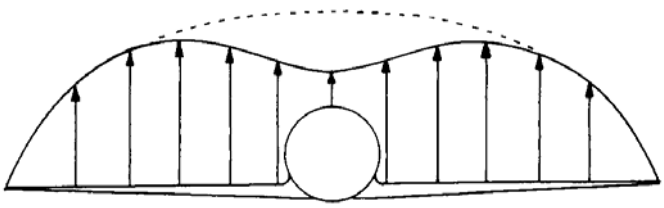

(b) Loss of lift due to presence of a body.

Fig. 6.18 The subsonic wing-body junction

Sonic and supersonic airflows

In sonic and supersonic airflows it is necessary to control shock formation as far as possible, because the sharp adverse pressure gradient through a shock wave causes boundary layer separation. A shock forming in the vicinity of the crest of an aerofoil surface can cause complete disruption of the lifting pressure distribution behind it. The buffeting and sharp loss of lift (shockstall) caused by compressibility gave rise to the early misconception of a 'sound barrier', beyond which man might not fly.

We have already seen that the most important component of the relative airflow over a surface is that normal to the local isobars. When two swept aerofoil surfaces are joined in isolation from a body, the airflow over each wing affects the other, giving rise to centre-line effects of a reduction in isobar sweep. Effects similar to those occurring at a centre-line are caused at a junction where an aerofoil is cranked in planform, i.e. where there is a change of sweep. For example, the M-wing was suggested some years ago as a possible transonic-cruise planform that avoided aero-isoclinic distortion (the nose-down twisting of a swept wing towards the tip, caused by bending due to lift) and centre-line effects would therefore have been present at 3 places across the span: at the 2 cranks and at the centre-line. The addition of a properly shaped body straightens the isobars at the root, or junction.

A delta wing and part of an M-wing are shown in Fig. 6.19. The initial curvature of the isobars across the span is shown to be altered by the addition of a fuselage and, in the case of the M-wing, by the addition of engine nacelles at the crank of each wing. The bodies are indented in accordance with area-rule theory. Streamwise tips have been added to straighten the isobars at the wing tips.

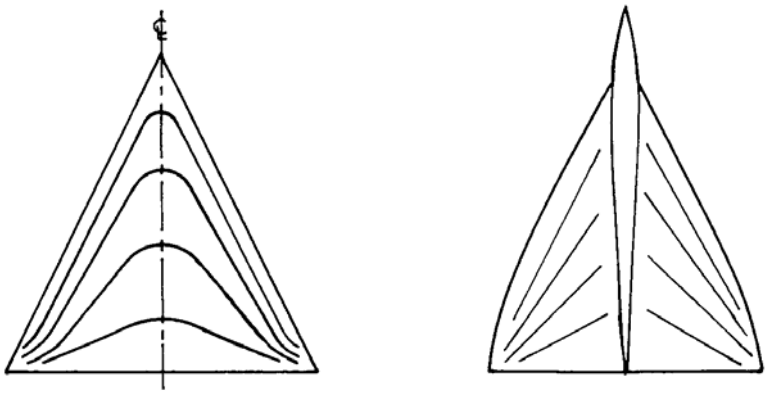

(a) Isobar sweep on a delta wing before and after addition of body.

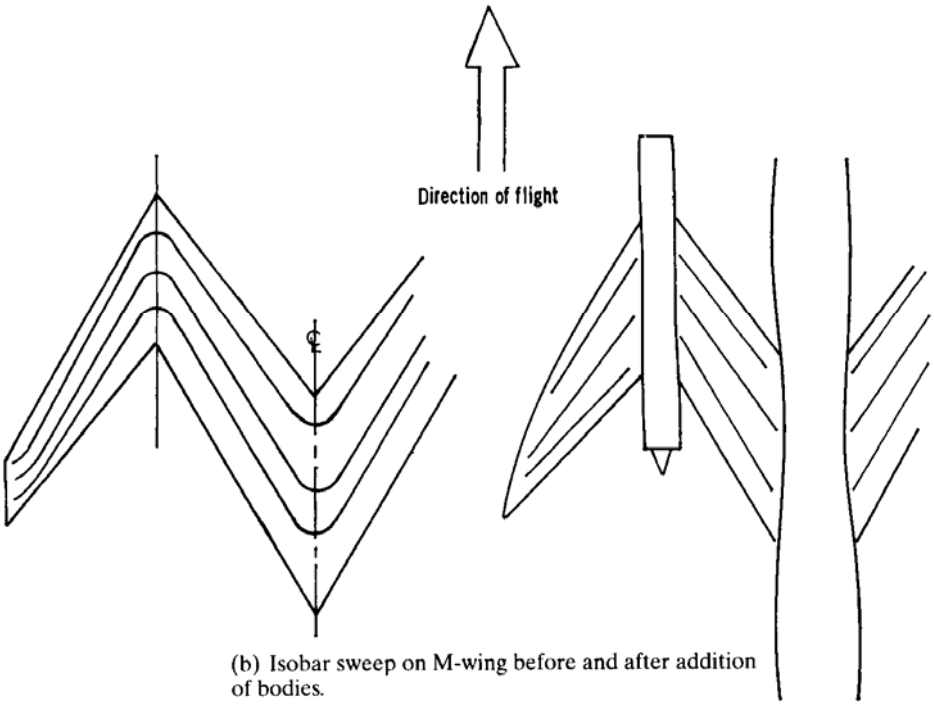

(b) Isobar sweep on M-wing before and after addition of bodies.

Fig. 6.19 The effect of favorable junctions and streamwise tips on isobar sweep at the design point.

For tractable handling characteristics at the onset of compressibility many recent high subsonic transport aircraft have featured negative camber at wing roots to locally straighten the isobars, and revised wing-body fairings that are quite unlike that shown in Fig. 6.18. A typical root section and body fairing are shown in Fig. 6.20.

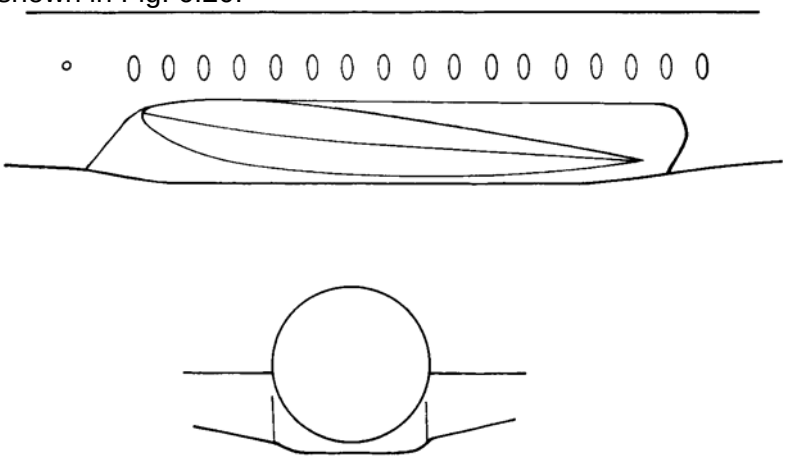

Fig. 6.20 Negative camber at wing root, and body fairing to reduce compressibility effects.

The negative camber is only the root-end of several possible changes of camber across the span

which, when allied with wash-in and wash-out (increase and decrease in wing incidence - the angle at which the wing is rigged and, hence, angle of attack) of different parts of the wing, serve to make every part of the wing work at the same lift coefficient; in so doing the root is made to stall at the same time as the tip.

The fairing is seen to be, in effect, a slab-sided distension of the fuselage which the wings meet almost at right angles. In this way the local flow is least altered between the leading and trailing edges of the wings, while the additional volume usefully increases the stowage volume, which is always in demand. Such a bulge beneath a wing is less critical than above, because the relative velocity of the airflow below is not so near M_{crit}. It should be noted that many high-speed jet aircraft now feature slab-sided body fairings, with rounded corners, at wing and tail junctions.

6.4 Design for optimum lift/drag when range flying

In being able to control lift and drag and, under certain conditions, to vary both at will beyond the range of values achievable with the basic shape of an aeroplane, we are able to extend the efficiency over a much wider part of the flight envelope. The aerodynamic efficiency is measured in terms of lift/drag, and one of the most important aspects of performance is that an aeroplane should be able to fly as far as possible on a given quantity of fuel.

Although the range-flying efficiency of an aeroplane depends, aerodynamically, upon the attainment of high lift/drag, in practice the maximum value is not used. The actual value, $(L/D)_R$, is within a few percent of the maximum. Using this value, Eqn (4-11) can be restated as:

$$\text{Range varies as } \left(\frac{L}{D}\right)_R \left(\frac{M}{c'}\right) \log_e \left(\frac{W_0}{W_0 - W_F}\right) \qquad (4\text{-}11a)$$

All of the terms do not have the same influence upon the equation and to understand why they must be recombined. In the recombination the propulsive term, (1/c'), which is the reciprocal of the thrust specific fuel consumption, must be considered with

$$\log_e \left(\frac{W_0}{W_0 - W_F}\right) \qquad (4\text{-}11b)$$

the structure weight term. The faster the design cruising speed, the greater the drag and the thrust required from the engines. The higher the thrust, the thirstier the engines and the more the fuel needed to fly a given distance.

Jet aeroplanes cruise at speeds of M = 0.6 upwards. Fortuitously, throughout the whole range of speeds where air-breathing engines can be used, which is up to M = 10, the product

$$\left(\frac{1}{c'}\right) \log_e \left(\frac{W_0}{W_0 - W_F}\right) \qquad (4\text{-}11c)$$

is very nearly 1. In fact it rises to 2 at high Mach numbers, but even then the effect of the product upon the whole equation is much less than that of the rest, which varies more widely. Therefore we may say that, for simple practical purposes:

$$\text{Range varies as } M\left(\frac{L}{D}\right)_R \qquad (4\text{-}11d)$$

As the range is specified we see that as the cruising Mach number is increased by the requirements, the cruising lift/drag may be allowed to fall. It is this fact that has enabled a fruitful search to be made for supersonic cruising shapes with apparently low lift/drag ratios.

The cruising Mach number is directly proportional to range. One may consider flying the Atlantic at M = 2, but it would be uneconomical to consider flying only 500nm at the same speed, simply because the large value of M does not have enough time to affect the block speed, upon which economy depends (see Fig. D.1). The 4000nm or more to the west coast of America may be flown with reasonable economy from European airports at M = 3 before very long. Various design studies have yielded the following formula for calculating 'good' values of $(L/D)_R$ for transatlantic distances of around 3000 nm:

$$R = 4\,(M + 3) \qquad (6\text{-}1)$$

so that $$M\left(\frac{L}{D}\right)_R = 4(M + 3)$$

i.e. $$\left(\frac{L}{D}\right)_R = 4\left(1 + \frac{3}{M}\right) \qquad (6\text{-}2)$$

Evaluation of this equation results in a band of state-of-the-art values, as shown in Fig. 6.21, that falls asymptotically from around 20 at M = 0.5 to 5, around M = 4. The shape of the figure should be compared with Fig. 6.12.

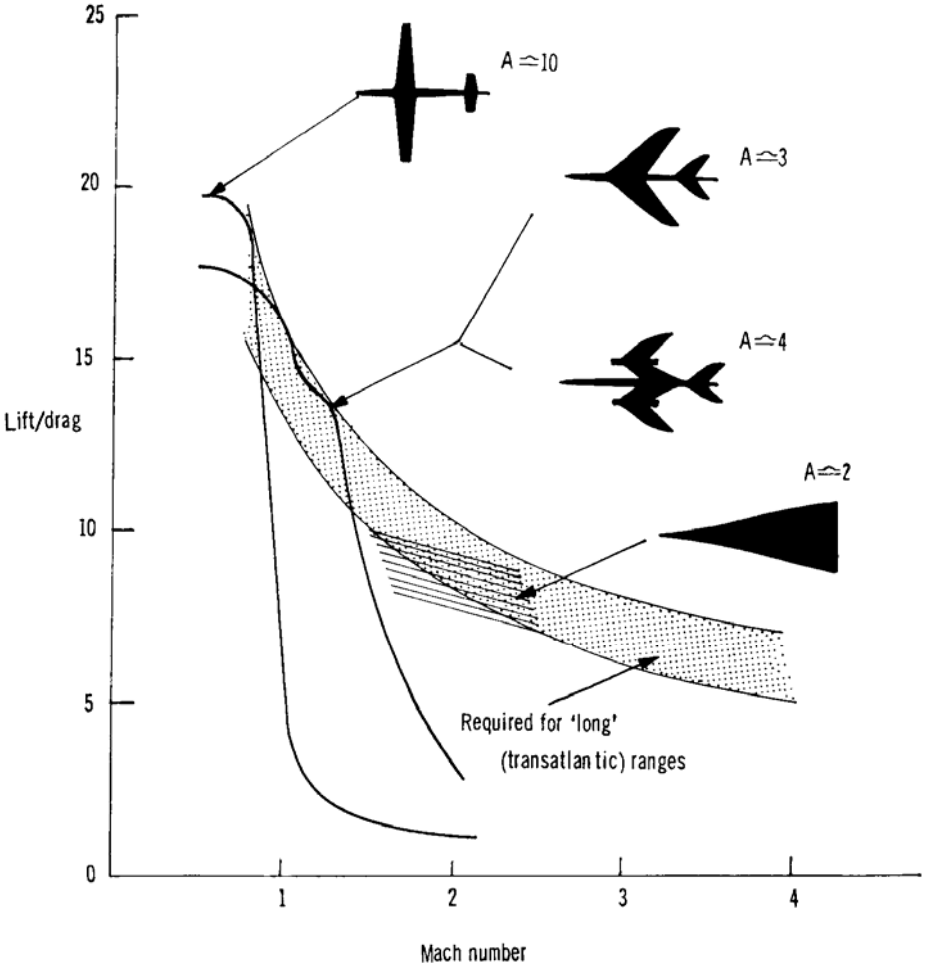

Fig. 6.21 Shape trends giving 'good' lift/drag ratios for typical long ranges of transatlantic order (3000nm).

6.4.1 The effect of aspect ratio

Imagine that an aeroplane is cruising at constant weight and therefore lift: how exactly does the drag vary with airspeed? We saw from Fig. 5.18 that the total drag has two terms: drag at zero lift, and lift-dependent drag, i.e.

$$D = D_F + D_L \quad (6\text{-}3)$$

and $$C_D = C_{DF} + C_{DL} \quad (6\text{-}4)$$

where C_D is the drag coefficient used in Eqn (5-9).

As long as flight is at a subcritical Mach number there is no wave drag and C_{DF} remains sensibly constant with airspeed. When flight is at a supercritical Mach number C_{DF} is increased by wave drag components. The vortex drag, on the other hand, must decrease with speed, because the wing flies at a smaller angle of attack and the circulation causing the vortex system varies directly with angle of attack. In fact, at subcritical speeds the lift-dependent drag coefficient is given by

$$C_{DL} = \frac{K C_L^2}{\pi A} \quad (6\text{-}5)$$

where π, C_L and A have their conventional meanings and K is a factor measuring the efficiency of the planform. When the planform and lift distribution are elliptical C_{DL} is a minimum, i.e. K = 1. For 'normal' planforms K varies between 1.1 and 1.3. In fact K might reasonably be called the 'inefficiency factor' of the planform.

The total drag may be plotted as shown in Fig. 6.22(a), which is similar to Fig. 4.9.

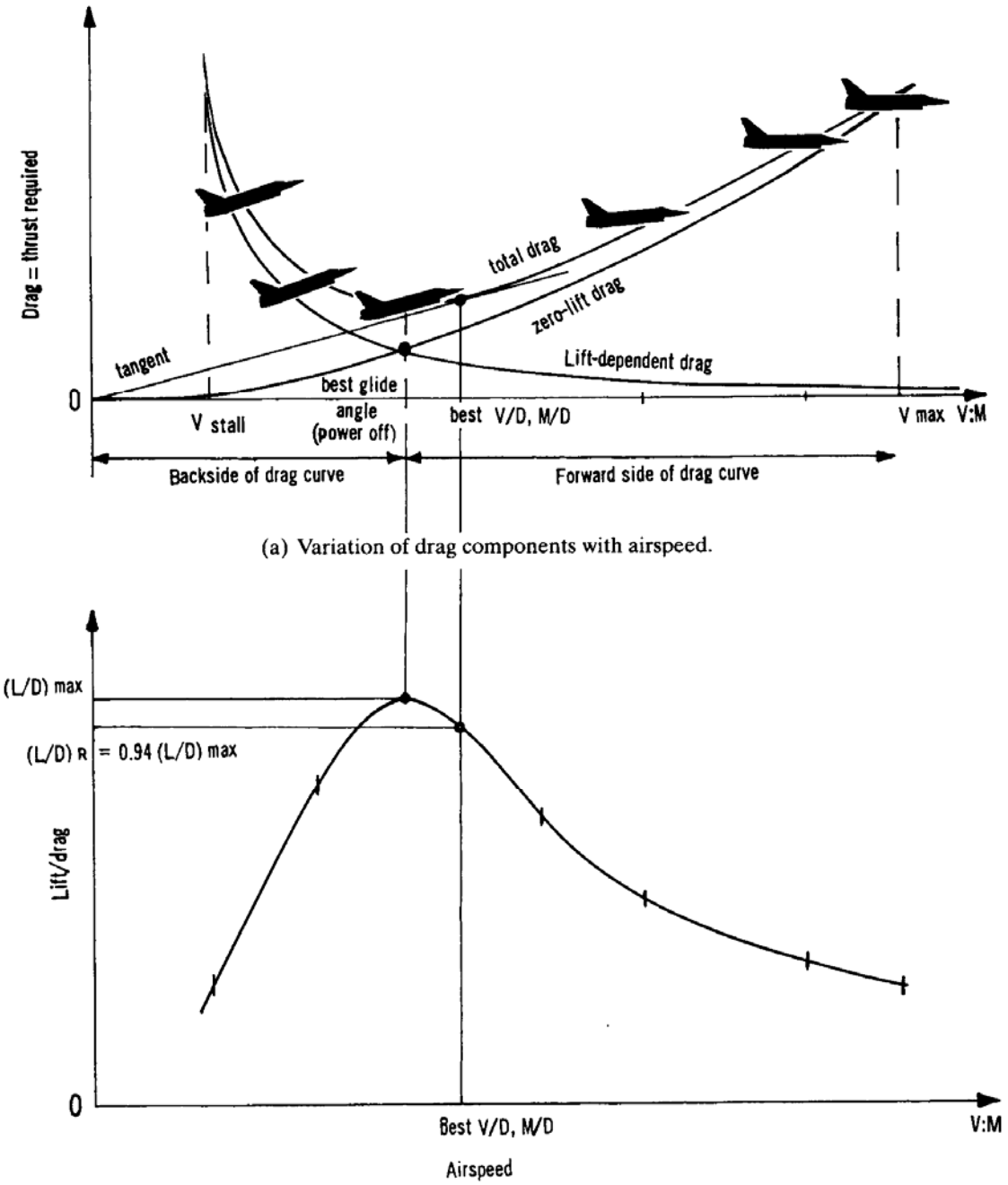

Fig. 6.22 Variation of drag and lift/drag with airspeed at constant weight.

The minimum drag, corresponding with maximum lift/drag, occurs where $C_{DF} = C_{DL}$, i.e.

$$C_{D\,min} = \frac{2K\,C_L^2}{\pi A} \qquad (6\text{-}6)$$

and $$C_L = \sqrt{\left(\frac{C_{DF}\,\pi A}{K}\right)} \qquad (6\text{-}7)$$

Now, the best lift/drag corresponds with C_L/C_{Dmin} at the design point in question, so that from Eqn (6-6) and (6-7), the maximum (L/D) is given by

$$\left(\frac{L}{D}\right)_{max} = \frac{1}{2}\sqrt{\left(\frac{\pi A}{C_{DF}\,K}\right)} \qquad (6\text{-}8)$$

The speed for best speed/drag, i.e. M/D, at constant lift is, in fact, the speed for best $M(L/D)_R$. It may be seen from Fig. 6.22(b) that $(L/D)_R$ is about 0.94 $(L/D)_{max}$, from which we obtain the relationship:

$$A = \frac{9}{2\pi} K\,C_{DF}\left(\frac{L}{D}\right)_R^2 \qquad (6\text{-}9)$$

The aspect ratio, planform efficiency factor and zero-lift drag coefficient all lie within the control of the designer. If a particular planform is chosen to match the design point: wing sweep for Mach characteristics,

section for both Mach characteristics and stowage volume, then the essentially constant terms can be evaluated with the aid of wind-tunnel tests to leave the relationship that aspect ratio, A, varies as

$$C_{DF}\left(\frac{L}{D}\right)_R^2$$

The planforms shown in Fig. 6.21 have aspect ratios and shapes that give 'good' cruising lift/drag values at their design points. Note that the classical subsonic aeroplane has an aspect ratio around 10, while the slender-delta, with an aspect ratio around 2, satisfies the transatlantic range requirements from M = 2 onwards. When Fig. 6.22 is compared with Fig. 6.12 the efficiency of variable geometry is made doubly apparent: provided one is willing to pay the price of mechanical complexity and increased first cost.

6.4.2 The effect of wetted area

The calculation of $(L/D)_{max}$ can be approached in another way, although it is one that involves making a broad assumption that the zero-lift drag depends more upon skin friction than upon pressure effects. This is reasonable because the highest lift/drag is achieved in subsonic (subcritical) flight, where pressure usually has a much smaller effect than friction upon the zero lift/drag.

We saw from Eqn (6-6) that C_{Dmin} occurs where $C_{DF} = C_{DL}$, and assuming that C_{DF} depends upon friction alone in subcritical flight, where

$$C_{DF} = \frac{A_w}{S} C_{Dfric} \qquad (6\text{-}10)$$

we may therefore write:

$$C_{D\,min} = 2C_{DF} = 2\frac{A_w}{S} C_{Dfric} \qquad (6\text{-}11)$$

This should be compared with Eqn (6-6), while variation in $\frac{A_w}{S}$ can be seen in Fig. 6.2. Now, drag at zero lift in subcritical flight can be written as

$$C_{DF} = \frac{f}{S} \qquad (6\text{-}12)$$

where f is a term, called the 'equivalent parasite area' of an aircraft: the sum of every increment of surface area times the C_{Dfric} of each element. In subcritical flight $C_{Dfric} \cong C_{DF}$. The C_{Dfric} of each element depends upon the surface roughness and the degree of turbulence in the boundary layer. The slipstream from propellers increases the C_{DF} of an aircraft by about 33% over that of an equivalent machine powered by turbojets.

Values of C_{Dfric} vary between different parts of the airframe. Typical values are: 0.003 for the wing, 0.0024 for the fuselage, 0.006 the engine nacelles, 0.0025 the stabilizers, to all of which is added a further 5% for interference. An American formula, which is said to have an accuracy within 3%, calculates f on the basis:

$$f = 1.10 + 0.128N_P + 0.007S + 0.0021N_e\left(F_e\right)^{0.7} \qquad (6\text{-}13)$$

where N_P = number of passengers

S = wing area

N_e = number of engines

F_e = static sea level thrust per engine

(1.10 represents the area of nose and tail of the fuselage).

The wetted area of an aircraft is the area of surface exposed to the air. In calculating values of wetted area certain components are blanketed by others. The wing and tail, for example, do not have the same gross areas used for calculation of aspect ratio, instead the net area lying outside the fuselage and engine nacelles must be used. Similarly, areas of fin, nacelles and fuselage, where wing and tail join to body, must be subtracted from the total area.

The wetted area of a wing is a little more than twice the net area, a reasonable estimate is to add about 1/3rd of the thickness ratio of the section. A wing with a t/c ratio of 12% would have, therefore, a wetted area (2 + 0.12/3), or 2.04 times the net wing area. The surface area of a body can reasonably be approximated to a gross solid of revolution and the wetted area calculated by multiplying the area in side view by π.

Returning to the condition for C_{Dmin} we see from Eqn (6-6) and Eqn (6-11) that

$$\frac{K C_L^2}{\pi A} = \frac{A_w}{S} C_{Dfric}$$

whence $$C_L = \sqrt{\left(\pi \frac{b^2}{S^2} \frac{A_w}{K} C_{Dfric}\right)} \qquad (6\text{-}14)$$

Using Eqn (5-11) we may rewrite Eqn (6-8) as

$$\left(\frac{L}{D}\right)_{max} = \frac{\sqrt{\pi}}{2} \sqrt{\left(\frac{b^2}{C_{DF}\, S K}\right)}$$

we may then substitute for C_{DF} S by transposing Eqn (6-10) to give

$$\left(\frac{L}{D}\right)_{max} = \frac{\sqrt{\pi}}{2} \sqrt{\left(\left[\frac{b^2}{A_w}\right] \frac{1}{K\, C_{Dfric}}\right)} \qquad (6\text{-}15)$$

from which $(L/D)_R$ may be obtained as before.

The term $\left(\frac{b^2}{A_w}\right)$ is the span^2/wetted area, a relative of the aspect ratio, (b^2/S). Some idea of the range of values may be deduced from a consideration of Fig. 6.2. Typical values of C_{Dfric} vary from 0.002 to 0.003, and taking account of the variation in K for 'normal' planforms, Fig. 6.23 may be drawn.

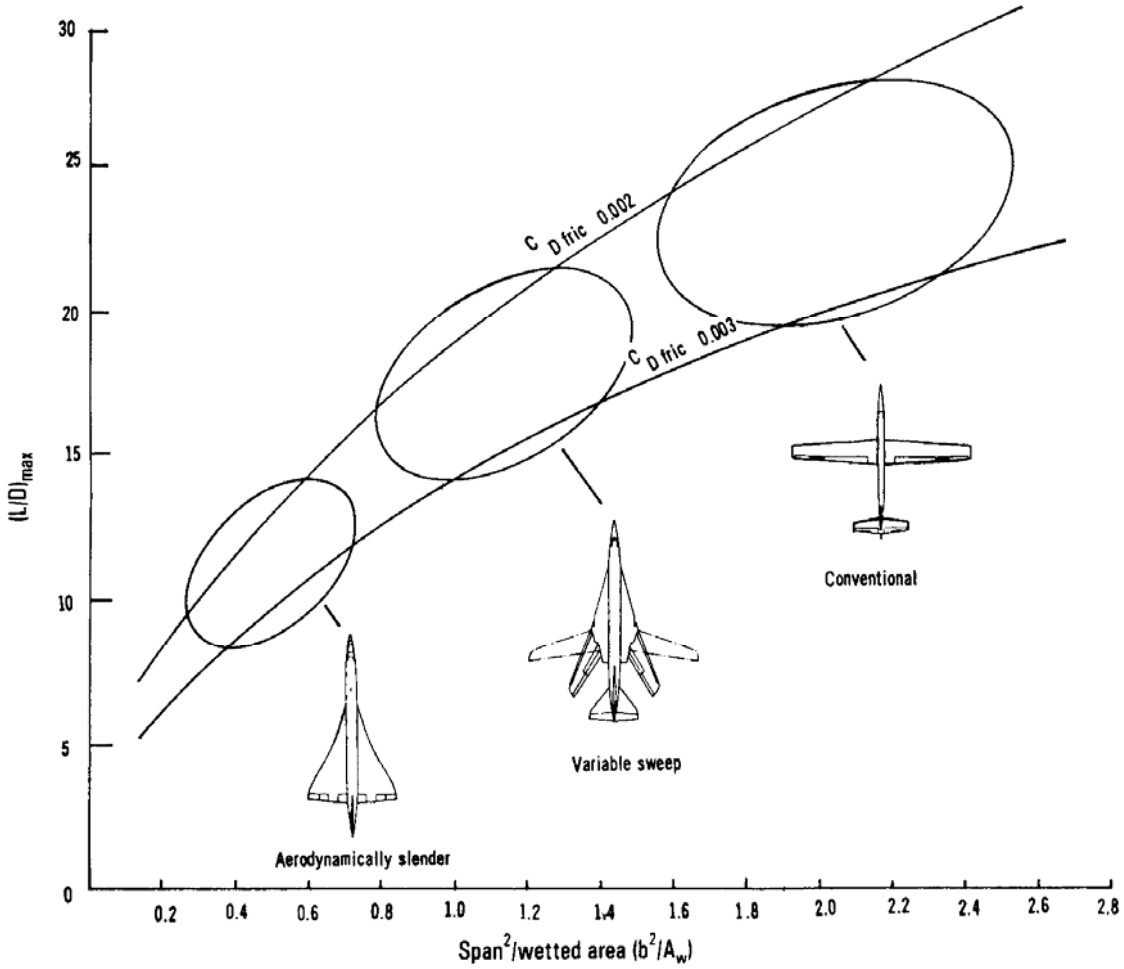

Fig. 6.23 Subsonic (subcritical) cruise relationship between span, wetted area and frictional drag coefficient.

This shows the importance of wing span in the design of aircraft for high aerodynamic efficiency in the subsonic regime. It also gives some idea of the need for high-quality surface finish, and of the likely benefits accruing from the use of boundary layer control. If, as results suggest, the zero-lift drag may be reduced to 1/5th the normal values by the use of distributed suction, then Eqn (6-15) shows that $(L/D)_{max}$ might at least be effectively doubled.

6.4.3 The importance of low span loading

It was said in Section 5.2.5 that once the planform of a wing is fixed the lift-dependent (vortex) drag depends upon span loading (and not upon aspect ratio) for the span loading is a measure of the average pressure difference between the upper and lower surfaces. The lower the span loading, the lower the pressure

difference, and the lower the pressure difference the further away is the wing operating from those conditions where separation becomes critical.

The argument can be shown mathematically as follows:

$$D_L = C_{DL}\, q\, S \qquad (6\text{-}3a)$$

where

$$C_{DL} = \frac{K C_L^2}{\pi A} \qquad (6\text{-}5)$$

and

$$q = \frac{1}{2}\rho V^2 \qquad (1\text{-}5)$$

In level flight L = W and, from Eqn (5-8):

$$C_L = \frac{W}{qS} \qquad (5\text{-}8a)$$

and

$$qS = \frac{W}{C_L} \qquad (5\text{-}8b)$$

Therefore

$$D_L = C_{DL}\frac{W}{C_L}$$

and, as

$$A = \frac{b^2}{S}$$

from Eqn (5-11), we may restate Eqn (6-3a) using Eqns (6-5), (5-8a) and (5-8b):

$$D_L = \frac{K}{\pi q}\left(\frac{W}{b}\right)^2 \qquad (6\text{-}16)$$

Hence, the lift-dependent drag at a given speed and height varies as the planform factor, K, and the span loading $(W/b)^2$. It follows that the lift-dependent drag changes with the weight of the aeroplane, as long as the planform, and K, remain unchanged by variable geometry.

Flight at high altitude

The ability to fly high implies the ability to climb high, and that depends in turn upon the best (L/D) at altitude. In Fig. 5.18 we saw the way in which drag can be split into two main components: lift dependent and zero lift. For simplicity let us group them simply as induced and parasitic. To achieve the best climb performance at any altitude the induced drag caused by the lifting vortex system - coarsely, D_L in Eqn (6-16) - must be a minimum.

The best climb speed of an aeroplane with all engines running is around 1.3 -1.4 V_S, at which speed the ratio of (parasite drag/total drag) = about 0.25, so that the remaining (D_L/D), is a dominating 0.75, i.e. 75% of the total. Therefore, substituting weight for lift, we may say that best altitude performance varies as (W/D_L), which becomes from Eqn (6-16):

$$\text{Best lift/drag at altitude = approx. } \left(\frac{W}{D_L}\right) = \left(\frac{W\pi q}{K}\right)\left(\frac{b}{W}\right)^2 \qquad (6\text{-}17)$$

in which the term $\left(\frac{W\pi q}{K}\right)$ is substantially a constant. From this we see that the best performance at altitude is achieved by a long wingspan, b, and a low span loading, (W/b).

Long wings are destabilizing directionally. Fin and rudder areas are necessarily greater than those of aeroplanes with more conventional wingspans.

Figure 6.24 compares the planforms of 3 long-winged aeroplanes designed for high-altitude operations. The Myasishev M-55 (Mystic-B) is a two-seat, twin-boom, twin-jet Russian reconnaissance and environmental research aeroplane intended to cruise at altitudes in excess of 65,600 ft. One might speculate about the twin-boom layout. The need for greater fin and rudder area could be eased by twin booms, ending in twin vertical surfaces supporting a high-set stabilizer. Thus the area would be split, enabling the tailplane and elevator to be mounted at a more modest height, while improving the efficiency of the fins by acting as an end-plate. It is possible that for such a slow-flying aircraft, twin booms represent a saving in structure weight, by providing split support for the tailplane, while reducing the size and weight of the central nacelle and

exhaust tailpipes.

The M-55 was evolved from the single-engined M-17, the Soviet Russian response to the high-altitude intelligence-gathering Lockheed U-2 (inset top), which became operational around 1956. The German Grob G 520 Egrett (lower inset) with a turboprop engine held the civil FAI absolute altitude record for a propeller-driven aeroplane of 53,574 ft in 1988. That record has since been broken. With military potential, the type suffered from defence cuts at the end of 1993. G 520s which survive are intended for high-altitude environmental and atmospheric research, including the investigation of incident radiation from space and its reflection back from Earth. Note the aft-raked tips with long trailing edges, discussed earlier, to achieve the highest possible aerodynamic aspect ratio.

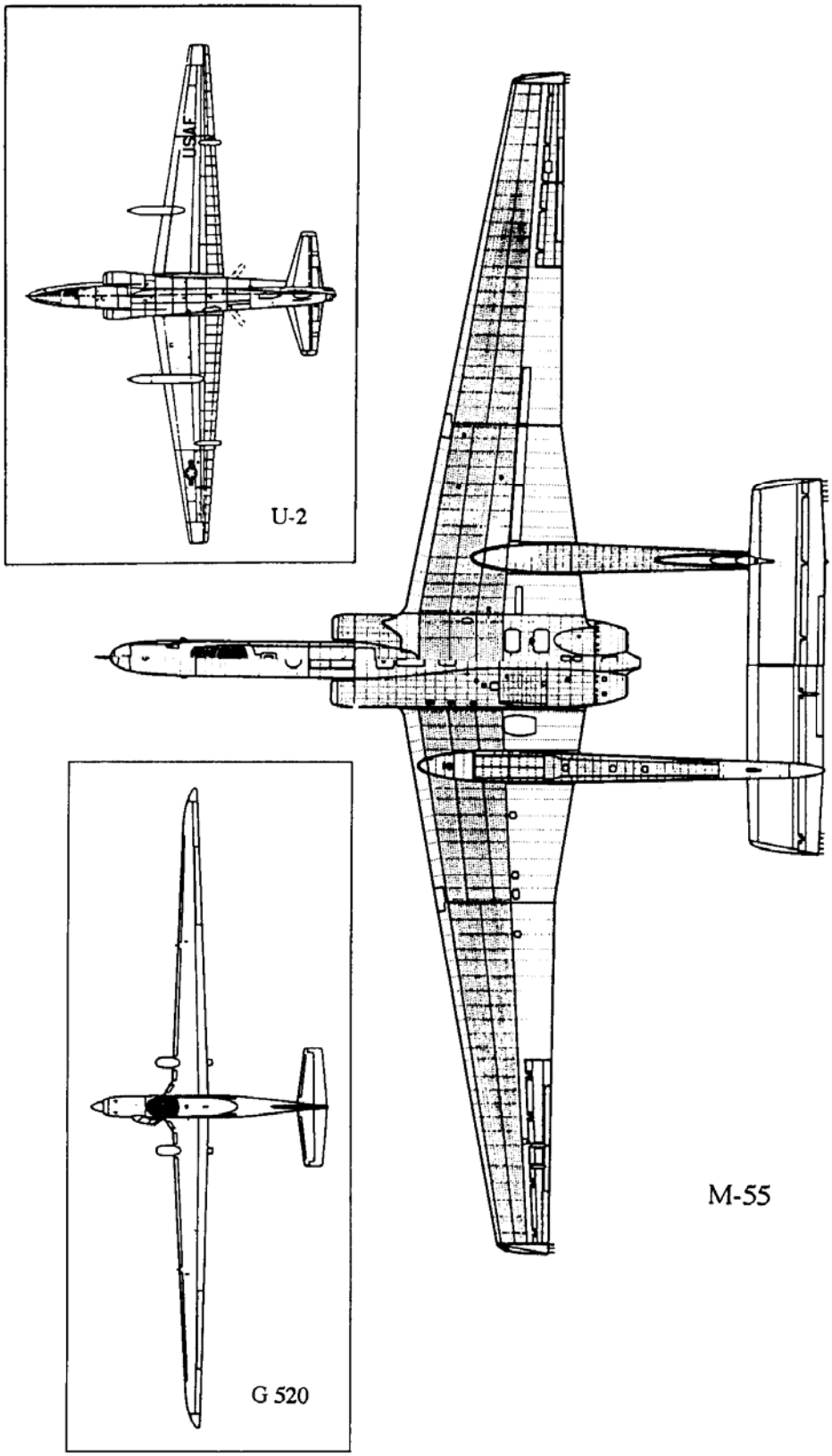

Fig. 6.24 Long wings and low span loading for high-altitude performance. The Russian Myasishev M-55 for high-altitude reconnaissance and research in 1997, compared with the Lockheed U-2 (top inset), operational 1956, strategic reconnaissance; and the Grob G 520 (bottom inset), a program begun in 1984 for high-altitude environmental and atmospheric research.

In the past aircraft have had their wings modified subsequently to meet changes in operational requirements. Two examples from World War II were the German Junkers 86P and R, for high-altitude bombing and reconnaissance, and the British Spitfire Mks VI and VII with tip extensions shaped so as to reach and intercept them. The modification made their wings unhealthily pointed, which invited tip-stalling at low Reynolds numbers (Eqn 5-13).

As a rule, long wings which bestow high-altitude performance also provide long range and endurance. Much faster true airspeeds are achieved at high altitudes than at low, for the same equivalent and indicated airspeeds (Fig. 1.3).

6.5 Design for stealth (low-observability)

In Section 1.3.5 we encountered the electromagnetic spectrum, reflectivity of a body and the concept of radar cross-section, RCS. This is the apparent cross-section perceived by a radar scanner when a body is reflecting electromagnetic radiation. Design for stealth involves adjusting the shape of angles between the surfaces of an aircraft and/or coating them with special paint and other radar-absorbent materials (RAM), so as to reduce the RCS normal to the line of sight of a scanner. If it is possible to scatter or otherwise absorb incident electromagnetic radiation, then an aircraft can be made to 'disappear' from a radar screen; even if it is not made invisible such treatment may reduce the electro-optic radar and infra-red (IR) signatures enough to hide its precise position, if not its presence. Even the acoustic signature may be reduced by careful treatment.

The term 'stealth' was first used in the mid-1970s to describe a low-observable aircraft, yet the physical phenomenon was not new, it had applications during World War II. All structures resonate in response to incident electromagnetic energy, transmitting 'echoes' and surface, airborne and satellite sensors are able to detect electro-optic signatures. Materials are used which, if not radar-transparent, reduce the amount of energy being reflected. To be completely radar-transparent the material must have the same impedance as free-space, i.e. 377 Ohms. Glass-fiber is radar-transparent, which is why it is hard to detect sailplanes (and yachts) by radar, but glass-fiber is fairly useless for high-performance aircraft and heavy loadings. Reinforcement is achieved with carbon and boron fibers which, depending upon density, reflect energy almost as well as metal. For military purposes RAM is essential.

The Germans are credited with some of the earliest work on changing the reflective properties of aircraft, ships and submarines. Experiments were carried out using the Horten IX, which was a flying-wing with a minimum reflective area additional to that needed to provide lift. Fuselage and engine nacelles were buried and well faired into the wing surfaces. The jet pipes were set forward of the wing trailing edges, where the boat-tail shielded infra-red emissions to an extent. The structure is said to have contained composite elements intended to absorb the energy of incident radar. The De Havilland Mosquito was hard to detect on radar, in spite of two Rolls-Royce Merlin engines and metal propellers, because it was made from a balsa and plywood sandwich. Figure 6.25 shows the forms of both aeroplanes in historic official drawings of the 1940s, which convey the essence of both when little other information had been released.

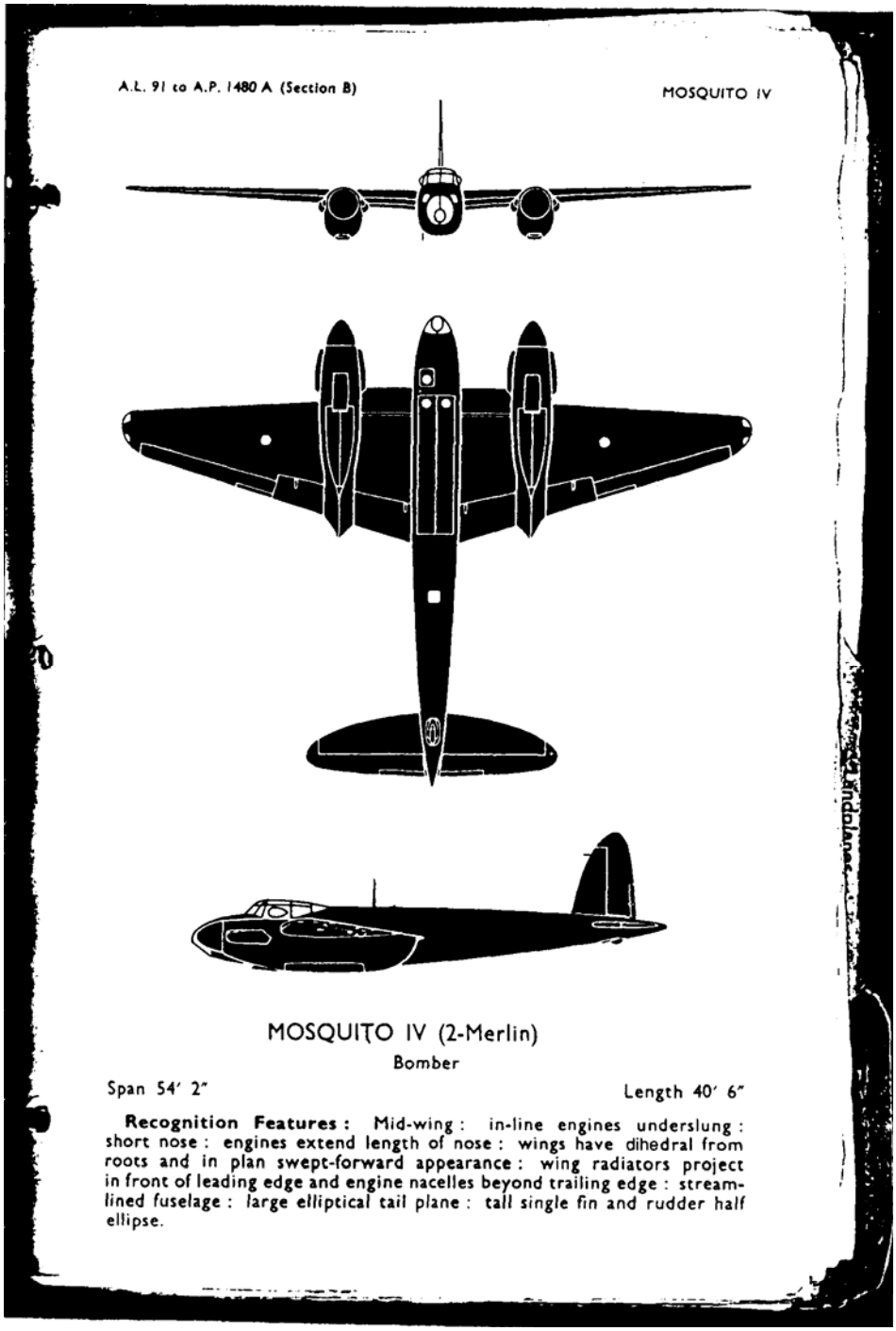

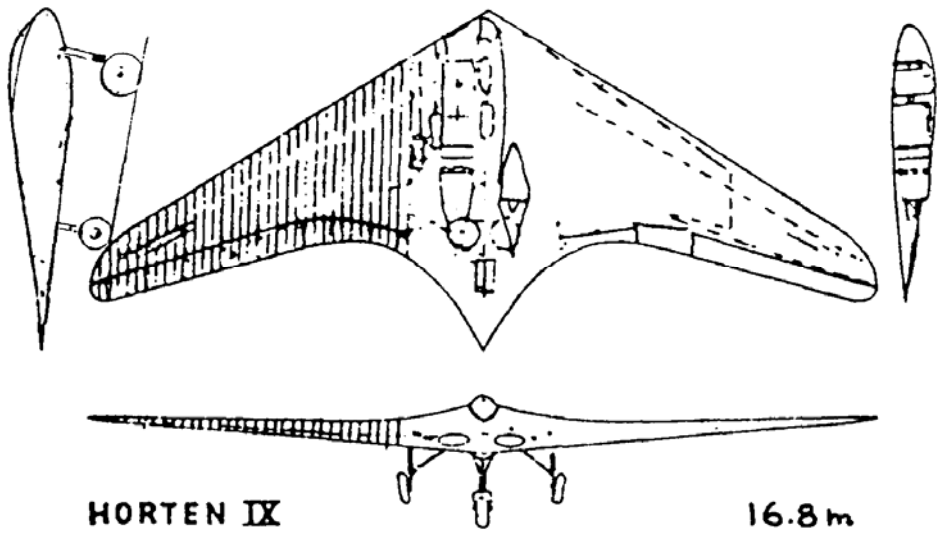

Fig. 6.25 The wooden Dc Havilland Mosquito (a) and Horten IX (b) had low-observable qualities due to form and the materials from which they were built. These broadly contemporary drawings, from Air Ministry sources which were then classified, date from the 1940s when few details had been released. They convey the essence of what was then being achieved by accident if not entirely by design.

6.5.1 Radar-absorbent materials (RAM)

Various protective radar-absorbent coatings have been devised which contain minute metal particles as flakes or spheres. The diameter and density of the micro-spheres per unit volume determines the radar frequency absorbed. Such paints are heavy, and there is an apocryphal story from World War II of an aeroplane at the then RAE, Farnborough, being so heavy after painting that it failed to take-off. It is almost impossible to find a universally absorbent paint for all radar wavelengths. Resonance occurs when reflecting materials are longer than half wavelength, i.e. $\lambda/2$, and it follows that the longer and straighter the material the more likely it is to produce a detectable echo. If the material is curved the radar echo is much reduced, but even with paint containing small particles, one has only to send out pulses over a wide spectrum of frequencies to find one which illuminates the target.

There are two kinds of RAM: broad-band and narrow-band. Broad-band pyramid absorbers (resembling an egg-box, or lining of an anechoic chamber), absorb radar energy over a wide range of frequencies by resistive heating. They are not smooth and would destroy the aerodynamics of an aircraft. Narrow-band RAM is smooth and works on the *Salisbury Principle*: that half the radar energy is reflected back from the front face of the material, while the remainder travels on through $\lambda/4$ thickness of material to the fully reflective backplate, it then returns through the same distance, but is now $\lambda/2$ (i.e. 180^0) out of phase and suffers destructive interference. Under ideal conditions there would be no return from the material and the aircraft would be invisible to radar, but only at the exact frequency with which the value of λ corresponds.

(picture)
Plate 6-3 (a) An historic example of a highly successful private venture and stealthy aeroplane for its time. The T III version of the De Havilland Mosquito of World War II.

(picture)
Plate 6-3 (b) The low-observable advanced tactical fighter (ATF) Lockheed F-22. Note serrated or saw-tooth panel joints, and chamfered junctions at flap and aileron roots and tips. Chamfering is also apparent at the root of leading-edge flaps (see also Appendix E).

6.5.2 The use of shape

Around 1959 Lockheed's experts with 'widgets, doodads and thingymajigs' in the small, highly skilled and intimate 'Skunk Works', located within the main factory in California, developed the (A-12) SR-71 reconnaissance aeroplane to fly at 3 times the speed of sound, at altitudes then out of reach of interceptors and missiles (Fig. 8.18). The SR-71 combined a number of unusual features: the long forebody had marked lateral chines, blending into the sharply swept leading edges of the wings; body and engine nacelles were highly curved and faired into the wing surfaces, to scatter incident waves and eliminate corner reflections; twin fins inclined inwards also, to scatter incoming radar energy; wing leading edges contained titanium triangles (dog-toothing), edged with radar-reflecting plates, to trap incident waves internally by reflecting them into each corner; leading edges were then filled with radar-absorbent pyroceramic inserts; the finish was with infra-red and radar energy absorbing iron ball paint. The internal structure contained epoxy and ferrite, optimized to absorb free electrons, so converting their kinetic energy into heat.

The SR-71 is said to be visible to the naked eye before it appears on radar. Flying against two advanced opposing interceptor aircraft at high altitude, the tracking radars of both were reported to be unable to lock-on.

Improvements followed: the subsonic Lockheed F-117A and Northrop B-2A bombers; the supersonic Lockheed YF-22 and Northrop McDonnell Douglas YF-23 fighters are all described as 'scientists' aeroplanes'. Their handling qualities can be disguised by electronic signaling to their controls from a central computer, with artificial 'feel' fed back to the pilot, to give the impression that the aeroplane is stable. In the event of a fuse blowing multiplex systems provide back-up.

Other considerations are the use of wing and tail leading-edge structures shaped to trap radar energy by means of internal reflection and dissipation (Fig. 6.26) and the filling of engine intake cavities with dipole bodies, or centre-bodies, to scatter radar reflections.

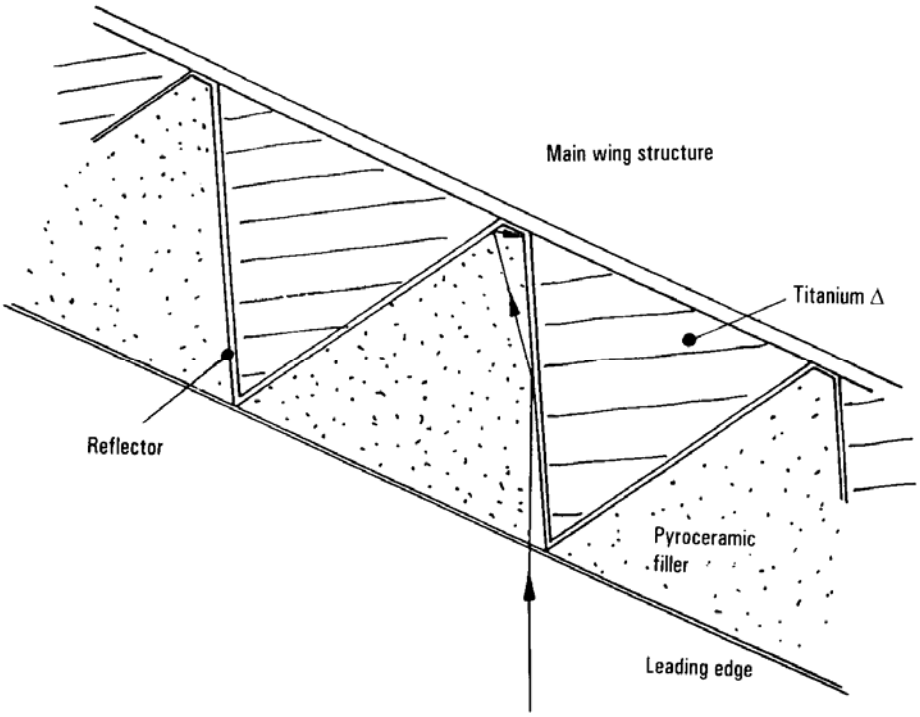

Fig. 6.26 Leading-edge structure shaped to trap radar energy.

Intake and exhaust ducting is bent so as to hide the body of the engine from direct line-of-sight (Fig. 6.27 shows such treatments).

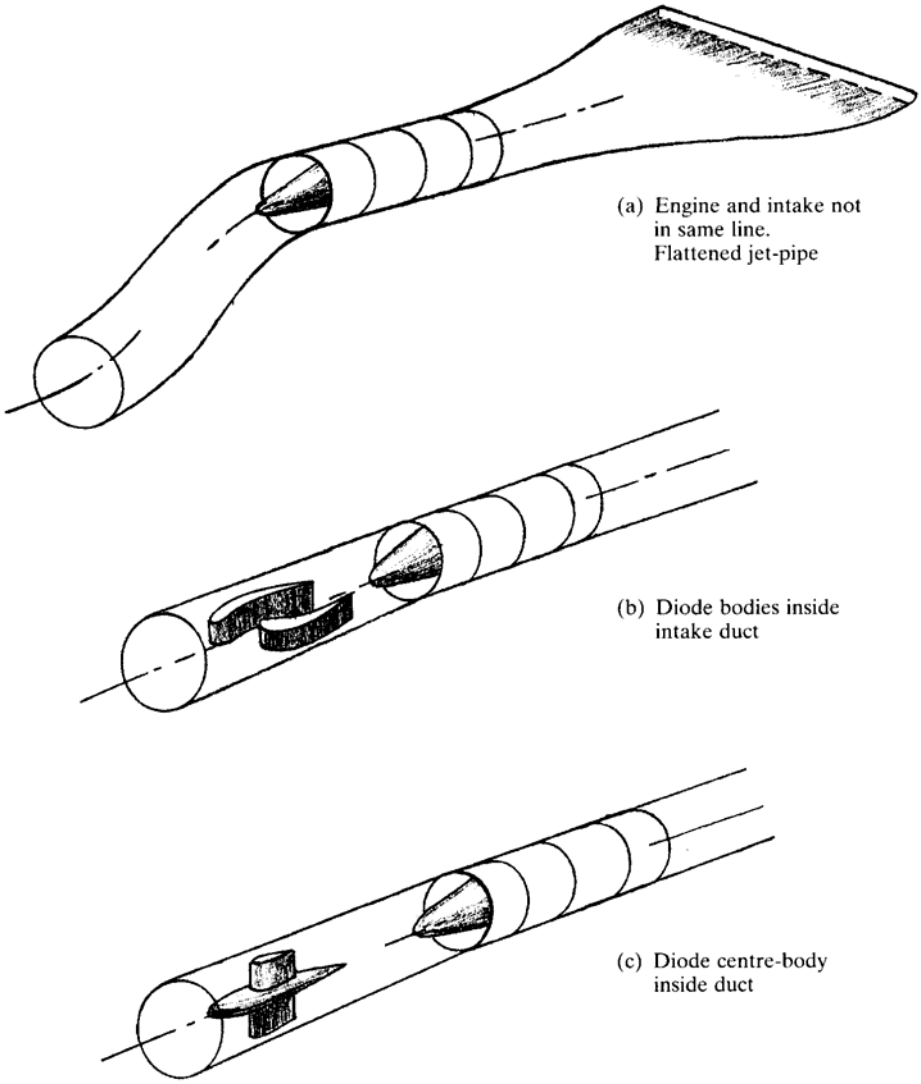

Fig. 6.27 Examples of intake, engine and tailpipe features which enhance stealth by diffusing electromagnetic signals.

Jet-pipes are flattened and may be given saw-tooth edges, as well as cascades which not only stiffen them,

but act as dipoles. Subsonic intakes may also be covered with a mesh, as on the F-117A, each element of which acts as a dipole.

Cockpit glazing is laminated and treated with gold film, optimized to reduce radar reflectivity. However, under certain lighting conditions the transmissivity of gold is inadequate and indium tin oxide is used instead, it has the same effect but is cheaper. Conductive metal is a good reflector because of the sharp change of impedance between the air and metal. Gaps between hatches, panels and other parts of the airframe are highly reflective for this reason. Dog-tooth serrations are therefore used around canopy and other panel junctions, where gaps heighten reflectivity, which is also exacerbated in service by wear and tear.

The drawing in Fig. 6.28 of the B-2A bomber summarizes prominent stealth detail. Note the flattened and serrated (dog-tooth) intakes and jet-pipes, the latter exhausting ahead of the trailing edges of the wings, which help to shield IR emissions. Lack of vertical fin and rudder surfaces (directional (and lateral) control being provided by spoilers) eliminate prominent reflective surfaces normal to the line of flight. Planform geometry scatters radar returns. The aeroplane is statically unstable, has aero-elastic tailoring, a computer and electronic flying control systems (in which the pilot, with no little exaggeration, has been described as a servomechanism). Serrations around doors and panels most likely to suffer wear and tear are clearly apparent.

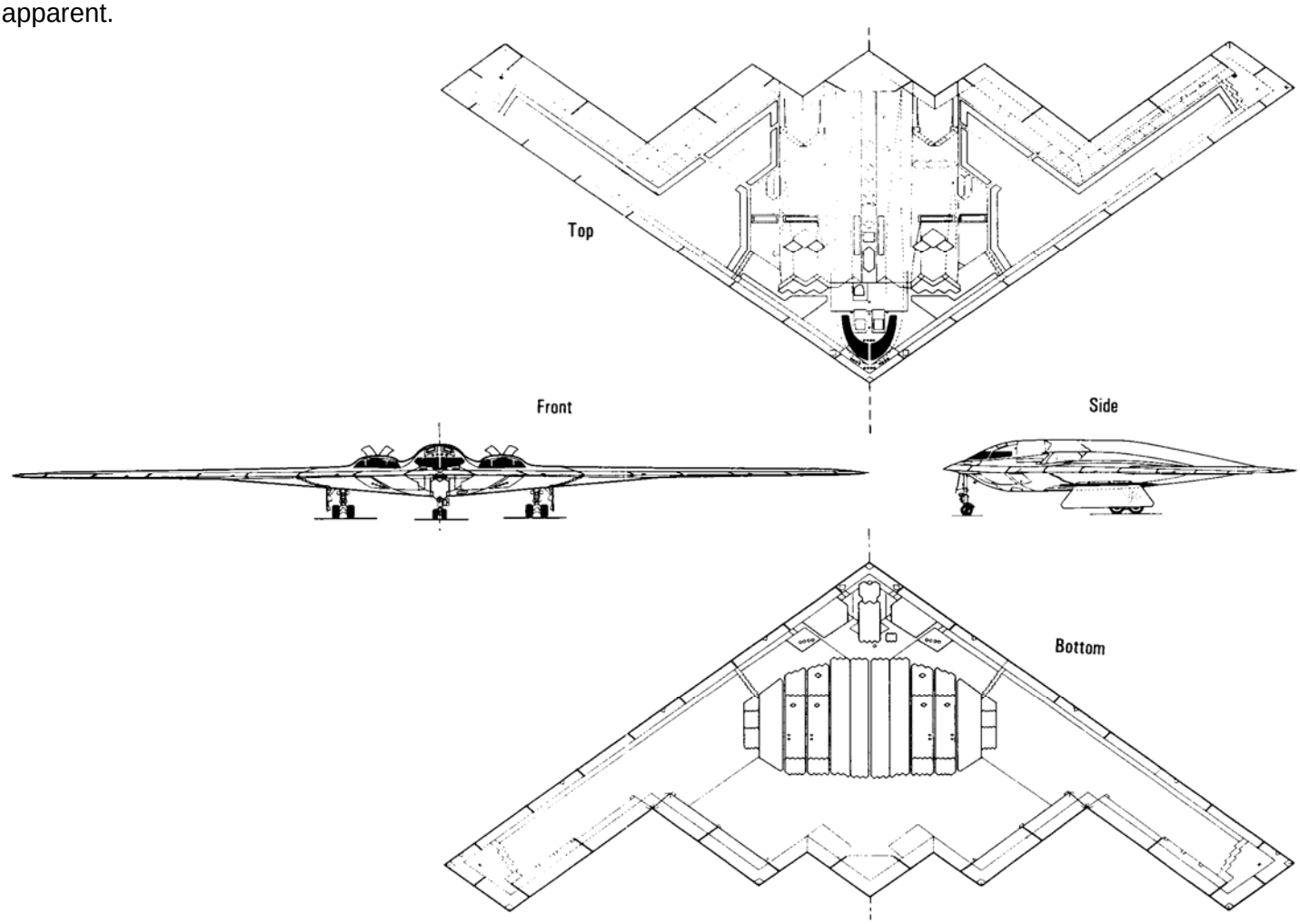

Fig. 6.28 Stealth features of the Northrop B-2A: saw-tooth intakes, panel-edges and trailing edges; flattened jet-pipes, inset from the trailing edge; and airframe surfaces inclined to the lines of sight and flight.

Chapter 7 Engine—Airframe Matching

The process of matching an engine to an airframe involves the designer in a search for the best compromise between the overall lift/drag ratio, airframe weight, cruising altitude, engine size and weight and overall propulsive efficiency. In its simplest form the problem may amount to no more than bolting the best, or most available, engine onto the nose of a light aeroplane, arranging for adequate cooling and exhaust scavenging by rule-of-thumb methods. In its most complicated form the problem becomes one of structural and aerodynamic integration of engine and airframe. In the case of the supersonic aeroplane, intake design may be the biggest single problem. The cybernetics of the control systems of variable geometry intakes and nozzles affords plenty of scope for engineers in the fields of electronics and servo-mechanism design.

The matching of engine and airframe splits conveniently for our purposes into powerplant installations with propellers and those without. In either case it is instructive to consider what happens to the energy produced from the burning fuel. That part of the thermal energy not used in doing mechanical work is lost as

heat through the engine casing and surrounding structure. Some energy is lost through the mere act of heating the air and increasing the kinetic energy of the molecules, for it is impossible to design an installation that does not leave the working mass of air at a higher temperature than it had to start with. The energy that is used usefully overcomes the frictional and pressure drag, in both cases molecules of air are heated by the aeroplane in its passage. Therefore, from the point of view of converting energy into useful work, powered flight is the result of distributing the heat from the combustion of fuel to the surrounding atmosphere. The lower the temperature generated for a given amount of useful work, the more efficient the process.

7.1 Propulsion principles

All aeroplanes are propelled by reaction: by the ejection rearwards of a mass of working fluid or series of particles. The working fluid, usually air gathered up in passage, is mixed with fuel and burnt within the aircraft before being ejected rearwards with increased momentum. The momentum is increased by accelerating the air in its passage through the engine (or propeller), while the mass of the exhaust is slightly increased by the addition of fuel products and, of course, the aircraft grows lighter with time as fuel is burnt.

Here we are principally concerned with gas turbine engines and their variants in which a mass of air is swallowed by an intake and ejected rearwards as a hot jet through a nozzle. The principle of adding momentum is the same as for a propeller-driven aircraft, however, for there is only a difference in technique between accelerating a small mass of air to a high velocity through an engine in a short time, and accelerating a large mass of air to a much lower velocity by using a propeller.

Momentum, which is the product of mass X velocity, may be changed at different rates —the greater the rate of change of momentum, the greater the thrust. The shorter the time in which a change of momentum is required to take place, the more the heat energy that must be added. Hence, the greater the thrust the higher the fuel consumption. For our purposes we shall assume that specific fuel consumption remains constant with speed of flight and engine rev/min — in fact it does not, but changes in sfc are of second order compared with changes in other factors affecting the range equations, Eqn (4-9) onwards.

If a stationary engine imparts a velocity V_j to a mass of air W_a/g every second then the thrust, F, is given by

$$F = \frac{W_a}{g} V_j = m_a V_j \qquad (7\text{-}1)$$

for a jet engine and

$$F = m_a w \qquad (7\text{-la})$$

for a propeller. The terms V_j and w are called the jet and propwash (slipstream) velocities, respectively.

When the jet engine is in motion relative to the air, the working fluid has an initial velocity V relative to the engine, which alters the equation for the total change of momentum. As the velocity imparted to the exhaust is measured relative to the engine, the total rate of change of momentum and thrust becomes

$$F = m_a \left(V_j - V\right) \qquad (7\text{-}2)$$

The term m_a V is called ram drag by the propulsion engineer and intake momentum drag by the aircraft engineer. Either way it represents a propulsion loss caused by scooping up the air and accelerating it relative to the undisturbed condition, by carrying it along with the aircraft. As we saw earlier when discussing airframe lift and drag, air borne along by the aircraft has kinetic energy added, although the velocity relative to the aircraft is decreased. In the same way air scooped up by the intake causes drag, and the process of adding heat to accelerate the air back again to atmosphere is a way of overcoming the loss of efficiency involved. A positive thrust is only possible if the exhaust velocity is higher than the velocity of flight. In the case of a rocket engine, where the working fluid is contained wholly within the aircraft, ram drag is zero.

The engine converts chemical energy in the fuel to heat energy, the heat energy is then used to accelerate the working fluid and thus do useful work. There are, therefore, two distinct processes involved: one thermal, the other mechanical. Unfortunately all of the energy put into the final exhaust or slipstream cannot be used for propulsion. The fact that the exhaust is hot represents a heat loss, while turbulence left behind in the wake indicates inefficiency of the mechanical process as a source of lost energy.

7.1.1 Efficiency of a propulsion system

The efficiency of the overall propulsion process, η_0, is the product of the efficiency of the 'internal' thermal process, η_t, and the efficiency of the mechanical process, η_p, i.e.

$$\eta_0 = \eta_p \, \eta_t$$

= rate at which useful propulsive work is done / rate at which energy is applied to the system (7-3)

Energy and work have the same dimensions of force X distance through which it is applied. The introduction of a rate of doing work — of applying energy — transforms the statement of efficiency into a statement of power

input and output.

Typical values of overall efficiency are shown in Fig. 7.1 for four different kinds of engine.

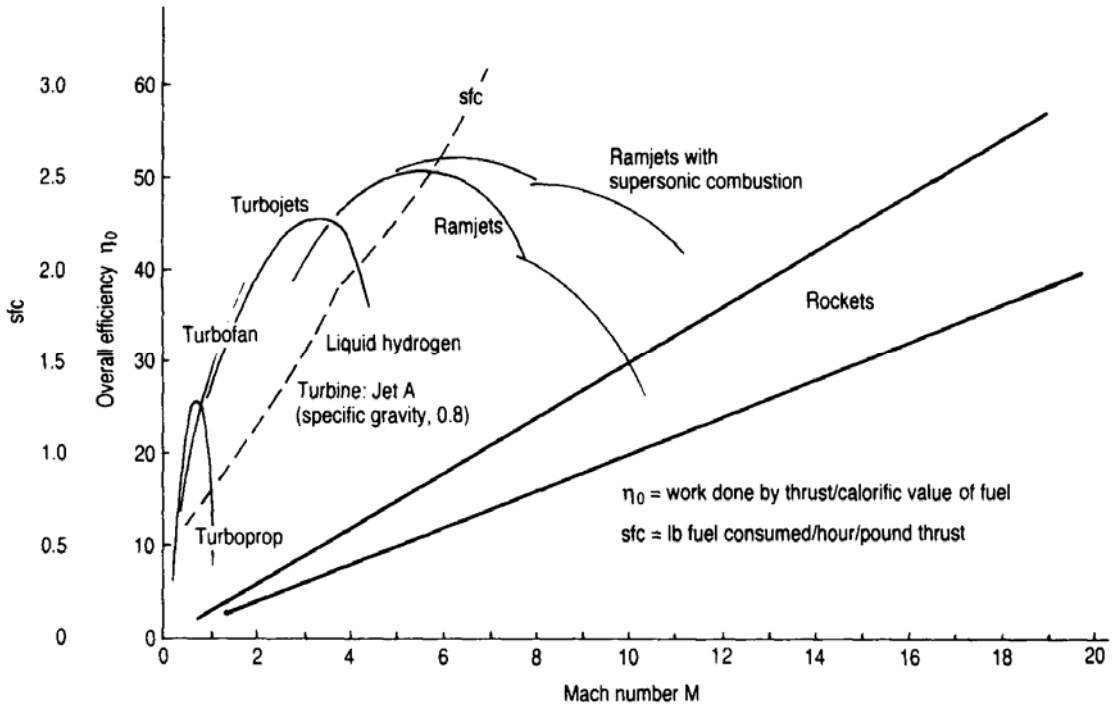

Fig. 7.1 Broad trends of overall engine efficiency, η_0, and specific fuel consumption, sfc, of different propulsion systems against Mach number, M.

The overall efficiency is also related to the propulsive term in the range equation, Eqn (4-12), for we saw there that the range depends upon obtaining a high value of

$$\frac{V}{c'} = \text{ range speed / specific fuel consumption}$$

Within the state of the art for a subsonic transport aeroplane this is approximately

$$\frac{V}{c'} = 4000\left(\eta_p\,\eta_t\right) = 4000\,\eta_0 \quad (7\text{-}4)$$

when V is given in ft/sec and thrust sfc, c', in lb/h/lb (e.g. for a turbojet at M = 0.8, V is about 800ft/sec, c' about 1.1 lb/h/lb, η_0 about 0.18, and 800/1.1 X 0.18 = 4030).

Propulsive efficiency, which is the ratio of the mechanical work involved in pushing the aeroplane through the air and the mechanical work involved in moving the working fluid through the engine, is often given in the ideal form of the Froude efficiency. At the design point thrust equals drag and, for a given flight speed V, jet velocity V_j, and mass flow m_a the thrust is given by Eqn (7-2):

$$F = m_a\left(V_j - V\right)$$

which is the expression for the rate of change of momentum, consistent units (e.g. metric or ft-lb-sec) being used throughout. The rate of performing useful work is

$$F\,V = m_a V\left(V_j - V\right)$$

but as energy is being added to the working fluid in the form of kinetic energy, the rate of increase of kinetic energy is equal to

$$0.5\,m_a\,V_j^2 - 0.5\,m_a\,V^2$$

and the ideal Froude efficiency is then given by

$$\eta_p = \text{ rate of performing useful work / rate of increase of kinetic energy}$$

$$= \frac{m_a\,V\left(V_j - V\right)}{0.5 m_a\left(V_j^2 - V^2\right)} = \frac{2V\left(V_j - V\right)}{\left(V_j - V\right)\left(V_j + V\right)}$$

i.e. $$\eta_p = \frac{2V}{\left(V_j + V\right)} \quad (7\text{-}5)$$

From Eqn (7-5) we see that an aeroplane flying at the tropopause with a TAS of 550k and a jet velocity relative to the aircraft of probably 1300k has a Froude efficiency of 55%.

Now, it may also be shown that

$$\eta_p = \frac{2}{1+\left(\frac{V_j}{V}\right)} = \frac{2}{2+\left(\frac{V_j}{V}\right)-1} = \frac{2}{2+\frac{(V_j - V)}{V}}$$

i.e. $$\eta_p = \frac{2}{2+\left(\frac{\text{thrust}}{\text{intake momentum drag}}\right)} = \frac{2}{2+\left(\frac{F}{m_a V}\right)} \qquad (7\text{-}5a)$$

We can define arbitrarily an effective propulsive efficiency with pod drag included as

$$\eta_{p'} = \eta_p\left(1-\frac{\text{pod drag}}{\text{thrust}}\right) =$$

$$= \left[\frac{2}{2+\frac{\text{thrust}}{\text{intake momentum drag}}}\right] \times \left[1-\left(\frac{\text{pod drag}}{\text{intake momentum drag}}\right)\left(\frac{\text{intake momentum drag}}{\text{thrust}}\right)\right] = \qquad (7\text{-}5b)$$

$$= \left[\frac{2}{2+\left(\frac{F}{m_a V}\right)}\right]\left[1-\left(\frac{D_{pod}}{m_a V}\right)\left(\frac{m_a V}{F}\right)\right]$$

and this term may then be used in Eqn (7-3) in place of η_p, for deriving the overall efficiency. Pod drag is of fundamental importance. If an engine has a propulsive efficiency of 65% on a test bench, but when installed in an airframe the pod drag is 10% of the intake momentum drag, then the effective propulsive efficiency will fall to 55% and the overall by something like 15%.

Thermal efficiency may be improved by improvements in the thermodynamic cycle by, for example, increasing the pressure ratio and the maximum temperature of the process, but there are practical material limitations to what may be obtained at any time. The limiting pressure ratio is around 20/1 for modern engines. With present turbojets η_t, is about 35% at M = 1.0, rising to 50% at M = 2.0, after which it begins to fall slightly, approaching 45% at M 3.0.

A propeller is used to convert the brake horsepower of an engine into propulsive power, but in so doing the brake horsepower of the engine is reduced by propeller losses. Some power is used in overcoming torque and more is lost in the slipstream, which is more usefully called ‘propwash’ to clarify its nature.

In Eqn (4-8) the power required for flight, P_e, is derived in ft-lb-sec units, while the power of an engine is stated in horsepower (equivalent shaft horsepower, eshp, in the case of a turboprop). The conversion is:

one horsepower = 550 ft lb/sec (0.746kw)

Now, in straight and level flight, where F = D:

$P_e = FV$ ft-lb/sec

and $P_e / 550 = F V / 550 =$ horsepower $= \eta P$ horsepower (7-6)

where η is the propeller efficiency and P the horsepower of the engine. This statement takes no account of altitude, the decreasing air density reducing the power output of the engine in direct proportion to $\sqrt{\sigma}$ where σ is the relative density. For most practical purposes we may write

$$\frac{P_e}{550}\sqrt{\sigma} = F V_i = \eta P \sqrt{\sigma} \qquad (7\text{-}6a)$$

When power loading is used as a measure of merit for comparing different aircraft (W_0/P) lb/hp is used, where W_0 is the all-up weight on take-off and P the sea level horsepower as stated by the engine manufacturer. It should not be confused with the theoretical power loading (W/P_e), the reciprocal of which is used in Eqns (4-7a) and (4-8).

7.2 Engine classes

While the reciprocating (piston) engine driving a propeller has been in use longer than any other class of engine, it is confined to the lighter end of the spectrum, i.e. among aeroplanes designed for operation by no more than one pilot and weighing (in general) less than 6000 lb (2730 kg). It is well understood and relatively cheap to buy and operate compared with the gas turbine, but without the same mechanical reliability. Above that weight there is increasing use of gas turbines driving propellers (turboprops) among air-taxi, commuter

and regional transport aircraft. For longer ranges and heavier loads the gas turbine in all of its variants is supreme among air-breathing units.

Figure 7.2 shows what are now both basic propeller-engine installations. For our purposes the turboprop, which combines the turbojet and propeller, is the more significant of the two.

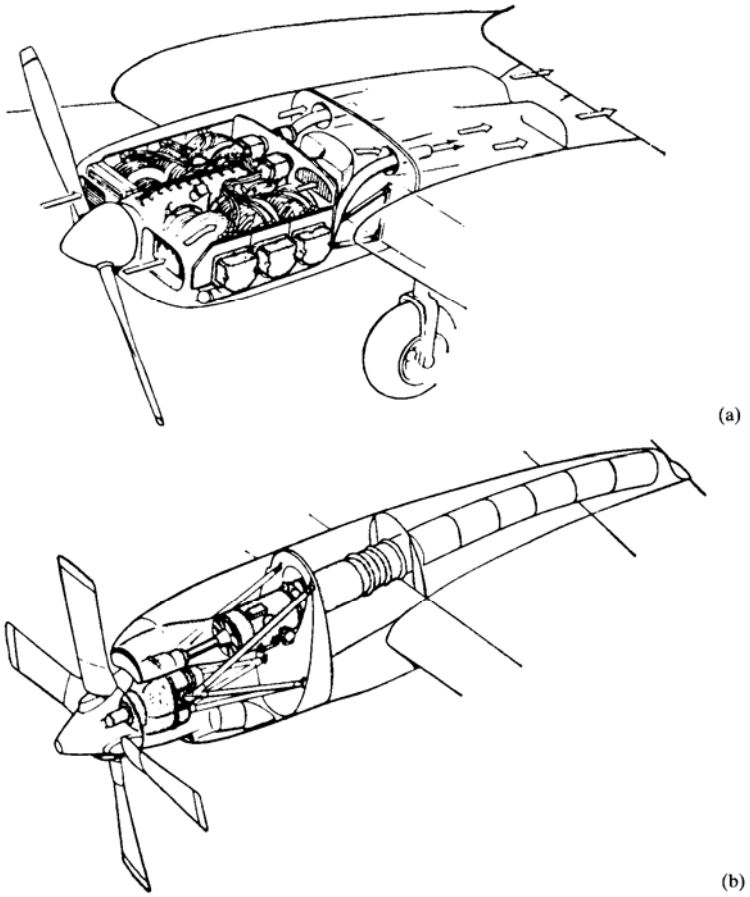

Fig. 7.2 Typical propeller—engine installations. (a) Installation of six-cylinder horizontally-opposed piston-engine in nacelle on port wing. The cooling airflow (white arrows) is augmented by the ejector-effect of the exhaust (black arrows). (Cessna 310, USA, 1953) (b) Turboprop installation in port engine nacelle. Note the small space occupied by the engine and gear-box, allowing slender cowling of such units, or adequate room for undercarriage stowage. (Lockheed 188A Electra, USA, 1957)

7.2.1 Turbojet engines

The basic gas-generating core of the jet engine is a compressor, linked by a shaft driven by a turbine which runs in the hot gas efflux from the combustion chamber(s) in which an air/fuel mixture is burnt. They are located between the compressor and turbine stages (Fig. 7.4(a)). Air is ducted to the compressor from the air intake(s). For certain types of installation a plenum chamber (a form of collector-box from which the air is then drawn by the compressor) may be added between the intake(s) and the engine. The advantage of a plenum chamber is that a water separator, or filter for sand or ice, may be incorporated to protect the jewel-like rotating mechanism of the engine in extreme operational conditions, at sea, or in the desert, Arctic and Antarctic.

After passing through the compressor, fuel is injected into the airflow, where it is then burnt, before exhausting through the turbine, to accelerate along the jet-pipe, generating thrust. Combustion is never complete. When more fuel is injected into the exhaust jet the remaining air—fuel mixture ignites to increase thrust further by reheat (UK), in the process of afterburning (USA). The modifications needed for reheat are mechanically complex, as we shall see, involving mechanical devices which increase the cross-sectional area of the jet-pipe nozzle(s), to accelerate the flow to supersonic speeds (see Eqn 5-2). One is aware of reheat when selected by a pilot on take-off, by the noise, the long flame from a tailpipe and the bright shock diamonds which form as the flow decelerates back again to locally subsonic conditions within the jet exhaust.

The basic turbojet is a thirsty engine (and much more so when reheat is fitted). In an effort to achieve flexibility of performance much ingenuity has been applied, to convert the energy in the fuel into useful work as efficiently as possible. The commonest example is the combination of a turbojet driving a propeller either outside or inside a duct (as a fan). Thus the turboprop, turbofan and now the propfan have been introduced for different purposes.

7.2.2 Turboprop

The advantage of a propeller is that thrust is produced most economically when a mass of air, M, is given the least acceleration to attain velocity V *relative to the engine*. The energy to be provided by the fuel varies directly with M and as V^2. Thus, on the face of it, the turbo-propeller unit, which moves a large mass of air relatively slowly and quietly, is the most fuel-efficient gas turbine adaptation — an example of symbiosis (see later), in which both gas generator (core engine) and propeller are mutually beneficial. Not only that, but the power/unit weight of a turboprop is superior to that of a piston-propeller engine, on top of which the fuel is the same aviation kerosene as for a turbojet. The disadvantage of a turboprop is that beyond about 300 KTAS and a propeller tip speed around M = 0.6, propeller efficiency falls rapidly, and this marks the limit for economical turboprop operations.

Propeller-driven aircraft operate at relatively low airspeeds where propeller and intake icing problems can be serious, because kinetic heating of the air is insufficient to prevent ice forming.

Apart from the need to provide adequate cooling and protection of the airframe from the effects of hot exhaust gases by efficient ducting, perhaps the most significant considerations when using propellers are disposition of the engines, and arrangement of the undercarriage. Although a large-diameter propeller with a small number of blades is more efficient than the reverse for converting the brake horsepower of an engine into tractive power, propeller size and undercarriage arrangement are mutually dependent. Propeller tips must not be too close to the ground, because of the danger of sucking up debris, or fouling obstacles, which are important considerations in bush and outback operations. Excessively long undercarriage units impose unnecessary weight penalties. Smaller ground clearances are possible with jet aircraft, but they must not be too small because of the dangers of ingesting debris, and they must allow adequate tyre and shock-absorber deflection to cope with a wide range of loading and wind conditions.

Where engines are wing-mounted there must be enough clearance without overlap between propeller tips and adjacent airframe surfaces, to avoid transmission of fatigue-provoking vibrations. In general the propeller disc should not lie in the plane of aircrew members, passengers, fuel and other service systems. In this way ice and other materials shed from the blades only causes airframe damage without personal injury or mechanical failure.

Too much clearance between propeller and fuselage of a multi-engined aircraft increases asymmetric problems (one or more engines out). The asymmetric yawing moment is proportional to the lateral offset of the engine from the centre of gravity. The larger the moment the bigger the required fin and rudder areas, or the higher the approach and landing speeds. Generally speaking, high-winged propeller-driven aircraft need more fin and rudder area to cope with asymmetric moments than low, because wing—body junctions and other sources of friction and turbulence have more severe wake effects upon dynamic pressure recovery at the tail than when wing—body and other junctions are less in line. A number of heavy, high-winged, twin-fin piston-propeller transport aircraft of the 1940s onwards were forced to grow third fin surfaces for this reason.

A propeller is treated theoretically as an 'actuator disc', a device which actively imparts a change of momentum to the airflow passing through it. The greatest thrust from a propeller is achieved when the airflow relative to the engine is zero. When the aeroplane is at rest in still air the propeller thrust is a maximum. It follows that a pusher propeller, working in the sluggish wake of air slowed by friction and displacement by fuselage surfaces, wing junctions and tail surfaces, produces more thrust than a tractor propeller, located in front of the wings or the nose. The propwash behind a tractor propeller in flight loses momentum as it flows aft over the skin, reducing thrust and increasing drag by friction and displacement. The rate of climb, which depends upon excess power available at a given airspeed, is higher for a given horsepower and propeller efficiency with a rear-mounted engine than one in front.

However, a rear-mounted pusher-propeller is noisier than one in front, because the blades encounter chopped up and lumpy air, flowing aft in the wake with different velocities, causing vibrations and sound waves of different frequencies from the propeller blades.

Propeller ‘P’ effects (or ‘P’ factor)

Propellers are more complicated than they at first appear, generating what are called ‘P’-effects. These adversely affect flying qualities and pilot handling:

(1) *Asymmetric blade effect*: when the propeller shaft is inclined to the relative airflow the blades over one half of the disc are advancing with larger angles of attack than those over the other half. The result is uneven lift across the diameter of the propeller, which produces a pitching or yawing couple.
(2) *Rigidity*: in that the propeller, like a flywheel, tries to remain fixed in space.
(3) Precession: again like a flywheel, if a couple is applied to tilt the plane of rotation, the resulting motion is precessed 90^0 onwards in the direction of rotation.
(4) *Pitching moment*: is introduced when a propeller which is mounted ahead of or behind the centre of gravity, is inclined to the flight path. When tilted up or down it generates components of thrust in the pitching plane. When yawed to one side or the other, thrust components affect the aircraft directionally.

(5) *Propwash*: moves as a spiraling helix, like a corkscrew, in the same direction of rotation as the propeller. The wash strikes the body, wings and tail surfaces at different angles of attack, affecting yaw especially. For example, a right-hand tractor propeller (rotating right as viewed by the pilot) causes propwash from the left at the tail, inducing a fin side force to the right, which tends to yaw the nose to the left. The pilot counters this by applying a touch of right rudder.

(6) *Torque*: is the opposite reaction to the engine turning the propeller, which tries to stand still while turning the aeroplane around it; thus a right-hand propeller would cause the aeroplane to attempt to rotate to the left. Counter-rotating propellers (contra-props) are needed to cope with torque effects which are too powerful for the authority of the flying controls (Fig. 7.3(a)). Opposite-handing of the propellers of multi-engined aircraft is another, slightly cheaper, way of countering torque effects (Fig. 7.3(b) and (c)).

7.2.3 Turbofan

For higher airspeeds with improved fuel efficiency the turbofan engine is now widely used and examples are shown in Fig. 7.4(b)—(d). It is also called a fan-jet or a bypass engine; it has a turbojet core, the shafting of which drives a larger-diameter fan within a duct. A mass of larger-diameter air is accelerated rearwards by the fan, to bypass the main engine core. A turbofan is described as having a given bypass ratio, defined as the ratio of the total mass swallowed to that passing through the combustion chambers. Thus, a turbofan engine in the 40 000 lb static thrust class might have a total mass flow at sea level of 1300 lb/sec and a bypass ratio of 8:1, achieved by burning 165 lb/sec of air in the combustion chambers.

The advantage of the turbofan is that it has a propulsive efficiency comparable with the turboprop, exceeding that of the pure jet engine. A medium bypass ratio turbofan passes all of the air through a low-pressure compressor before a percentage is ducted through the high pressure compressor, the combustion chambers and turbines. The remainder is mixed downstream with the exhaust, after it has passed through the turbines. As the turbofan handles a greater mass flow than the turbojet, it is possible to reduce the thrust specific fuel consumption and fuel carried for a given mission. One manufacturer has claimed typical sfc around 15% lower than that of an equivalent turbojet, resulting in an aircraft 20 - 30% lighter, burning 30 - 40% less fuel for a given range and cruising speed.

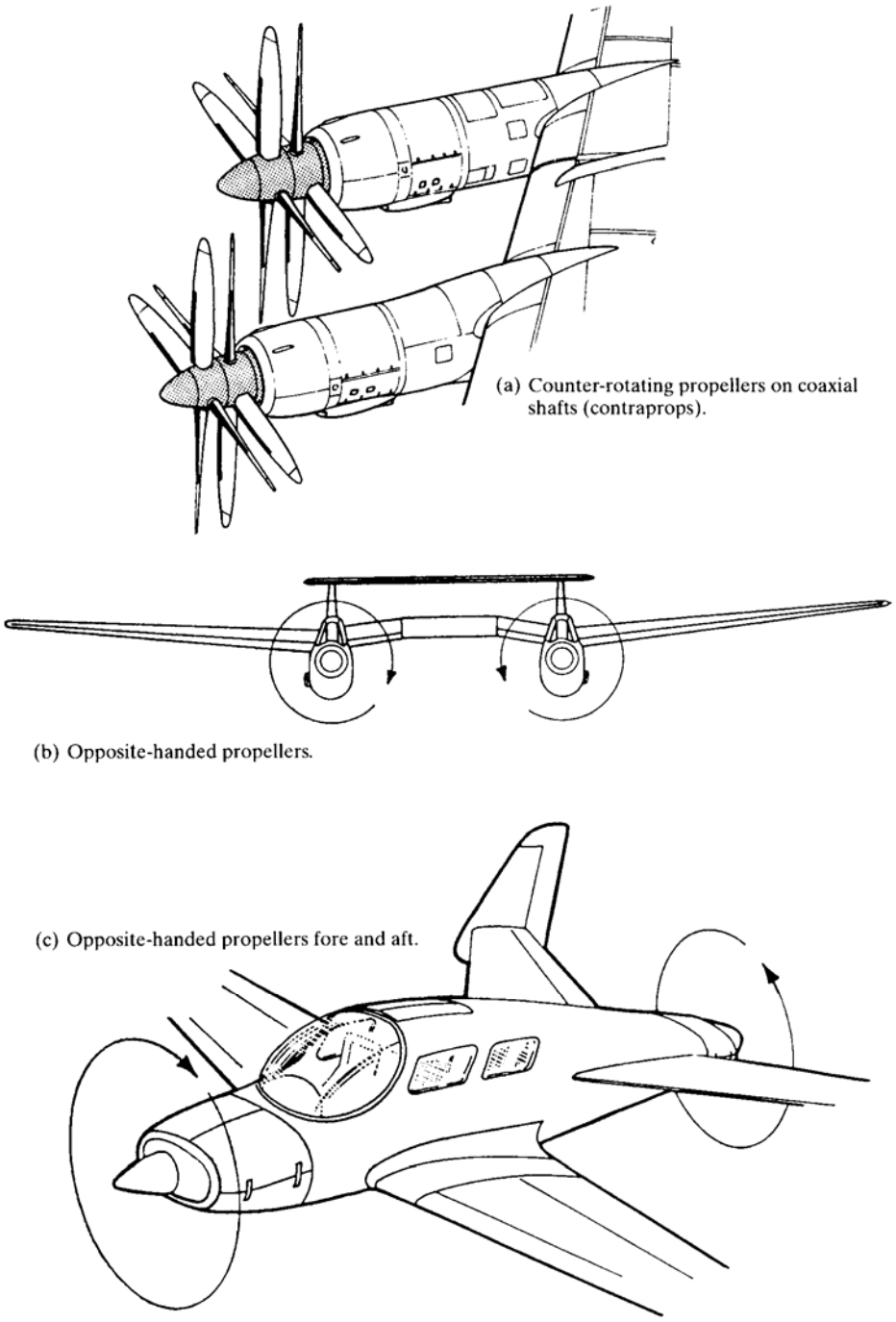

Fig. 7.3 Torque counteraction using opposite-handed propellers.

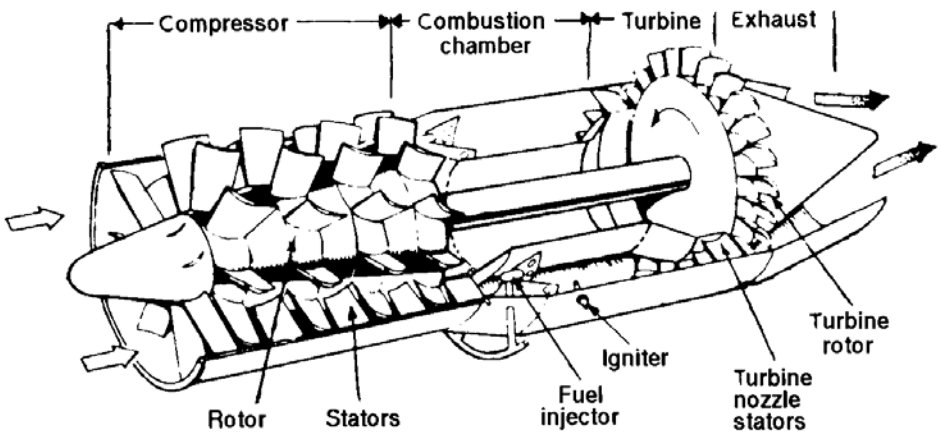

Fig. 7.4 (a) Diagram showing the principal parts of a gas turbine.

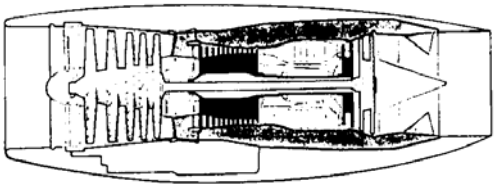

(b) Medium bypass ratio.

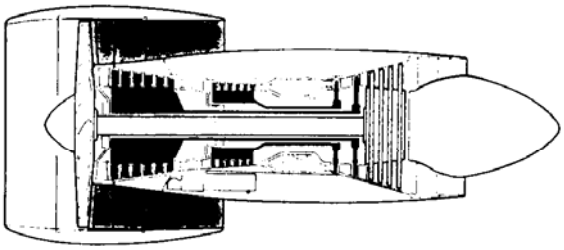

(c) High bypass ratio.

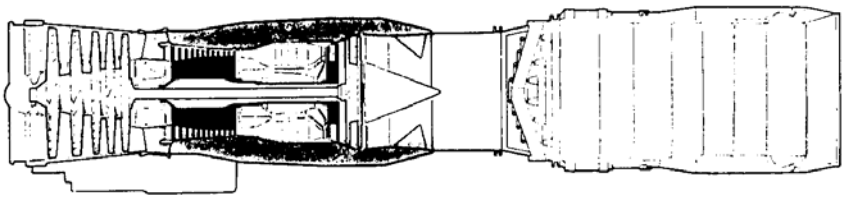

(d) Medium bypass ratio with reheat.

Fig. 7.4 (b)—(d) Turbofan variants.

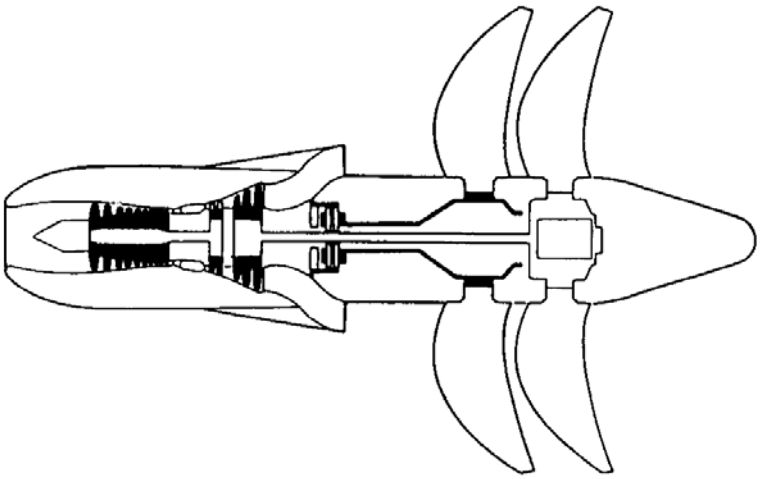

Fig. 7.4 (e) The advanced propfan: high performance, good specific fuel consumption, supercritical rotor blades - noise is a problem.

A turbofan with a high bypass ratio has a short, large-diameter cowl. The air is not mixed with the exhaust downstream of the turbines. So, handling a large quantity of unburnt air, it has a considerable scope for reheat. The percentage increase in thrust due to reheat is much higher than a turbojet, because the bypass air is still oxygen rich. At the tropopause, 36000ft and at M = 2.0, the basic turbojet thrust is about 1/3rd of the sea level static thrust. However, a turbofan with a bypass ratio of 1.0 would, with reheat, increase the thrust fourfold, to 1.33 times the sea level static thrust. Thus, while the turbofan can improve subsonic cruise performance by using even higher bypass ratios, it retains a 'supersonic dash' capability.

7.2.4 Propfan

Depending upon the price of fuel in the future, the advanced ducted turbofan engine, with its low specific fuel consumption, has a competitor in the experimental propfan engine (Fig. 7.4(e)). The diagram shows this to have a gas-generating turbojet core, with the exhaust passing through a separate turbine, which in turn drives counter-rotating open rotors. The blades, being scimitar-shaped, are aerodynamically equivalent to swept wing surfaces, to handle cruise Mach numbers higher than those for which the straight blades of a conventional turboprop are designed.

Demonstrated in flight in the 1980s the propfan is still under development; while it promises high

propulsive efficiency and saves the weight of a duct, it has a heavy gearbox and rotor drive. The rotors are larger in diameter than the ducting of a turbofan, which tends to constrain their mounting to pylons protruding from the rear fuselage. Whereas the ducting around a turbofan usefully absorbs some of the more offensive noise frequencies, reducing vibrations, the rotor tip speeds of the propfan are high, and special sound insulation is needed for passengers, bringing attendant penalties in weight.

7.2.5 Hydrocarbon fuels and liquid hydrogen, LH_2

Hydrocarbons are one of a large class of organic compounds containing only carbon and hydrogen, commonly found in petroleum, natural gas and coal. Oil, when heated ('cracked') in a refinery splits into various forms, from the lightest gasolene to heavy tar. Of the fuels used in aviation the heaviest, for turbines, called Jet 'A' has a specific gravity of 0/8. For piston engines AVGAS is used, which has a specific gravity of 0.72.

Sources of oil tend to be in areas of the world that are highly sensitive politically. The West as the major user is vulnerable to oil supplies being cut for many reasons, including war, or through the price of oil being forced artificially high. Accessible reserves are expected to run out between 2020 and 2040. Other fuels can be made from other fossil sources: tar, shale and coal, but production costs are vastly expensive.

As an alternative, studies are being conducted by, among others, Daimler-Benz Aerospace (DASA) together with German and Russian partners in research, to investigate the possibility of using LH_2, liquid hydrogen power, by cooling the gas cryogenically to below -235^{0}C, enabling it to be carried in frozen form. One litre of LH_2 is equal to 800 liters of H_2 gas. When hydrogen burns it combines with oxygen to produce water, while releasing 3 times more energy than the same mass of kerosene. It also produces less pollution than kerosene, which breaks down into carbon dioxide (the 'greenhouse gas' CO_2), nitrous oxide and many water pollutants, contributing to the greenhouse effect and destruction of the ozone layer (which protects us from damaging ultra-violet radiation). Carbon dioxide is expected by DASA to remain in the atmosphere as an exhaust product for about 100 years.

While the exhaust from liquid hydrogen contains water, which leaves water vapour and ice crystals in the atmosphere, the effects of this are said to be less damaging than kerosene products, yet all is not proven as this is written.

Hydrogen-powered aeroplanes would carry the frozen gas in refrigerated tanks above their fuselages, markedly altering their shapes and proportions. Special insulation would be needed. However, their specific air ranges would be greatly increased for a comparable weight of fuel carried.

As far as risk is concerned, there would be less to passengers than from gasolene or kerosene. Hydrogen burns upwards and at such a low temperature that the metal skin of the fuselage would provide protection. The main danger, it is said, would come from a ruptured tank above the cabin, freezing passengers in super-cooled hydrogen. When hydrogen gas was used in airships it had, with one exception — the Hindenburg in 1937 (from which the majority escaped) — an excellent safety record. Around 50,000 passengers were carried without a fatality.

7.2.6 Rockets and ramjets

Rocket engines and ramjets are highly specialized. When this book was in its first edition the rocket and the air-breathing ramjet appeared to have operational possibilities for target-defence interceptors. Over the decades since the 1960s their lines of development withered, except for rare experimental aircraft, missiles, and rockets for space programs.

7.2.7 Solar power

The threat of world oil resources running out in the foreseeable future leads to research into applications of solar energy, converted by means of arrays of photo-voltaic cells into electric power-driven propellers. Such cells are byproducts of space research and technology, and they are expensive. Specific weight is high, but the principle has been shown to work with at least 3 ultra-light aircraft, at the time of writing one of these is in the UK and two are in the USA. Research and proof-of-concept racing with lightweight solar-powered cars has been conducted more recently, notably in Australia.

There is a range of semi-conductors capable of transforming solar energy into power. Silicon is about 15% efficient, Gallium Arsenide 11%, and Cadmium Sulphide 8% efficient. Organic cells might be more efficient, but they are in the distant future. Typical silicon cells are about 0.8in square, 0.4 - 0.5 in thick, and weigh 0.62 X 10^{3}lb (2cm square X 10 - 12mm, weighing 0.28 g). They once cost between $75 and $200 per watt at 1974 prices.

Bright sunlight in the tropics has an energy equivalent to 0.124 BHP/ft^2 (1 kW/m^2). A power unit with a

propeller having an efficiency of 80% would produce about 0.015 BHP/ft^2 (0.12kW/m^2); this means that 200ft^2 of wing area covered with silicon cells would produce about 3 BHP for a weight of 28 lb, less the weight of the engine and propeller. The specific weight of such a bank of cells would be around 9.33lb/BHP (5.7 kg/kW).

Power produced varies linearly with incident sunlight. There is marked degradation with latitude and the amount of cloud. On a cloudless day in a temperate latitude, at 53^{0}N, say, we might expect solar input and propulsive output at around 75% of these values.

7.3 Jet-engine installation

Figure 7.4(a) showed a cut-away view of a typical gas-turbine engine. The aim of engine installation design is to house such a unit within a low-drag cowling, accessible to servicing, with the shortest, straightest intake and exhaust ducting possible. Ducting introduces frictional losses, while curvature that changes the direction of the relative airflow suffers a reaction to the change of momentum, called momentum drag.

At subsonic speeds the intake and exhaust system is little more than two simple pipes. The intake consists of a hole taking ram air to the engine compressor, this is called a pitot intake. The exhaust gases are ducted away to the propelling nozzle down a (usually) cylindrical jet-pipe. For flight at supersonic speeds considerable variable geometry is required in both intake and exhaust systems to ensure that the compression of the swallowed air and its expansion back to ambient conditions, when finished with, takes place with the greatest efficiency. However, for stealth purposes the exhaust nozzle can be flattened (Fig. 6.27(a)).

In order that an engine may be kept as light as possible compressors are designed to operate on air reaching the first stage of blading (referred to as the compressor face) at a relative airspeed of M = 0.4, or thereabouts. It follows that an aeroplane flying at speeds in excess of M = 0.4 must have the relative airflow decelerated between the intake and the compressor face, i.e. the air is gathered up and accelerated relative to its undisturbed position in space. The function of the compressor is to increase the pressure of the swallowed air by a process of diffusion, before fuel is mixed with it in the combustion chambers. Burning the air— fuel mixture increases the thermal energy of the mass. The thermal energy is converted to mechanical work by expanding the exhaust gases rearwards: decreasing their pressure while increasing their relative velocity on the way to the propelling nozzle. In fact the exhaust velocity is higher than the relative airspeed, but the pressure of the exhaust gas is nearly that of the surrounding atmosphere on leaving the nozzle. With a turbojet the exhaust gases are expanded through a turbine that transmits mechanical work, through shafting, to the compressor.

At high speeds the temperature of the air is raised so much during compression by the intake and diffusion in the intake ducting that the compressor (and turbine) is redundant. An engine without compressor and turbine is called an aerothermodynamic duct, or ramjet for short. Although there has been much early research into ramjets, they have not been developed except as experimental units, with some missile applications. They are fuel-hungry and are useful only over relatively short ranges and high Mach numbers, as shown in Fig. 7.1.

The whole process of compressing and expanding the air in its passage through a turbojet installation is shown in Fig. 7.5, which represents the very general conditions in flight at M = 2.0. The pressure ratio through the installation is plotted beneath the section, on which is shown the relative airflow, temperature, and thrust increments as a percentage of the net thrust.

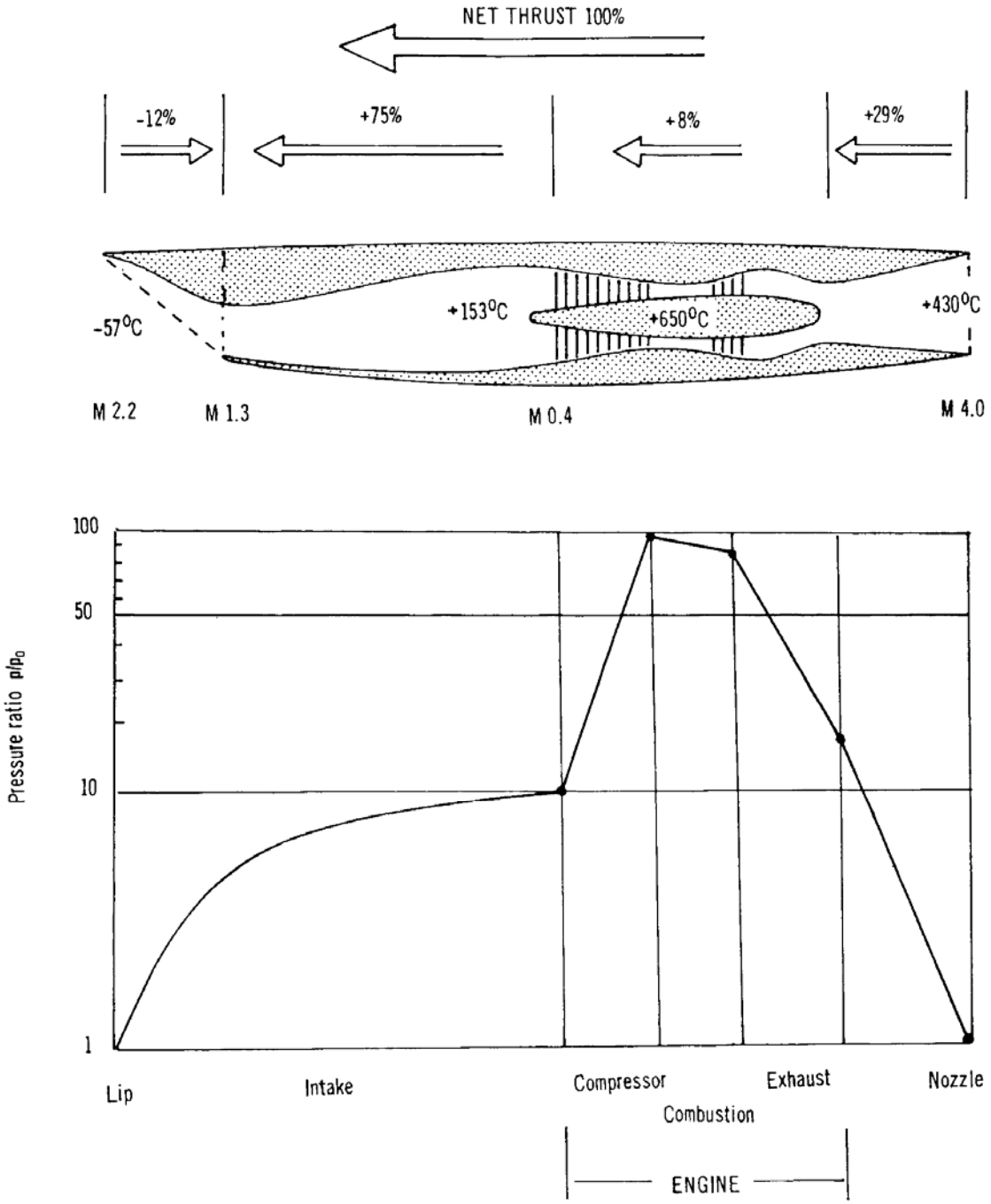

Fig. 7.5 Typical conditions through a supersonic engine installation in flight at M = 2.2.

7.3.1 Intake geometry

The function of the air intake is to deliver the correct mass flow of air to the compressor face to generate the required thrust. The design point for the intake is the cruising speed for a long-range aeroplane. A short-endurance fighter on the other hand may well have the design point of the intake in the transonic regime, where high thrust is needed to accelerate through the transonic drag-rise.

An allied function of the intake is to deliver an even distribution of air across the compressor face over a wide range of angles of attack. If the airflow is uneven then the compressor blades may stall and cause surging, a phenomenon varying between an unpleasant rumbling and a sharp report, followed by flame extinction.

In supersonic flight the deceleration in the relative airflow from the intake lip to M = 0.4 at the compressor face must take place through one or more shock waves. It will be remembered that supersonic compression takes place when air is squeezed into a smaller space; such compression is achieved by the presence of a variable spiked centre-body set in an axisymmetric intake, or by a wedge when an intake is rectangular. In Fig. 7.5 the wedge protrudes downwards to form a throat. An oblique shock is thrown from the leading edge of the wedge to impinge upon the lower lip. A normal shock lies between the lower lip and the wedge, directly across the throat.

The efficiency of an intake is measured by the pressure recovery at the compressor face of that part of the total static pressure head at the intake, p_o, expressed in terms of p_1/p_o. The more supersonic the

aeroplane the greater the number of shocks needed to achieve smooth compression and high efficiency; this is shown in Fig. 7.6, which applies broadly to both axisymmetric and rectangular intakes.

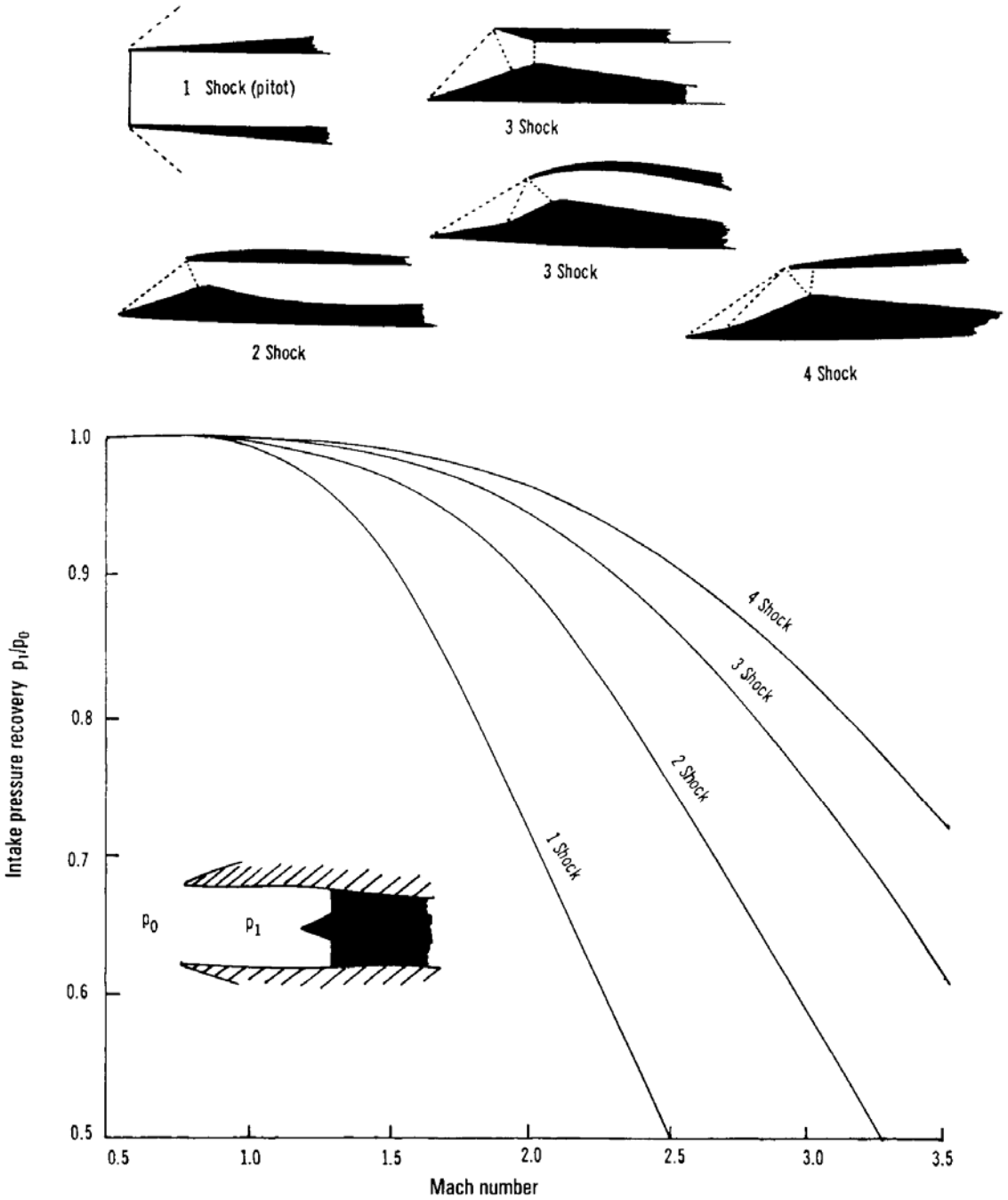

Fig. 7.6 Intake geometry and pressure recovery.

It follows that for off-design operation the Mach-angle of a shock must be controllable and to achieve this the centre-body must move in some way, so that the shock can be arranged to impinge upon the intake lip. If a shock does not impinge upon the lip, but lies outside it, pressure escapes and reduces the recovery at the compressor. The Mach-angle of a shock may be altered by moving a spiked centre-body fore and aft to alter the angle subtended at the intake lip, or by altering the angle of a wedge.

Several air intakes are shown in Fig. 7.7. Note that in two examples there is a channel formed by a gap between the intake and the fuselage. The gap is a boundary-layer bleed for draining away the stagnating boundary layer that would otherwise reduce the pressure recovery and distribution of rain air across the compressor face.

It should be noted that the conical centre-body is used conveniently on many fighter aircraft as a housing for attack and fire-control radar.

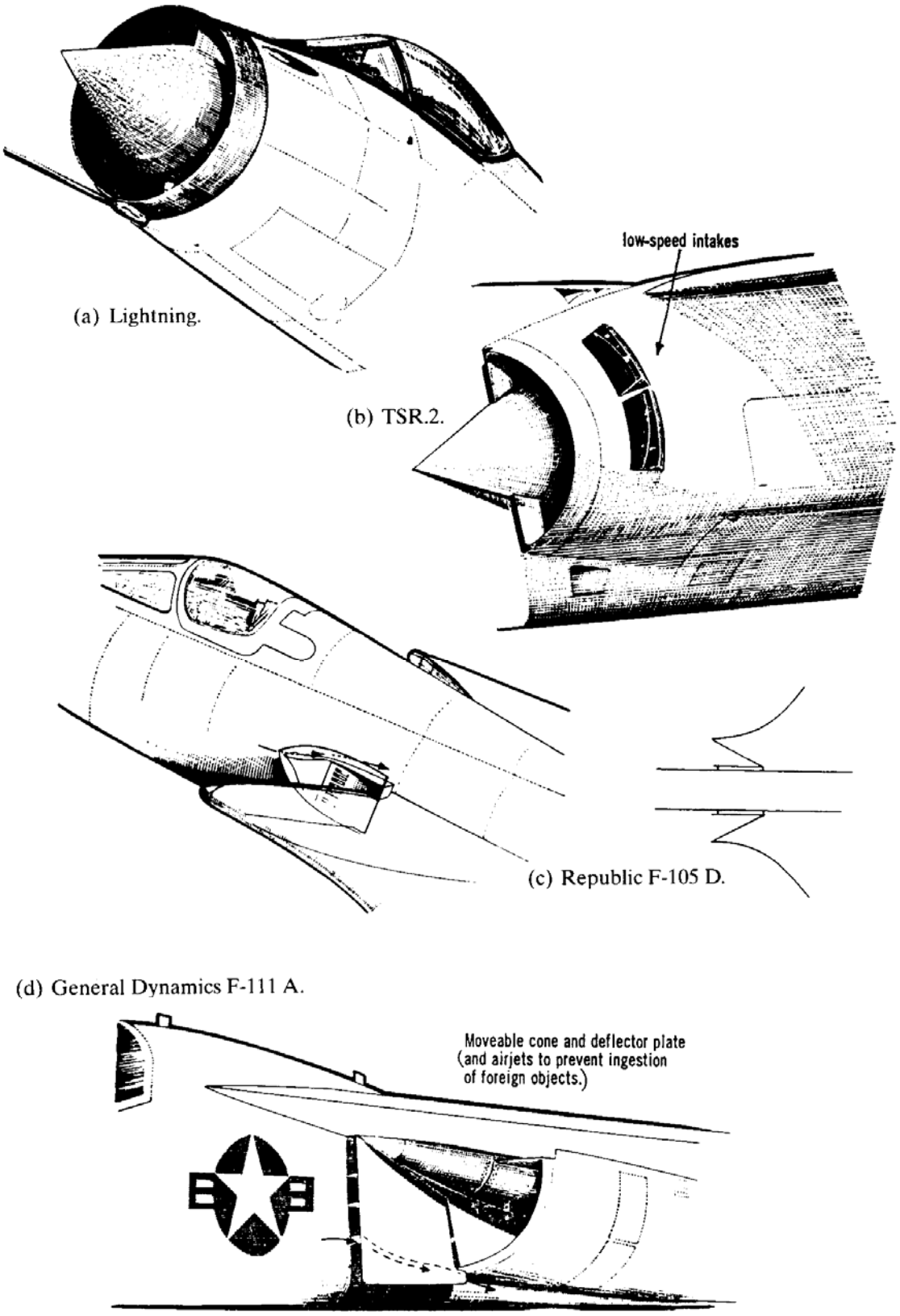

Fig. 7.7 Various intakes.

(picture)
Plate 7-1 (a) BAe Sea Harrier F/A Mk 2 VSTOL fighter, reconnaissance and attack aircraft. Vortex-generators are just visible along the crest of the upper surface of the wing, which has three leading-edge boundary-layer fences on each side (see also Appendix F). (b) By comparison and differences are often subtle (including the shape of the nose) — the Harrier GR.7 has leading-edge extensions (LEX) at the wing-root junction where it joins the bulky fuselage air intakes. A LEX, like the highly swept-wing leading edge of Concorde, generates a powerful lifting vortex at large angles of attack. Their local downwash helps to preserve the flow aft and over the tail surfaces, preventing premature separation and consequent reduction in tail authority. They also boost the otherwise declining spanwise lift-distribution where wings and body meet. This plate shows clearly the faired outrigger wheels, which balance the aeroplane when standing on its tandem nose and mainwheel

undercarriage.

7.3.2 Propelling nozzles

The faster an aircraft flies the greater the difference between the relative airspeeds of the flow through the combustion chambers of the engine and the undisturbed ambient conditions outside. Hence, the more rapid is the required acceleration of the burnt gases through the engine if they are to be exhausted back to ambient conditions with the minimum loss of propulsive efficiency.

If flight is at subsonic speed then the expansion of the gases back to ambient conditions takes place with a change of speed less than M = 1.0. It follows, therefore, that to achieve such a change of airspeed the acceleration must take place through a convergent duct.

In supersonic flight, however, the exhaust must be accelerated through a change of airspeed greater than M = 1.0. As we saw earlier, a supersonic acceleration takes place through a divergent duct. If the aeroplane is flying a little more than M = 1.0, the required expansion of the exhaust can be achieved through a duct of constant cross-sectional area.

In order to attain optimum performance over a wide range of airspeeds it is necessary to fit supersonic aeroplanes with variable nozzles. The nozzle is formed by an eyelid that can be closed down to a convergent form for subsonic flight, yet which can be opened up to divergent form for supersonic flight. Such a nozzle having convergent-divergent capability, called a con-di nozzle, has many forms, some of which are shown in Fig 7 8 More elaborate nozzles for the added purpose of thrust-vectoring, but with the same properties as those shown earlier in Fig. 7.8, are shown in the same figure.

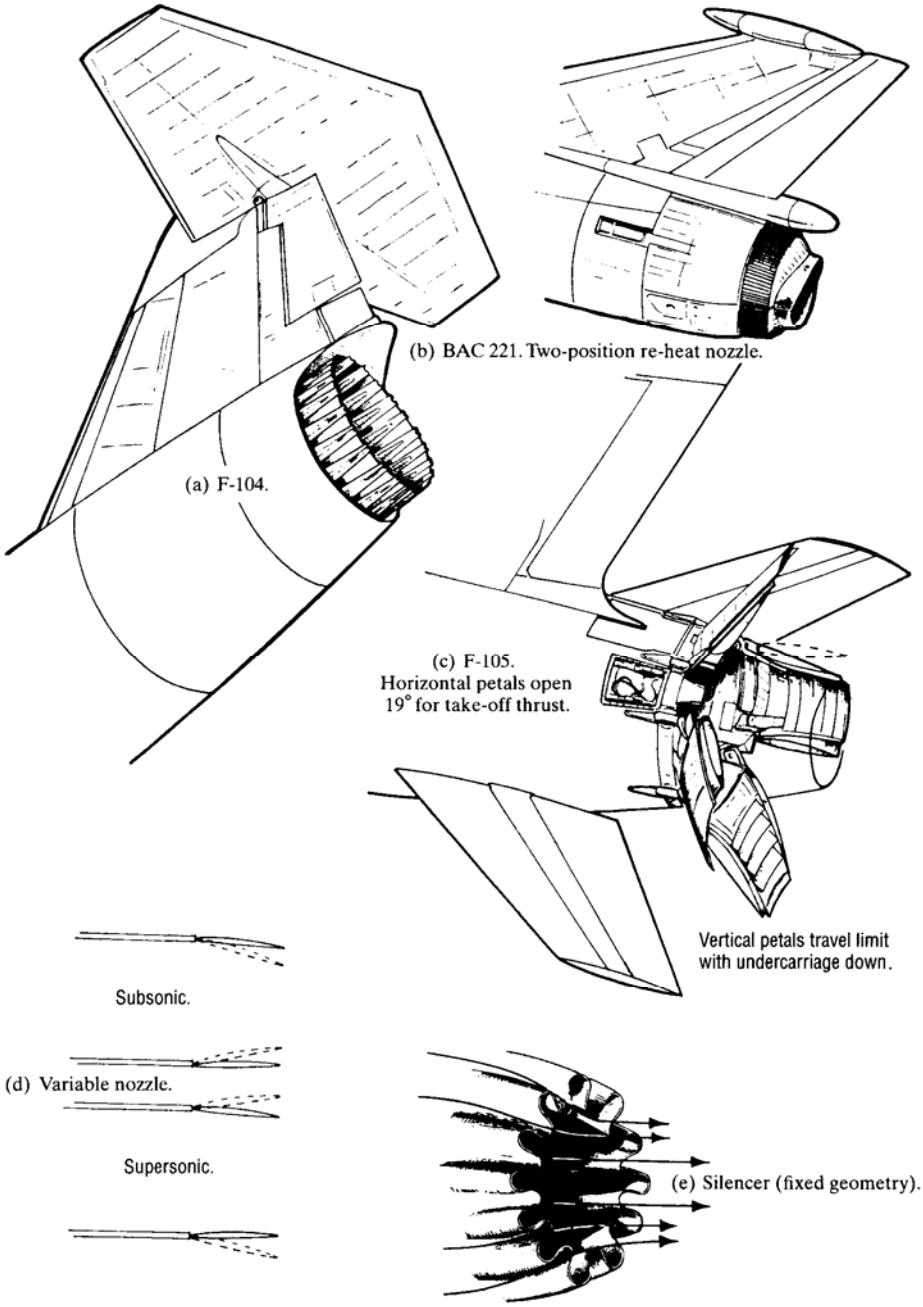

Fig. 7.8 Various nozzles.

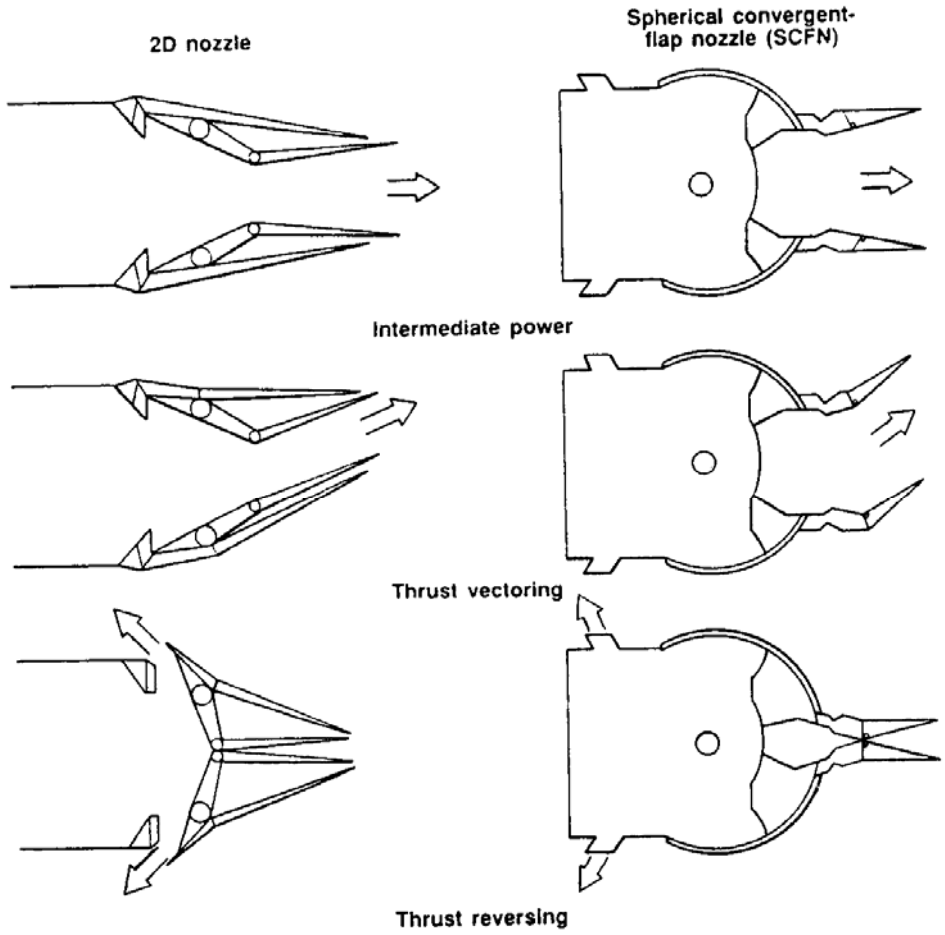

(f) Two-dimensional and spherical convergent-flap nozzles.

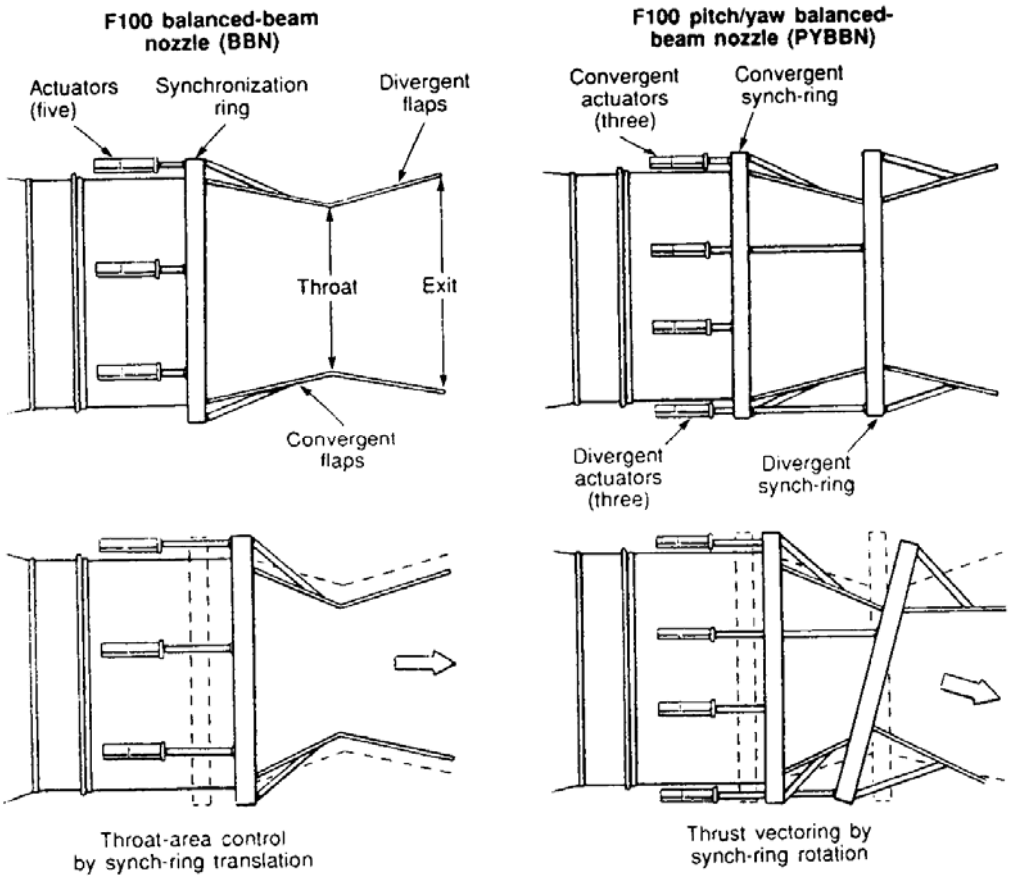

(g) Balanced-beam and pitch/yaw balanced-beam nozzles.

Fig. 7.8 (continued).

Reheat or afterburning

The thrust of a turbojet is frequently augmented by burning additional fuel in the jet-pipe, thus utilizing unburnt air. The diameter of the jet-pipe is increased over the reheat section, which terminates at the propelling nozzle. The nozzle eyelid is opened when reheat is used, to cause a rapid supersonic acceleration of the exhaust and to cope with the lower density (increased volume) of the superheated mass flow. Thrust augmentation comes with the increased rate of change of momentum of the exhaust.

Thrust reversal

Thrust reversal is a commonplace technique used when on the ground to reduce the energy input to the wheel brakes. All deflectors incorporate cascades — curved blades or plates — which turn the exhaust gases through more than 90^0. The retarding force is, therefore, merely momentum drag caused by a violent change in direction of the exhaust. In some installations the cascades are set in the side of the jet-pipe and a central deflector in the core of the pipe is then opened to split the jet, causing it to impinge upon the cascades, which turn the gases through the required angle. Another form is to move two large curved blades, of bucket shape, from housings at the side of the jet-pipe into the exhaust stream. As the buckets close the exhaust is forced away through slots uncovered in the sides of the jet-pipe.

Thrust reversal by jet deflection is only one aspect of the use of thrust for more than propulsion. Clearly, vectored thrust can be used on take-off and landing, as we shall see. A device from Rolls-Royce is the switch-in deflector based upon a thrust-reverser designed by that company. The thrust-switching device consists of a pair of clamshell doors (or eyelids) which form part of the jet-pipe wall. When deflected thrust is required the eyelids are swung rearwards to blank off the nozzle, at the same time uncovering two apertures in the jet-pipe wall. The apertures lead to cascades, mounted in nozzles that can be rotated by the pilot. In that way the thrust can be deflected in any direction from forward to aft, thereby generating an infinitely variable range of lift, thrust and drag components.

Silencing

Jet noise on take-off and landing is a considerable problem, especially as many cities are served by airfields set in or near built-up areas. Noise is a function of the jet's shear velocity and is roughly proportional to $(V_j - V)^7$. Noise suppression is achieved by fitting special nozzles that mix ambient air into the free surface of the jet, thereby weakening the sharp surface of discontinuity between the jet and the relatively undisturbed ambient air. Corrugated nozzles of various kinds are used for such mixing, a typical example being shown in Fig. 7.8(e). What are now called 'hushkits' are increasingly provided for older types of jet aeroplanes to boost resale values.

7.4 Installation problems

The purpose of an aircraft dictates the size and number of engines required. Aircraft of short duration usually have compact internal payloads and modest fuel requirements, additional fuel being carried in external overload tanks. In the event they are usually small and lack room for installing engines within the wings. Jet engines are usually fuselage-mounted. Wing tips are an attractive position for podded units, from the point of view of providing bending relief (lighter wing structure) and aerodynamic endplate effects (reducing the strength of the tip vortices and, hence, lift-dependent drag) but the position poses severe problems in asymmetric flight.

Long-range aircraft are large and heavy and invariably have several wing-mounted units. For two and three-engined jet transport aeroplanes it is now the practice to mount them around the rear fuselage. They are quieter for passengers but are balanced by longer noses and can require larger fin surfaces.

7.4.1 Rear-mounted engines

Broadly speaking the arguments for rear-mounted engines are:

(a) Aerodynamic cleanliness of wings.
(b) Small asymmetric moments.
(c) Reduced cabin noise levels.

Against which advantages must be leveled the disadvantages of:

(d) Heavier wing structures to compensate for lost bending relief, and anti-flutter mass-balance function of podded engines.
(e) Centers of gravity lying further aft, necessitating larger and heavier tail surfaces to provide adequate stability and control. However, it should be noted that horizontally mounted nacelles act as lifting bodies and as such they augment the stabilizing moment of the tailplane, so that not quite such a large tailplane would be needed as might at first be thought.
(f) Proneness of configurations with long slender forebodies, wings set well aft and high-mounted tailplanes to problems associated with the deep stall, or superstall.
(g) The possibility that in the event of a crash hot, heavy engines may be mixed with passengers and cargo.

The downwash behind the wings changes with aircraft attitude and thus reduces the angle of attack at the intakes, and it is argued by proponents that rear-mounted engines maintain high efficiencies throughout the flight envelope. Podded engines and other engines with intakes forward of the wings suffer larger changes of angle of attack with attitude. The forward and aft positions are compared in Fig. 7.9.

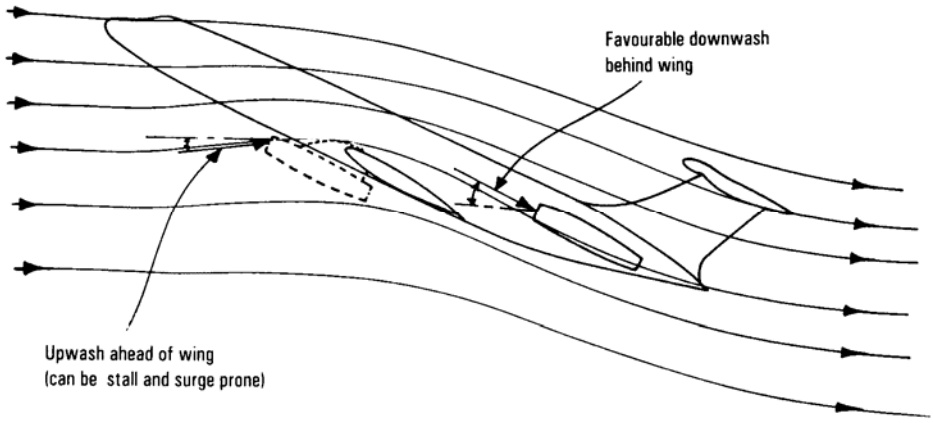

Fig. 7.9 Flow pattern before and behind wing, showing angle of attack at intake of podded (dotted) and rear-mounted engine.

7.4.2 Wing-mounted pods and engine-boxes

There are two basic wing-mounted installations: one with engines buried within the wing structure, the other being the suspension of engines in pods. Engines in pods, traditionally favored in the USA, are used in the majority of aircraft.

Related to the podded unit is the externally mounted engine-box, a feature of many projected supersonic transports. The North American B-70, shown in Fig. 6.10, was the first aeroplane to fly with boxed units.

To achieve some perspective in the arguments for each installation consider the area of intake compared with aircraft frontal area needed to meet the engine requirements at different level speeds. Figure 7.10, which is taken from a paper by Nicholson (Royal Aircraft Establishment), shows diagrammatically a front elevation of an aircraft and the minimum intake area needed for level flight. Clearly, around M = 1.0 both engine and intake may be incorporated in either a buried or podded installation. As the design speed is increased the intake grows larger, so large in fact that it must appear outside the main airframe. Therefore, boxed and podded units become the natural installations for highly supersonic flight.

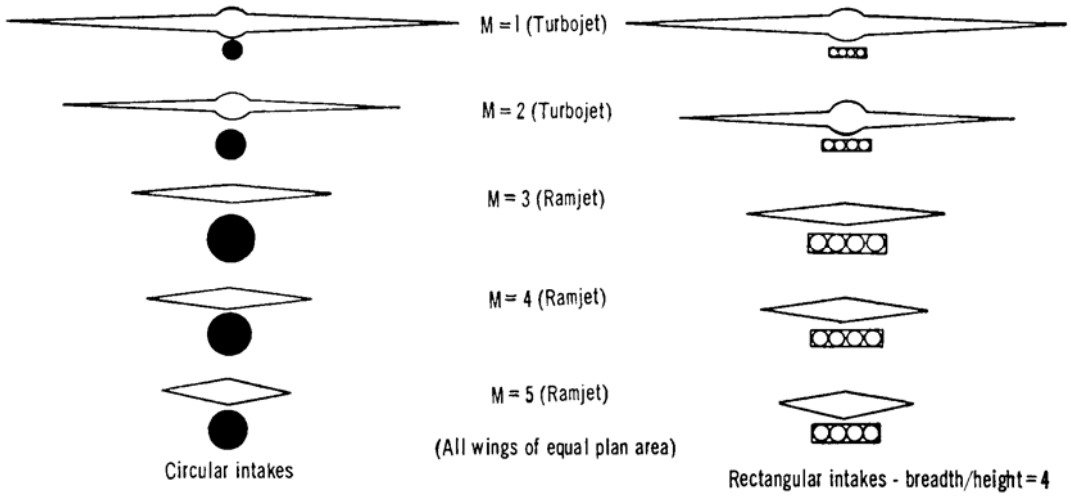

Fig. 7.10 Comparison of intake and aircraft frontal area with increasing design level speed.

Podded units can be positioned for maximum bending relief; to produce favorable area distributions; and as dynamic mass-balances to counter destructive cyclic fluttering of thin wing surfaces. The engines, being separated, are less prone to sympathetic failures of more than one unit.

The installed drag of pods is higher than with buried units, although they can be positioned so as to decrease the total drag of an aeroplane. Thinner wings can be used, but at subsonic speeds the interference between relative airflows round the nacelle and wing surfaces is such a large part of the total drag that pods have to be displaced well away from the supporting wing. When pods are low-slung they often introduce ground-clearance problems: a mishandled crosswind landing resulting in a unit being left behind on the runway.

Boxes may be mounted above or below wings, usually near the trailing edge where they create the least unfavorable interference.

Low-mounted boxes attain the highest pressure recoveries, because the intakes work in the region of relatively high pressure beneath the wings. Also, the isobars beneath the wings are in a less critical state than those above, and interference between the engine-box and wing is likely to be the least unfavorable. However, intakes beneath the wings are more prone to the risk of debris ingestion.

Boxes mounted on the upper wing surfaces have been suggested for several earlier SST projects, but all appear to have been shelved at the time of writing. It should be noted that the upper surfaces of the wings of an aircraft with a slender planform are worth considering from the aerodynamic point of view of engine mounting. Although pressures are generally lower than those over the lower surfaces, the leading-edge vortices sweep a healthy supply of ram air down towards the trailing edges up to quite large angles of attack, as shown in Fig. 6.8(b). On the other hand, engines mounted above the wings are not as readily accessible for servicing as those below.

7.4.3 Buried units

Engines mounted within the wings are the oldest installations for jet aeroplanes discussed so far. The arrangement was convenient aerodynamically because the aeroplanes being designed in the 1940s employed sections with much larger thickness ratios than are now used.

Failures of engines buried inside wings are more likely to affect the surrounding structure when, for example, turbine-blades are shed. Engine changing can be more of a problem too. The buried installation is perhaps the cleanest of all aerodynamically.

Several engine installations are shown in Fig. 7.11, in which the maritime Comet shown in Fig. 7.11(d) is a project utilizing a number of well-tried components from the original De Havilland Comet family.

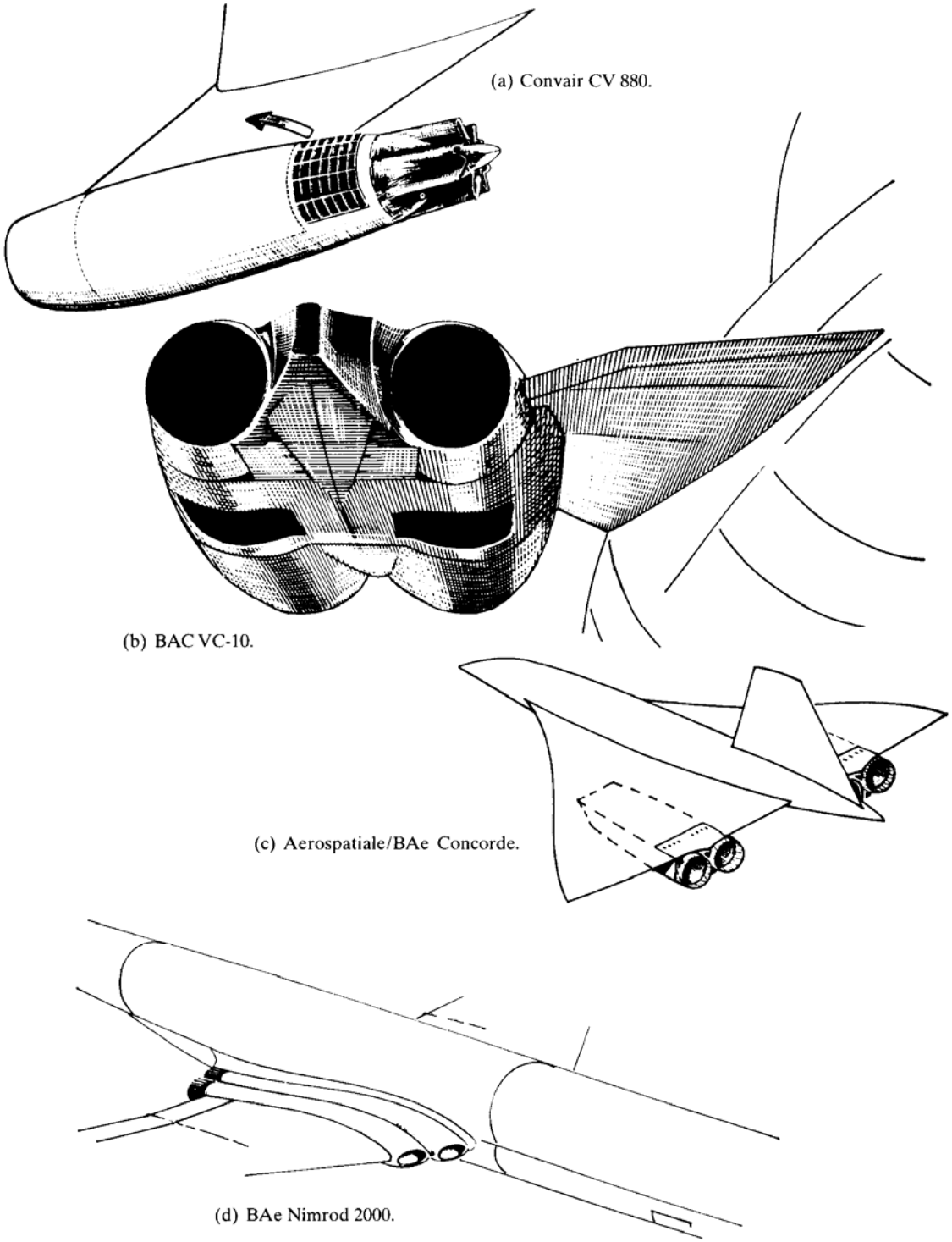

Fig. 7.11 Turbojet and turbofan engine installations.

7.5 Interference and symbiosis

The degree of interference between the external and internal aerodynamics of an aeroplane is hard to calculate with certainty. The combinations of speed, normal acceleration, height and ambient temperature (all of which add up to attitude to the flight path: the angle of attack), and Reynolds number, that result in flow instabilities are almost impossible to predict. The engine installation is one of the most thoroughly explored problems in all wind-tunnel testing, yet it is one of the most thoroughly misrepresented — simply because of the difficulties besetting accurate representation.

The installed drag of an installation is made up of several isolated parts:

Installed drag = f (isolated drag) (7-7)

Isolated drag = (nacelle wave drag) + (nacelle skin friction) + (intake drag) + (nozzle drag) (7-8)

The essential problem is the evaluation of f. If f = 1.0, then the installed drag is simply the sum of the isolated parts. If the engines can be placed in aerodynamically favorable positions around the airframe, without sacrificing handling performance and structural integrity, then f might be made less than 1.0. If, however, f is

greater than 1.0 the implication is that there is unfavorable interference between airframe and installation aerodynamics.

Although interference is usually unfavorable in its adverse effects upon powerplant performance, the effectiveness of aerofoil surfaces and the authority of controls, that is not always so. In an effort to maintain flexibility of performance at high speed over a wide part of the flight envelope, increasing use is made of symbiosis in powerplant design. Simply by making different parts mutually dependent upon one another a whole composite powerplant can be created which has improved efficiency. Examples seen already are the combination of propeller and gas turbine which together form a turboprop unit, and similarly, the turbofan and the propfan.

In the 1950s, with the danger of the Cold War between the Soviet Union and the West escalating, there was much discussion about symbiosis. An Operational Requirement, OR. 301, called for a rocket-propelled fighter with the ability to reach high-flying targets. The advantage of the rocket was that it did not depend upon atmospheric oxygen, because it carried its own source of O_2. The UK aircraft industry produced a wide variety of proposals, many of which resorted to the combination of rocket and air-breathing turbojet, to extend endurance over that of the pure rocket. The design study in Fig. E.2 is such an example, with an additional weight-penalizing variable-geometry wing, intended to further extend the ability to loiter.

A French example of symbiosis which was also not developed was the experimental French Nord Griffon 02, shown in Fig. 7.12. This aeroplane, which combined an air-breathing turbojet inside a ramjet duct, formed a turbo-ramjet.

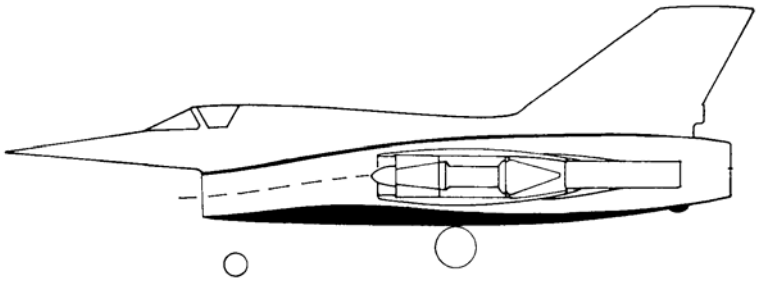

Fig. 7.12 Experimental symbiosis in the form of the French turbo-ramjet propelled Nord Griffon 02. In 1957 the aeroplane broke the world record for a closed 100km circuit at 885 knots (1640kph). It was used for supersonic research, funded by the US Air Force, until 1960.

Although such aircraft might appear to be out of date, they are not. In aviation, as in much else, there is nothing new under the Sun. One needs to know these things. There will be future occasions when the design engineer can then pull out and dust off past records of what has been attempted before, to give him or her a useful slant on what appears at first sight to be a new problem, but which is not.

Symbiosis results in larger-diameter powerplant units. Careful design is needed to balance gains against losses. Reliability is at a premium. Figure 7.13 shows a previous Rolls-Royce proposal for an advanced surface-burning aircraft, able to change its overall propulsive and aerodynamic shape to suit conditions. Such an aircraft was intended to climb at a constant EAS around 400k, until it reached M = 5 around 100,000ft. After changing shape it was expected to reach a hypersonic cruising speed of M = 15, around 200,000 ft. Between subsonic and M = 5 flight the variable geometry would allow use of the main internal engines, with a low aspect ratio integrated engine-box and wing providing lift. Beyond M = 5 the geometry would transform to a double wedge with external surface-burning of the fuel on the trailing underside. The rise in pressure with combustion would generate lift and thrust components. One hesitates to speculate too confidently on what would happen to lift, drag, pitching moments and controllability around M = 5, when changing over from one aerodynamic and propulsive shape to another. Clearly, the aircraft would have a high-order automatic control system.

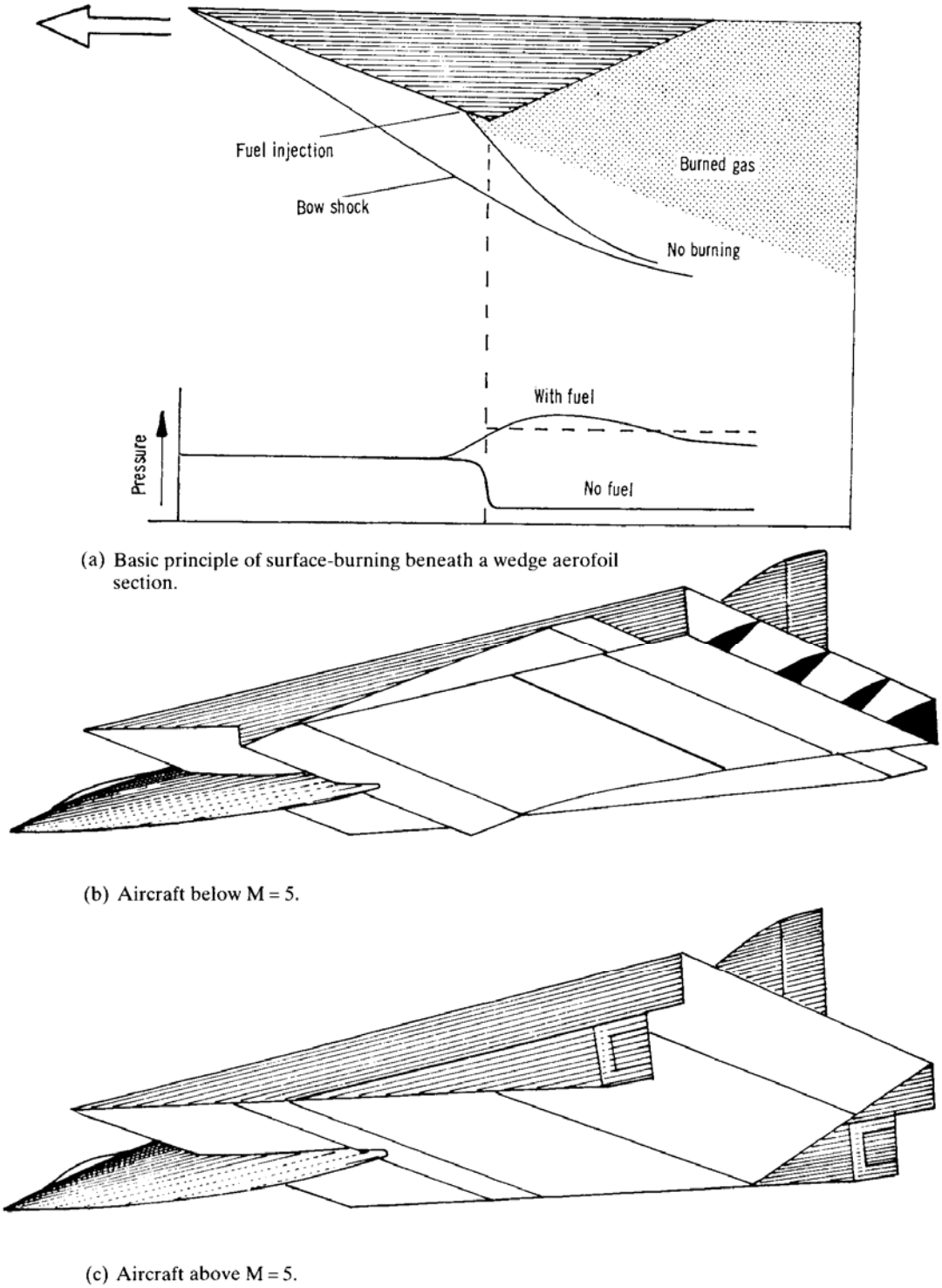

(a) Basic principle of surface-burning beneath a wedge aerofoil section.

(b) Aircraft below M = 5.

(c) Aircraft above M = 5.

Fig. 7.13 Rolls-Royce proposal for a surface-burning hypersonic aeroplane.

7.6 Powered lift

Powered lift, the augmentation of aerodynamic lift by a thrust component, is used to achieve vertical take-off and landing (VTOL), or at least short take-off and landing (STOL), and thus make aircraft as independent of prepared airfields as possible. The penalties incurred by carrying special lifting engines or devices for vectoring thrust and additional fuel for low-speed flight are compensated for in certain cases by smaller wing surfaces and lower structure weights. To achieve maximum economy with a VTOL aircraft one must equate power required for take-off and landing with that required in cruising flight. This is hard to do with anything other than highly supersonic aircraft with low cruising lift/drag.

There are some 15 ways of using power to generate lift, and these are shown in Fig. 7.14, after the original diagram by Campbell of NASA.

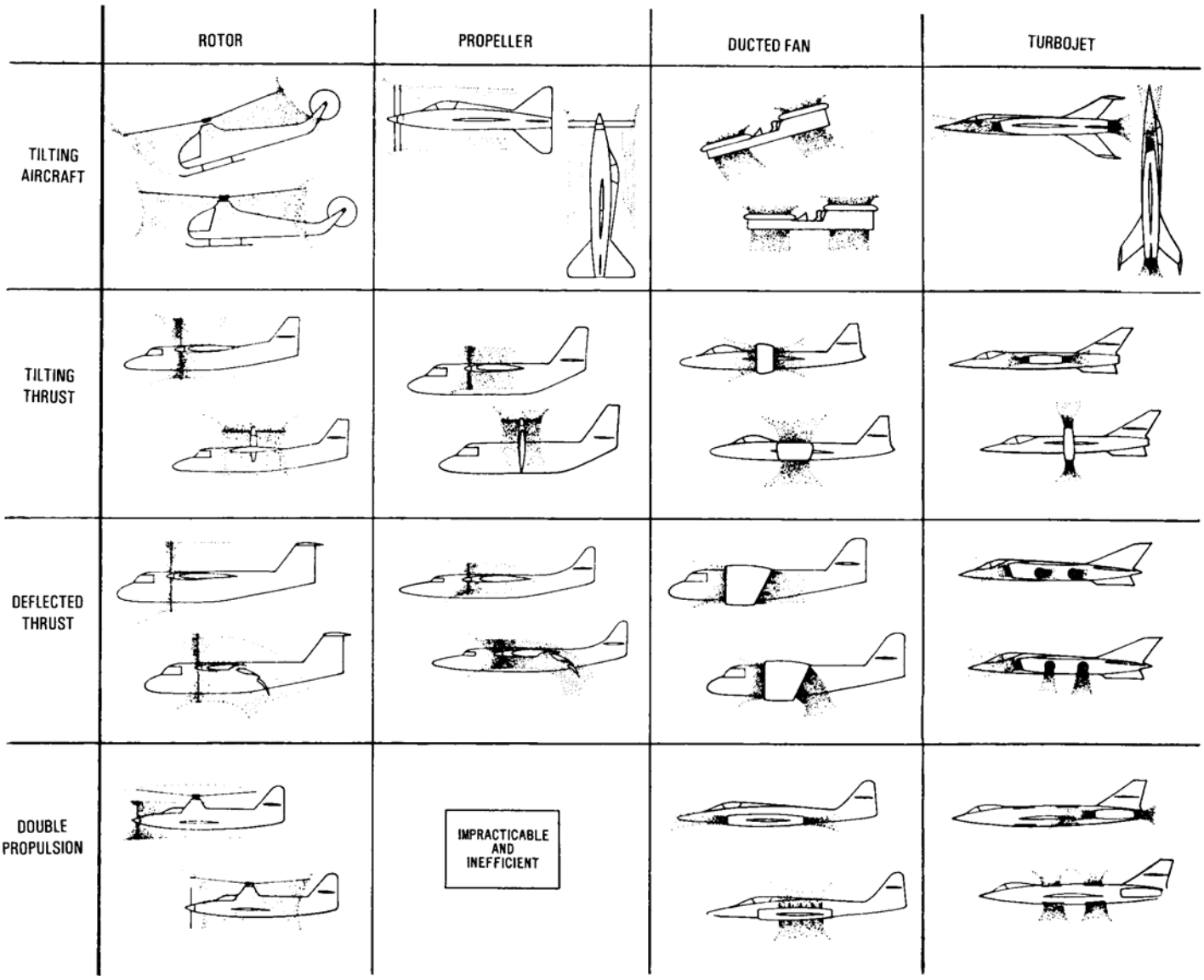

Fig. 7.14 The VTOL family of aircraft

All are governed by the same principles as for propulsive thrust: namely that the lifting thrust is the product of mass flow and Jet (or slipstream) velocity, while the power required is a function of the square of the jet (or slipstream) velocity:

$$P = \frac{1}{2} m_a V_j^2 \quad (7\text{-}9)$$

for a jet, and $P = \frac{1}{2} m_a W^2$ (7-10)

for a propeller.

Just as high aspect ratio is efficient for long-range and high altitude, the most efficient way of generating powered lift is by a large rotor moving a mass of air at low velocity. However, rotor-craft are limited to relatively low airspeeds (unless the rotor can be retracted or housed in forward flight) and they are not compact. A jet engine is the least efficient of all, as may be deduced from the power equations when typical values of 50ft/sec and 2000ft/sec (15 m/s and 600m/s) are inserted for the rotor and jet, respectively. Jet lift results in compact installations, helped by the modern ability to build very small, light, units generating high thrust/weight. The ducted fan can be regarded as a compromise between the rotor and jet. The ducted fan is smaller in diameter than a propeller or rotor, but tip-losses are reduced by enclosing the fan within an annular duct, possibly fitted with cascades. The total lift is that developed by the fan and an increment contributed by the relative airflow over the ducting.

Disc loading is a term describing the amount of weight, or lift, borne per unit area of rotor supporting it. If the area of the compressor face is taken as the rotor area, in the case of a jet engine, then a three-dimensional plot of lift generated/unit horsepower can be made against disc loading for the family of aircraft already illustrated. This is done in Fig. 7.15.

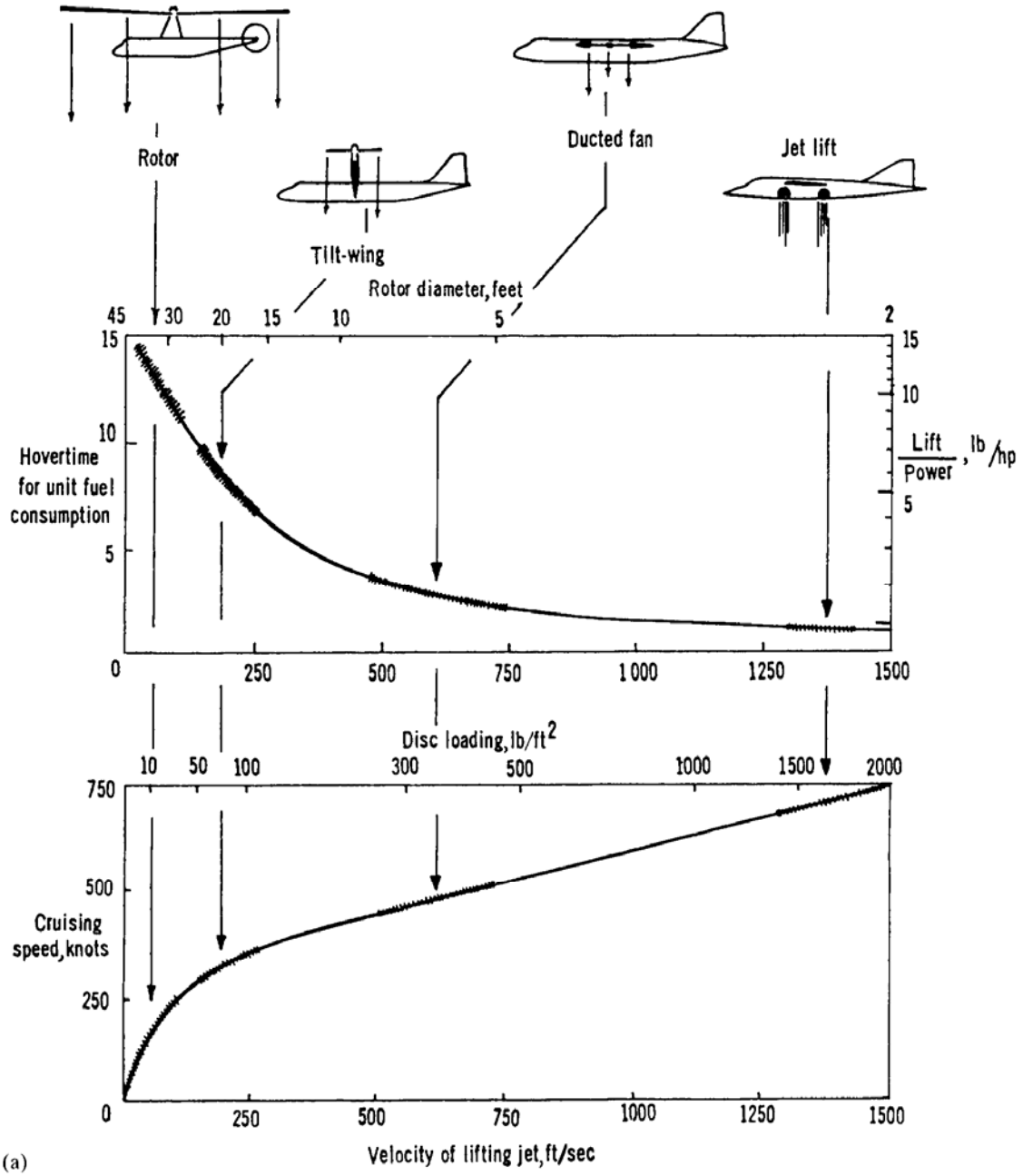

(a)

Fig. 7.15 (a) and (b) Powered lift spectrum. The Lockheed Martin aeroplane in (b) shows an arrangement of forward fan plus vectoring nozzle aft, for main lift and control in pitch, with lateral nozzles for roll control, to meet a short take-off and vertical landing Joint Strike Fighter (STOVL JSF) shipboard requirement.

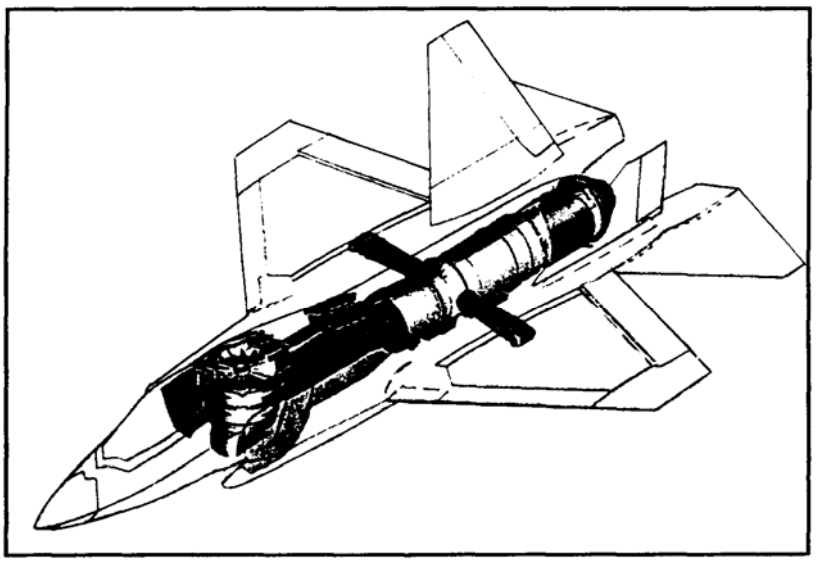

Lockheed Martin

(b)

Fig. 7.15 (continued).

There are 3 ways of employing jet lift. The first is to use vectored thrust from the main propulsion engine(s) (see Section 7.6.1). The second is to use independent, dedicated lift engines which are shut down in forward flight. The third is a hybrid: the provision of vertical lift engines forward of the **CG**, to augment and balance the effect of deflected thrust of the main engine(s) behind it.

Lift engines which make no major contribution to propulsion represent a considerable weight penalty if used in a relatively small strike aeroplane. Even so, the hybrid third engine arrangement of two separate vertical lift engines forward of the thrust-vectoring main engine was incorporated in the Soviet Yakovlev Yak-38, evolved from the Yak-36 for naval use, the prototype of which flew in 1971. Incidentally, early operational losses of the Yak-38 were similar in magnitude to losses of the AV-8B/Harrier II of the US Marine Corps.

While the Yak-38 was not supersonic, a successor, the V/STOL Yak-141, a supersonic naval fighter, reported to be capable of M = 1.8, was revealed in 1988. It featured a broadly similar engine arrangement. Some indication of the technical complexity involved is that the aeroplane has full-authority digital triplex fly-by-wire control systems, with integrated engine controls and vectoring reheat.

All jet-lift engine installations involve risk. Engine surge or failure, hot gas or debris ingestion can be equally catastrophic. Crew escape by means of ejection seats is vital. In the case of an engine arrangement like that favored by Yakovlev:

(a) Balance of the aircraft at the **CG** in the hover while using separate thrust sources demands highly reliable combustion and fuel feed, especially with a vectoring nozzle incorporating reheat. Surge or failure of any unit is usually catastrophic for the aircraft. The pilot/crew need an ejection seat system which can be fired automatically. That in turn involves an arming program, linked to the hover mode and incorporating accurate sensors.

(b) Nozzle design is critical. Operation in the vectored mode involves deflection down-wards through an angle in excess of 90^0, when thrust is needed to bring the aircraft to a halt and then to maneuver backwards. For normal flight the nozzle must produce reheat thrust just as reliably at supersonic speeds.

(c) Loss of thrust caused by ingestion of recirculating high-temperature exhaust gases must be minimal. This involves the incorporation of deflector plates, both fixed and retractable, to cope with large volumes of hot exhaust gases in a relatively confined space adjacent to intakes. Crosswind effects must also be taken into account in their design.

(d) Wear and tear (erosion) of concrete and other surfaces by heat and jet efflux cause the surfaces to break up, with the risk of pieces then being ingested. It is less of a problem on the steel deck of an aircraft carrier.

(e) Lift engines mounted forward of the **CG**, and main engine nozzle(s) near mainwheel units, can expose undercarriage legs and tyres to temperatures of 1000^0C or more, depending upon ambient and operational conditions.

Although it might appear easier to install separate, dedicated vertical lift engines in a large and heavy V/STOL transport aircraft, by keeping the engine pods away from tyres and important areas of airframe structure, there are still problems. The strategic freighter project in Fig. C.9 could also suffer ingestion of debris by the main propulsion engines, from vertical lift units when operating from raw surfaces, and in crosswinds.

Further, loss of one or more lift engines could make life trying. One can hardly give the crew ejection seats while providing none for the passengers.

Even so the weight penalty of using dedicated lift engines for large and heavy V/STOL aeroplanes, is possibly less severe than for smaller aircraft. In Section 12.1.3 it is shown that total engine weight varies theoretically as $\frac{1}{\sqrt{n}}$, where n is the number of engines used to generate the required thrust. Thus, indications are that for jet lift the relative weight penalty for a large aeroplane is less than for one that is small. The required number of small lift engines in slender pods can be fitted to hard points under the wings. The pods need not be much larger than overload fuel tanks.

A criticism of powered lift has been that in hovering flight high power and fuel consumption are wasted on going nowhere. The thrust/weight required for lift, control and maneuvering in the hover is around 1.4, while the lift/drag in cruising flight may be around 10 (i.e. the equivalent cruising thrust/weight = 0.1). Such an aeroplane uses 14 times as much fuel hovering as cruising for the same interval of time. Every minute spent hovering reduces the range of an aircraft cruising at M = 1.2 by something like 11 nm. It follows that there is a close correlation between hovering time, range and disposable load. Considerable fuel savings are effected by even a short take-off run. That knowledge led to the introduction of the ski-jump, the raised forward end of a portion of the flight-deck of aircraft carriers operating VSTOL aeroplanes.

7.6.1 Thrust-vectoring

In spite of the general criticism leveled at the penalties of jet lift, there is no doubting the high opinions expressed by the USMC of their AV-8B/Harrier II aircraft; nor of the successful use of Harrier aircraft by the Royal Navy and Royal Air Force in South Atlantic operations in the early 1980s. Thrust-vectoring is the most singular feature of these long-operational aircraft produced by British Aerospace: the BAe Harrier/Sea Harrier/McDonnell Douglas AV-8B/BAe Harrier GR5, all of which derive from the Hawker P 1127, which first flew in 1960.

Further advantages were found during service with the Harrier: that deflecting in flight the set of engine nozzles (two cold, two hot) enhanced maneuverability. Operationally this was described as 'viffing'. Turn radii are tightened, their rates increased, and sudden steps inserted in flight paths help to spoil the aim of attackers.

Since then thrust-vectoring has found wider applications; it is becoming a standard feature of all future fighter projects.

(picture)
Plate 7-2 (a) Russian Yakovlev Yak-38 (NATO codename, Forger-B) two-seat naval trainer, which combines vectoring thrust from main engine, with direct lift from forward lift engines. The dorsal intake cover for the latter is raised. Note the dorsal and ventral strakes to trip recirculation of exhaust gases (see also Appendix F). (b) Supersonic Yakovlev Yak-141 which employs a vectoring main engine between a twin-boom tail, and direct lift from forward engines. Great care is needed with engine arrangements of this kind, to avoid the effects of debris and exhaust gas ingestion (see also Appendix F).

7.7 Wing and aerostatic lift combined (the AeroShip, Appendix H)

The search for performance and efficiency, when carrying out essential and extreme aeronautical tasks, leads in unconventional directions. The carriage externally of Shuttle spacecraft on the backs of specially modified American and Russian heavy transport aeroplanes, and of whole wings built in the UK carried inside a bloated 'Guppy' fuselage to final Airbus assembly in Toulouse, are now commonplace examples.

For heavier and more difficult loads there is another possible solution. This is a capacious aircraft which combines the aerostatic lift of helium or hydrogen-filled gas cells with the aerodynamic lift of a wing. When heavier than air it fits the definition of an aeroplane; at other times its operation is that of an airship. The advantage of the combination is that heavy water-ballast carried by an airship, to enable it to trim its mass to that of the surrounding air, may be reduced. Weight of ballast is replaced by an alteration in aerodynamic lift, involving the adjustment of the angle of attack. The technique is not new, airship captains used it on every flight, often flying through rain to capture more water in flight. The difference, which suggests the classification as an *AeroShip*, is that the shape of the aircraft is no longer that of a solid of revolution, instead it is envisaged as having a voluminous, integrated, cantilever wing of low aspect-ratio delta planform, designed to generate aerodynamic lift more efficiently than a solid of revolution.

Further, in its larger sizes the aeroship has the potential to accept helicopters, or small aeroplanes, landing on a flight-deck along its back. This would facilitate the transfer of payload, freight and passengers, without the complex and time-consuming airship mooring procedures of the past.

7.7.1 Aerostatic lift

Aerostatic lift is the first principle of flight; aerodynamic lift is the second. The attraction of aerostatic lift is that it enables an aircraft to do cheaply and of its own volition something that the pure aeroplane cannot, without great expenditure of costly effort. It does not depend upon forward motion and the aircraft can rise and descend in silence. The aerostat is slow compared with an aeroplane, but it is far safer — in spite of the loss of the German airship, Hindenburg (most of those on board escaped), which appears to have been caused by the silver-doped fabric being ignited by a static electric discharge in the atmosphere (as described in Appendix H).

The lift and drag of an aeroplane increase as the square of its scale, and its mass as its cube. Aerostatic lift, depending upon displaced mass of air by a lighter gas, becomes more efficient as the cube of scale. In other words, the lift/drag ratio depends more upon lifting volume and the drags of both wetted area and equivalent parasite area, such that

$$\text{Aerostatic (lift/drag) varies more or less as } (\text{scale}^3/\text{scale}^2) = \text{scale} \qquad (7\text{-}11)$$

Thus, the larger the aerostat, the more efficient it grows in theory. The power requirement being proportional to the drag also means that the larger it grows the lower the specific power and the more fuel efficient it becomes.

Hydrogen is no longer needed as the lifting medium. Helium is a safe byproduct of uranium decay, it is found in almost all natural gas fields. Helium, although the heavier of the two, displaces 93% of the mass of air

displaced by the same amount of hydrogen (typically by weight 65 lb/1000 ft^3 (1.043 t/1000 m^3) as against 70 lb/1000 ft^3 by hydrogen). These values are then, respectively, the lift per 1000 cubic feet of each gas. Loss of gas through permeable membranes was always a problem in the past. Today, because of modern materials like Mylar, the loss of lifting gas from a cell might be no more than 0.5% in 1 year.

It follows that lift is directly proportional to volume. For example, assuming a given payload fraction, to design an aerostat to carry double the payload one doubles the total displaced volume, by building the aircraft larger, scaling it up in proportion to $\sqrt[3]{2}$ = 1.26. The length then grows by 26%, but the wetted area, drag and required power only rise in proportion to $\sqrt{1.26}$ = about 1.12 (actually, a little over 12%).

7.7.2 Added discrete wings

When attempting to add discrete wings to a solid of revolution (the distinction being made in Fig. 2.3), we run into difficulties. It is not easy to attach them to a lightweight envelope without penalties in weight and drag. Wings are inevitably small (but can be more efficiently shaped in planform) and need external bracing. Larger wings need either uneconomically heavy spars running athwartships within the envelope to resist the end loads, or massively overweight ring-frames. Of the two, externally braced wings appear to be the least penalizing for small hybrid aerostats. Larger discrete wings are excessively heavy for their purpose.

Chapter 8 Balancing the Aerodynamic Sum

So far we have looked in some detail at the various aerodynamic portions of an aeroplane and seen how each is intended to play a part in making flight as efficient as possible. When the aeroplane is seen as a whole, in motion through the air, then one realizes that we are no longer dealing with a mere piece of hardware, but with a machine that in many ways responds to its environment as if it had a life of its own. The same near-live response to environment is part of the nature of a ship, in fact there are strong similarities between both in their responses to the elements in which they move.

Look at an aeroplane in the air: how is it stabilized and controlled? Are the stabilizers before or behind the wing? Are control surfaces large and prominent, or are they small and apparently insignificant to the eye? Is there a marked inclination of the wings from root to tip (dihedral), or do the wings seem to droop downwards towards the tips? If they are set with the tips in a lower plane than the root (anhedral) then are the wings also swept backwards? The answers to such questions are to be found in the study of stability and control: the way the aerodynamic sum has been balanced.

In the early days the art of flying was said to lie in keeping the aeroplane 'in such an attitude that the air pressure is always directly in the pilot’s face’ (H. Barber, 1916). Although pilots of modern aeroplanes probably spend their lives without feeling the pressure of air on their faces at all, the principles are still the same. Stability is possessed by an aeroplane if it responds to a small disturbance in such a way as to oppose the disturbance and return to its original state, without intercession by the pilot. Control may be thought of as disturbance of equilibrium by the pilot, and maintenance of the disturbed equilibrium against the basic stability of the aeroplane. Stability is measurable numerically in terms of derivatives: the rates of change of forces and moments in pitch, roll and yaw, with changes of airspeed, angles of attack and rates of rotation about various axes. Controls alter the value of the stability derivatives.

Whenever a pilot wishes to maneuver an aeroplane he alters the positions of the various control surfaces. Conventional surfaces are basically simple flaps, hinged portions of wing and tail trailing edges. Movement of the surfaces alters the local pressure distributions and resultant aerodynamic forces. Reactions, in effect hinge-moments, are felt by the pilot as a feedback through the control system. The feedback may be direct (but reduced by the mechanical advantage of the system) or, if hinge-moments are too high to be handled efficiently, artificial forces may be transmitted through the stick and rudder-pedals by an artificial feel system. Ideally, control forces should increase with airspeed, angle of attack (and normal acceleration), and with increasing control deflection: as a safeguard against the pilot inadvertently breaking the aeroplane.

(picture)
Plate 8-1 McDonnell Douglas F-18E Super Hornet showing sturdy undercarriage, leading- and trailing-edge flaps for ship-borne operations. The long wing-root strakes, stretching to just below the cockpit are LEXs, for precisely the same purpose as those of the Harrier GR.7. Many modern supersonic fighters now have twin fins and rudders to compensate for loss of lift with compressibility, which is proportional to $C_L M^2$. Note that the rudders are deflected inwards, this provides additional nose-up trim authority, while also increasing drag. When there is plenty of thrust available it helps to open air brakes and increase drag to an extent, to allow the engines to be run at higher RPM on the approach, that in turn shortens spool-up time in the event of a go-around (a 'bolter’ to naval pilots) (see also Appendix F).

8.1 Reference axes

There are 3 sets of reference axes that are significant in the measurement of stability and control: the body axes, the wind (or stability) axis, and the inertia axes. The body axes have their origin at the centre of gravity, O, and are denoted positive with OX forwards, OY sideways to the right (starboard) and OZ downwards. It follows that the XZ-plane splits the aeroplane symmetrically along the centre-line. As the **CG** varies with disposable load and airborne time, an arbitrary value fixes O relative to the designer's datum point which lies inside the outline of the aeroplane as laid out on the drawing board.

8.1.1 The wind axis, or stability axis

The direction of flight at a particular moment is the axis along which the relative wind (relative airflow when local effects are ignored) is assumed to blow. If, however, a transient gust appears the wind axis is changed while the momentum of the aircraft along the flight path remains sensibly unaltered, so that the coincidence of wind axis and flight path is not immutable.

The wind axis before a disturbance is thought of as remaining fixed relative to the body axes, and in this way it serves as a datum for measuring subsequent changes in flight path. Figure 8-1 illustrates an extreme example of the difference between wind and body axes, such as might be experienced during a spin.

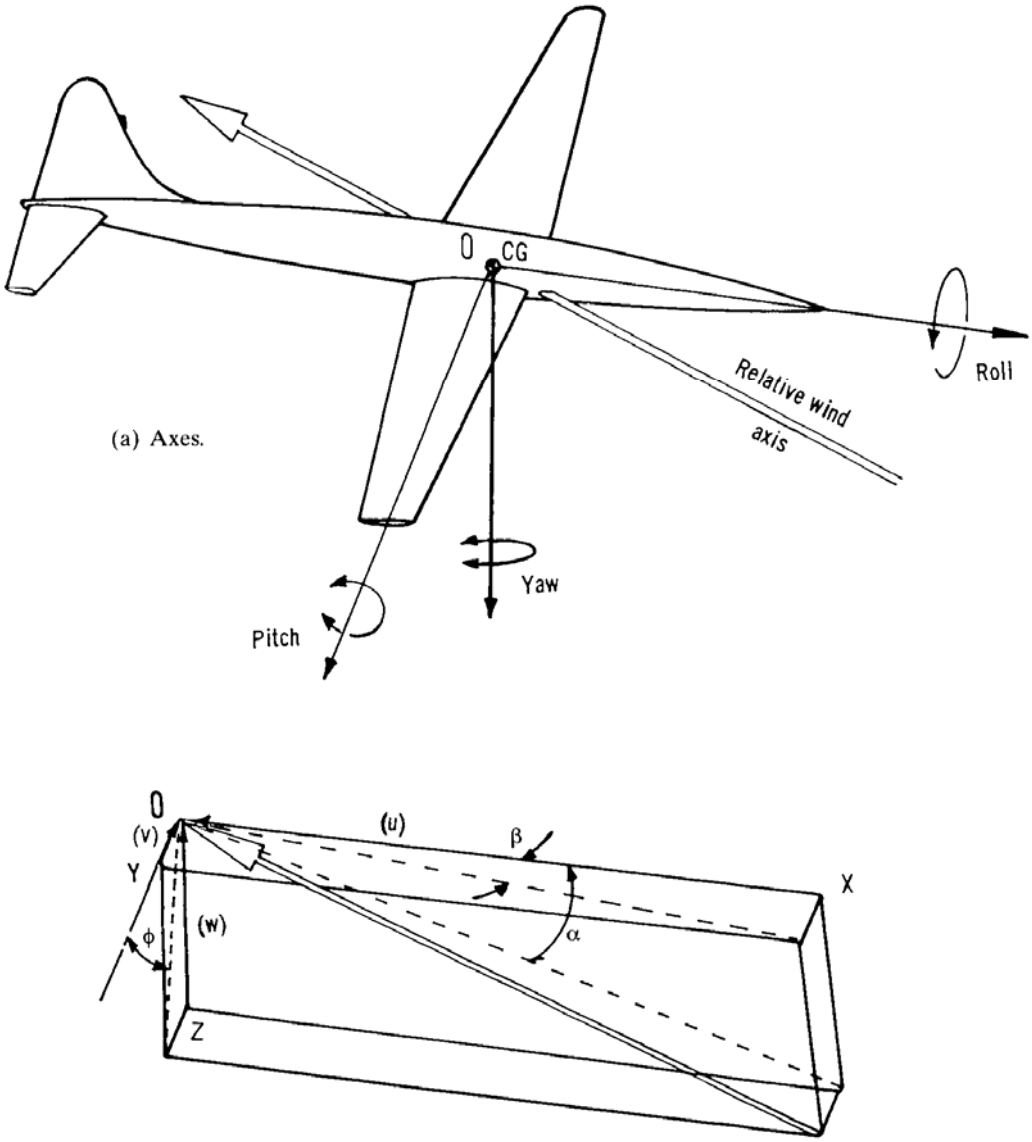

Fig. 8.1 Relationship between the body and wind axes at a particular instant.

The relative wind is seen to have 3 components: one fore and aft, one vertically upwards and one from the side. Any change in the wind axis is, therefore, accompanied by a change in the airspeed indicated in the cockpit, the angle of attack of the aircraft in the pitching (XZ) plane, and the angle of attack in the yawing (XY) plane.

8.1.2 Inertia axes

All masses are said to possess inertia, and the distribution of mass throughout the airframe is most important. Pitching, yawing and rolling takes place about the **CG** and the moments of inertia about the **CG** are an indication of how swiftly such motions may build up (or be brought about by control movements); and of how much aerodynamic effort will be needed to stop them when they have become established.

Moment of inertia, I, about an axis is defined as:

$$I = \sum_0^M Mr^2 = Mk^2 \qquad (8\text{-}1), (8\text{-}1a)$$

where *M* is the total mass (W/g), *m* is the mass of a small component of the whole, *r* is the distance of the component (i.e. the radius of its rotation) about the axis in question, and *k* is the radius of gyration of the total mass. The larger the radius of gyration of a given mass then, like a flywheel, the more effort is needed to wind up and to slow down and stop rotary motion.

The moment of inertia in roll about the OX-axis is denoted A; that in pitch about the OY-axis, B; and that in yaw about the OZ-axis, C. There is, however, a principal inertia axis, passing through the **CG** and lying in the plane of symmetry which may be found to lie at an acute angle to the body axis, Fig. 8.2, which dominates the subsequent motion of long slender aeroplanes having large ratios of pitching inertia to inertia in roll.

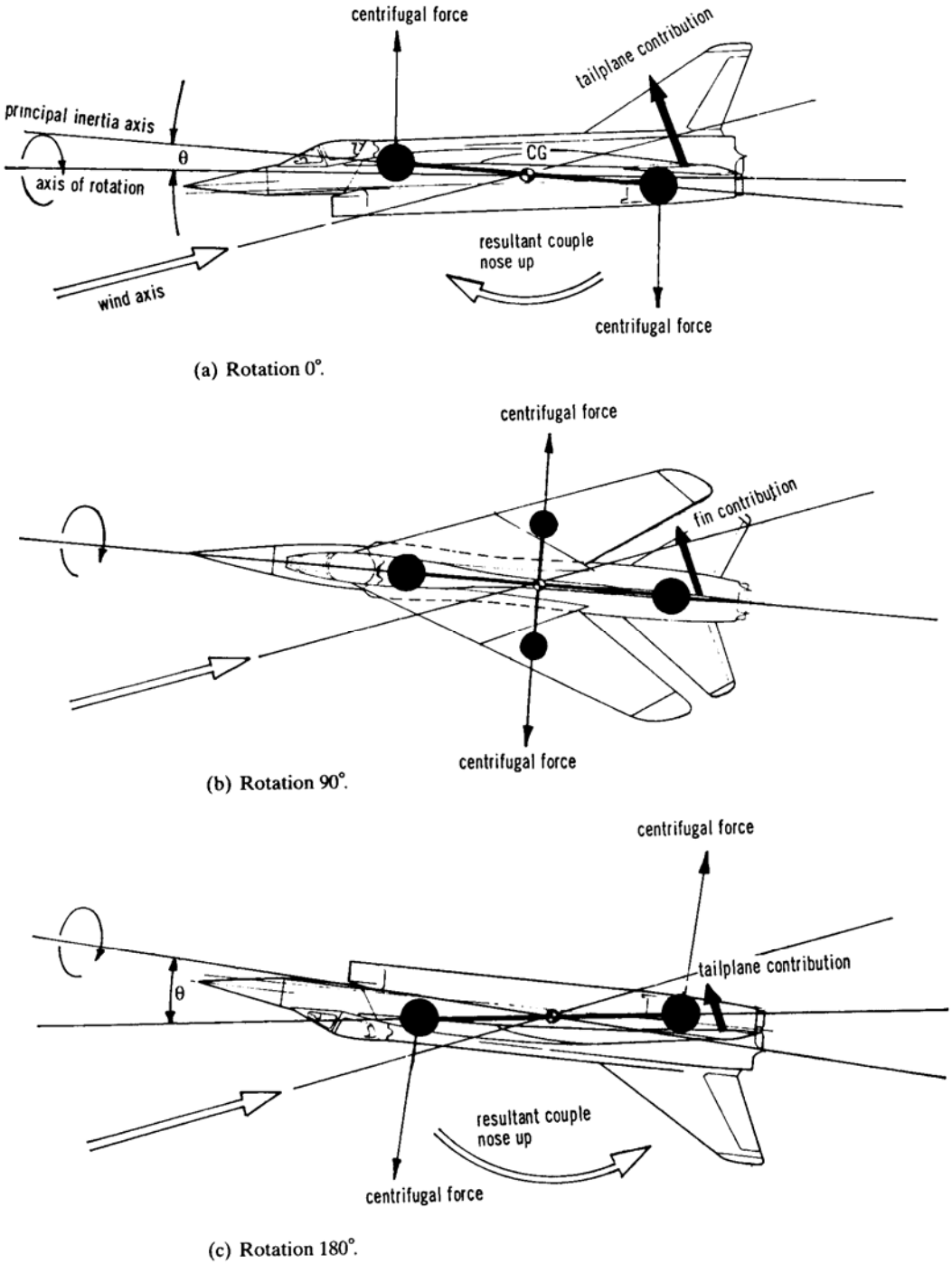

Fig. 8.2 Inertia coupling during roll. The aircraft mass can be represented by a system of ‘dumbbell masses’: note divergence in pitch (θ increasing) through action of centrifugal forces.

The motion of any aeroplane disturbed by either the pilot or the environment depends upon the outcome of a battle between the aerodynamic stability and the inertias in pitch, roll and yaw. At subsonic speeds aeroplanes have wings of high aspect ratio and spans that are much the same order as the lengths of their fuselages, and the principal inertia axes are almost coincident with the body axes. The response of such aircraft to basic stability and movements of the control surfaces is dominated by the aerodynamic forces involved. Aircraft designed for supersonic flight have low aspect ratios and much smaller inertias in roll than in pitch and yaw. Although in this case initial motion in roll takes place about the wind axis when the ailerons are deflected, subsequent motion tends to take place about a resultant axis near the principal inertia axis, because this represents the way of least resistance. Before rotation about the resultant axis can be established, however, inertia coupling may have taken place and catastrophically broken the aeroplane.

Inertia coupling

The more powerful the aerodynamics, the smaller the moments of inertia and the more stable the aeroplane, the more nearly will motion take place about the wind axis (and pitch and yaw axes at right angles to it). The less stable the aeroplane, and the larger the inertia in pitch and yaw, the more nearly will motion take place about the principal inertia axis. If the roll axis is inclined to the flight path (and, hence, the wind axis) there will be a cyclic interchange of angle of attack and sideslip (angle of attack in the XY-plane). Such a cyclic interchange is shown in Fig. 8.2 for 180^0 of roll. The figure also shows how divergence in pitch is caused by the centrifugal pitching moments overcoming aerodynamic moments. The result of inertia coupling for the hypothetical aeroplane shown would be failure of the fin, or wings or tailplane, through reaching too high an angle of attack or sideslip. The pilot would have to be warned of the danger of combining high rates of roll with low EAS at height with an aeroplane having such dynamic configuration. The significance of speed and height is that aerodynamic damping is reduced at high altitudes, so that response to control deflection is much more lively. Low EAS and high TAS result in the aircraft flying at a large angle of attack at high Mach number. At large angles of attack the radii of gyration of the fore and aft masses about the axis of rotation are increased and, therefore, the centrifugal forces generated by a given rate of roll.

The figure also shows that the fin and tailplane forces provide correcting moments that would point the nose of the aeroplane into the relative wind, if they have enough authority. Before considering the function and positioning of the various stabilizers, let us consider what factors affect the efficiency of an aerofoil surface.

8.2 Factors affecting the efficiency of an aerofoil surface

Stabilizing surfaces, like wings, are designed with the same aerodynamic principles in mind, although they may not have the same geometry. Most stabilizers have lower aspect ratios than the wings with which they are combined. Three main factors affect their efficiency as lifting surfaces: aspect ratio, compressibility and TAS, although local interference and wake-shedding from other parts of the airframe are also important.

8.2.1 Aspect ratio

At a given angle of attack a low aspect ratio aerofoil does not generate as much lift as one having a higher aspect ratio. At very large angles of attack the trailing (and leading) edge vortices maintain usable lift from a low aspect ratio aerofoil long after an aerofoil of higher aspect ratio has stalled. However, the drag is very high.

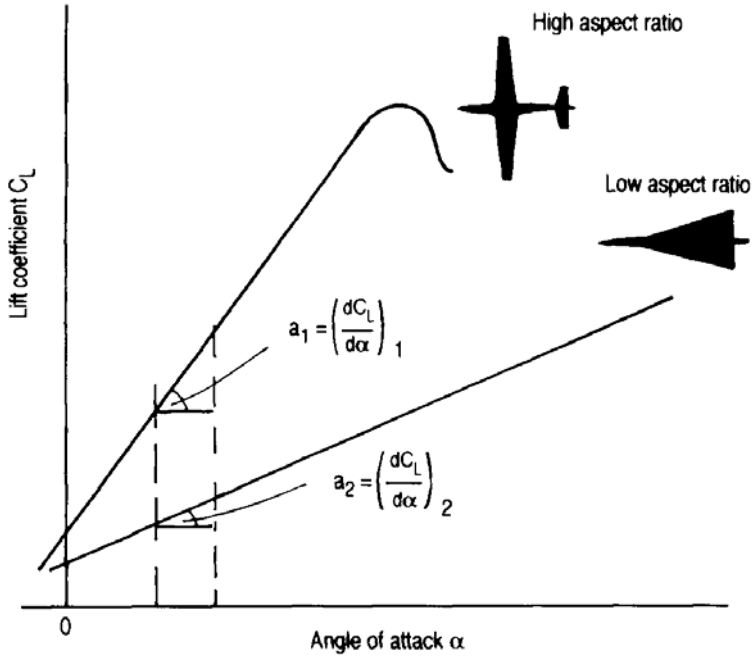

Fig. 8.3 Effect of aspect ratio on slope of lift curve a, of an aerofoil surface (applicable to wing or stabilizer) when unaffected by compressibility.

It follows from Fig. 8.3 that, for a given change in angle of attack, a high aspect ratio aerofoil generates a larger lift increment than one of low aspect ratio. However, if tail surfaces have lower aspect ratios than the wings with which they are combined, then the wing will advantageously stall before the tail, and the resultant nose-down pitching moment will tend to unstall the aircraft.

For the very same reason fighter aircraft, especially those used during and after World War I, had very low aspect ratio fins and rudders. Pilots could then maneuver using large angles of sideslip when necessary for evasion, or bringing guns to bear on targets, without danger of a fin-stall. Sideslipping is an excellent way of getting down steeply into a short field without using flaps.

8.2.2 Compressibility

Compressibility produces 2 important effects. The first is that the aerodynamic centre moves rearwards from somewhere near the quarter chord point to the half chord point, and this causes a nose-down moment that must be trimmed out in some way if the aircraft is not to dive into the ground. The second is that the lift coefficient obtainable at a given angle of attack changes with Mach number, as shown in Fig. 8.4(a). The variation in lift, expressible in terms of $C_L M^2$ in place of $C_L V^2$ (Eqn (5-8)), is shown in (b).

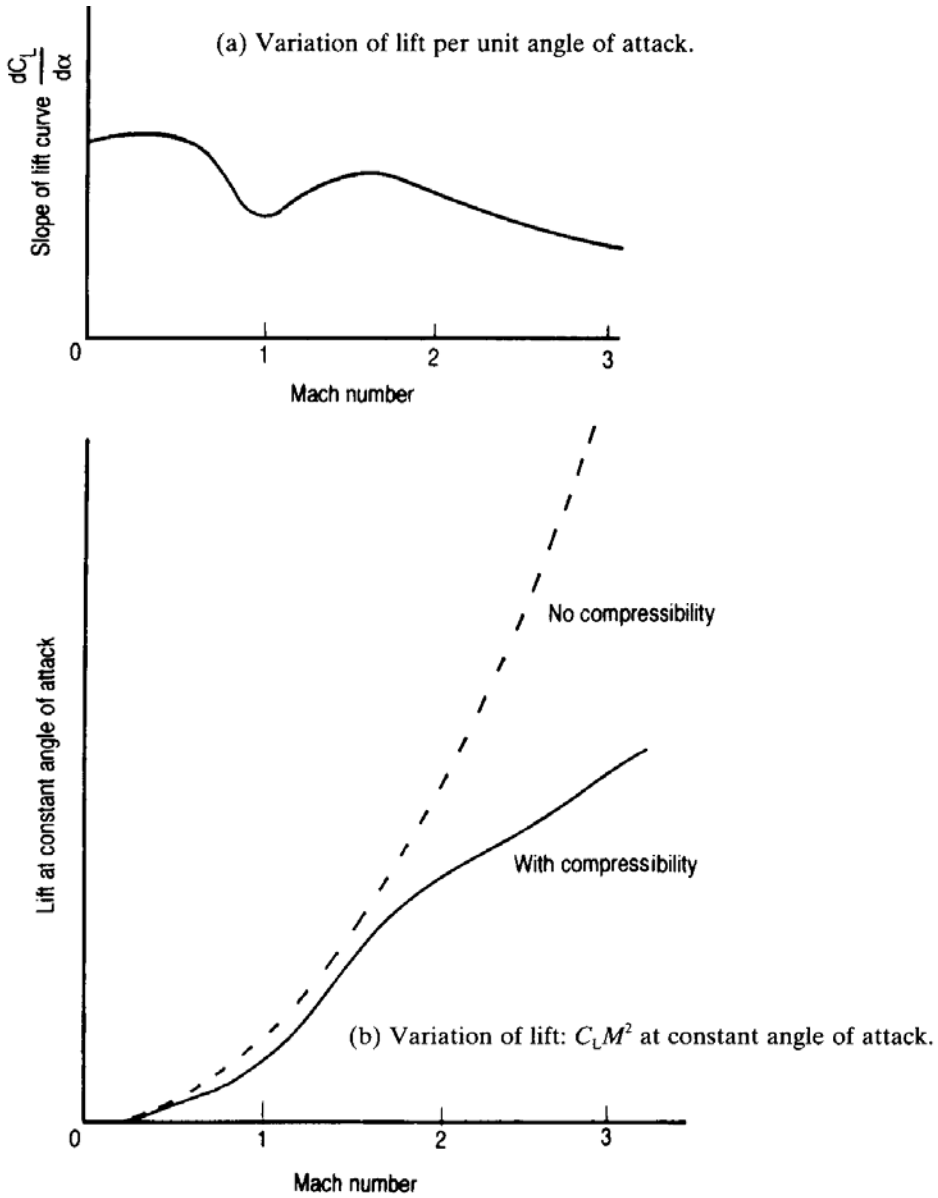

Fig. 8.4 Effect of compressibility upon effectiveness of an aerofoil surface.

The significance of these curves is that they show that the rate of response of an aircraft to control displacement, or to a disturbance, does not increase as V^2 (or M^2). In fact, if the aerodynamic force flattens out enough at high speeds, and the aerofoil surface is affected by the wake of surfaces ahead of it, then the stability and control of the aeroplane may well diminish as speed is further increased. An example is the way in which some very high speed aircraft 'run out of fin area' at high speeds: i.e. they require even larger fins than those fitted. Many supersonic fighters have grown additional fin area (and keel-strakes) as they have been developed with time. Many modern supersonic fighters now have twin fin surfaces for that reason. For naval aeroplanes this can be an advantage by reducing the height of the fins, making stowage easier between decks.

The loss of aerodynamic effectiveness with increasing speed is caused by the aerofoil surfaces increasingly compressing and expanding the air, i.e. merely changing the proximity of the molecules, without a corresponding increase in their useful rate of displacement, the measure of their capacity for useful work.

Shift of aerodynamic centre (neutral point, Eqn (5-9))

At angles less than the stalling angle of an aerofoil, the lift increases with increasing angle of attack, but the pressure distributions do not remain similar throughout. At small angles of attack the centre of pressure of the distribution (in effect the point at which the lift acts) is further behind the leading edge than at larger angles. As angle of attack increases the centre of pressure moves forwards to a position limited by the stall, whence it moves back to around the $0.5\bar{c}$ point. The aerodynamic centre, or **ac**, is the point on the chord about which the moment of the aerodynamic force, caused by the pressure distribution, remains constant. At shallow angles of attack the lift coefficient is small, but the moment arm about the aerodynamic centre is large. At steeper angles the C_L is large, but the moment arm about the **ac** is small. The product of C_L and moment arm

remains constant about the aerodynamic centre. One should hasten to add that in using C_L alone the picture has been grossly simplified, because the drag component has been neglected and this too has a moment about the aerodynamic centre. This was summarized in Fig. 5.8.

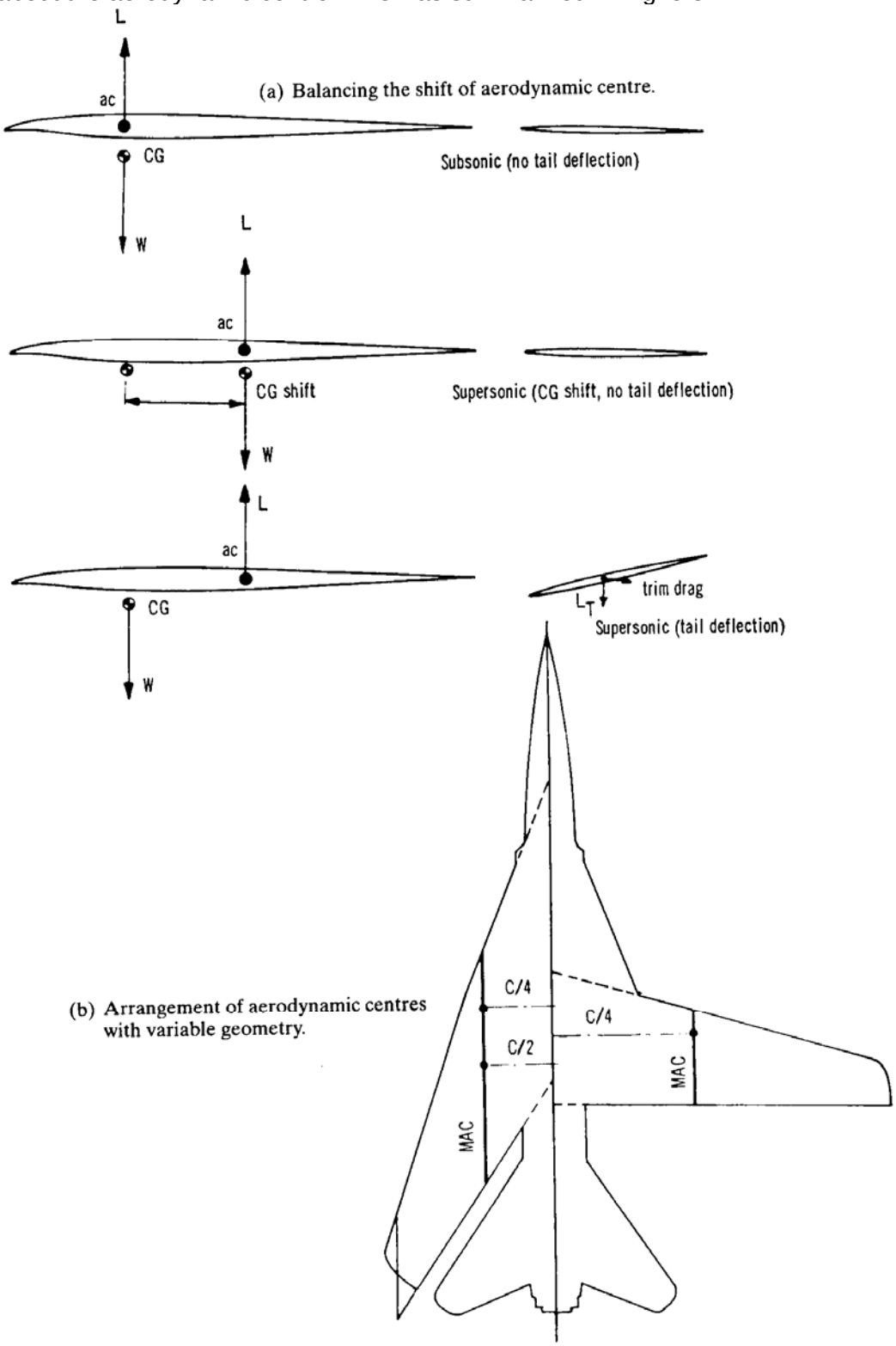

Fig. 8.5 Shift of aerodynamic centre with Mach number.

At subsonic speeds the bulk of the lift is provided by the forward portions of an aerofoil; in fact the lift acts somewhere around 0.25 to $0.3\bar{c}$. At supersonic speeds the whole of the surface behind the crest of an aerofoil causes expansion of the relative airflow. The accompanying suction over the upper surface contributes far more to the total lift than at lower speeds, and the resultant lift acts much further aft (around the $0.5\bar{c}$ point). If the centre of gravity is at $0.25\bar{c}$, then the supersonic, nose-down, pitching moment must be trimmed out by the use of controls, or the **CG** must be shifted (e.g. by pumping fuel rearwards).

A simplified picture, in which the pitching moment about the aerodynamic centre has been deliberately omitted, is shown in Fig. 8.5(a), illustrating displacement of the **CG**, which helps to eliminate trim-drag. Figure 8.5(b) shows the possible arrangement of the variable geometry of an aircraft like the fighter in Fig. E.2,

where the aerodynamic centre with the wing extended for low-speed flight lies between the aerodynamic centers in sub and supersonic flight.

The North American B-70, shown in Fig. 6.10, compensated for the rearward shift of the aerodynamic centre by turning the wing tips downwards in supersonic flight, thus removing some of the area aft of the **CG**. The increment in effective fin area from the turned-down tips compensated for any loss of fin effect due to compressibility — for the fins, like any other aerofoil surface, suffer in the same way as shown in Fig. 8.4.

8.2.3 Aerodynamic damping and relative density: the effect of true airspeed

It was said early in the book that the true airspeed and equivalent airspeed, used in actual aerodynamic calculations, are only identical at sea level in the standard atmosphere. Throughout the book forces have been shown in the form

$$L = C_L \frac{1}{2} \rho V^2 S \qquad (5\text{-}8)$$

in which ρ is the density of the air at the height in question and V the TAS. The equation would have been written by an aerodynamicist as

$$L = C_L \frac{1}{2} \rho_0 V_i^2 S$$

from the relationship implied by Eqn (1-6), i.e.

$$\rho V^2 = \rho_0 V_i^2$$

If the EAS is maintained constant during a climb to height, then all aerodynamic forces remain constant (in the absence of compressibility effects) along with angle of attack and the angle of displacement of a control surface to generate a constant force. However, the true airspeed increases. Now, when an aircraft pitches, rolls or yaws it does so about the **CG**. The relative airflow (in effect the relative wind) felt by a surface is altered by a component due to rotation. For example, a constant rolling moment from the ailerons will, at low altitude, rotate the aeroplane at a given rate. The rate will depend upon inertia and the forces generated by the altered relative airflows over the whole airframe. At high altitude the rolling moment and inertias remain the same, but the angle through which the relative airflow changes is decreased, because the TAS component is increased, as shown in Fig. 8.6. The forces due to changed angle of attack are therefore less and the initial response of the aircraft to the applied control is much faster than at low altitude, i.e. aerodynamic damping of the motion is reduced. This is called the relative aircraft density effect.

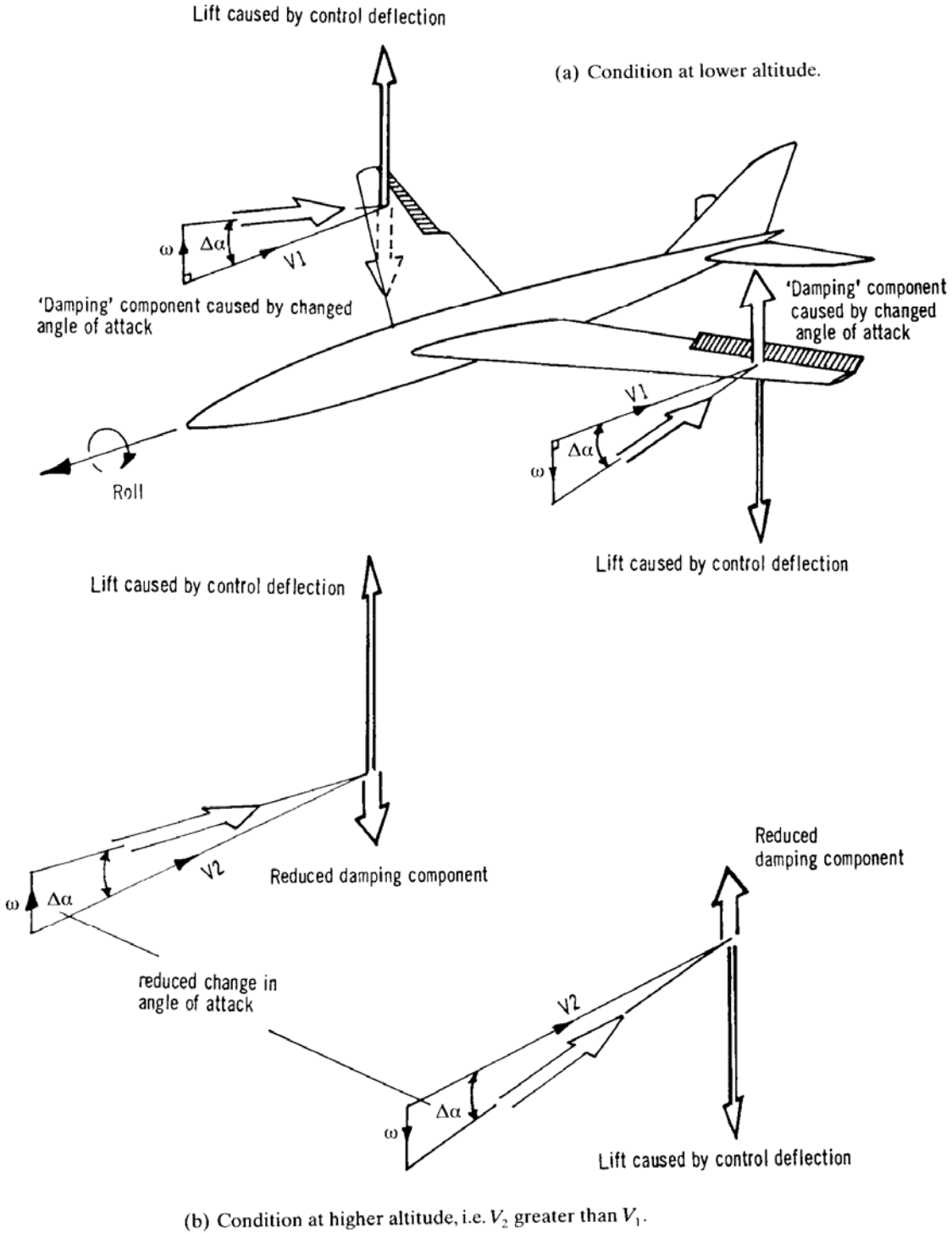

Fig. 8.6 Relative aircraft density effect. The change of aerodynamic 'damping' component with altitude at constant equivalent airspeed.

8.3 Longitudinal stability: balancing an aeroplane in pitch

When it comes to analyzing longitudinal stability there are 2 aspects normally taken into separate account: the static stability, and the dynamic stability. Closely related to the static stability is the study of longitudinal maneuverability and control: the effect of altering the static stability by the deflection of the stabilizing and control surfaces. The measure of static stability and longitudinal maneuverability and control are academically convenient steps towards understanding reality: that an aeroplane in flight is in a dynamic state. Whenever static cases are considered the dynamic reality behind them must be constantly borne in mind.

8.3.1 Static balance

An aeroplane is stable if, after a disturbance in pitch (conventionally, a gust), it returns to the undisturbed condition. Longitudinally, such a disturbance increases the angle of attack of both wing and stabilizer and, consequently, the lift generated by these surfaces. The aeroplane is statically stable if the resultant moment about the **CG** decreases the angle of attack. In responding to the disturbance the dynamic situation inevitably

appears, for it is rarely that the response is ‘dead-beat’, i.e. that the aeroplane adjusts its angle of attack without the slightest trace of an oscillation in pitch about the **CG**. If the oscillations die away with time (their amplitude decreases) then the machine is dynamically stable. If the oscillations increase their amplitude with time, then the aircraft is dynamically unstable, but statically stable. If a disturbance results in further divergence of the aircraft from the flight path, then it is statically (and dynamically) unstable.

An aeroplane is trimmed when the moments of all forces about the **CG** are zero, i.e. the machine can be flown ‘hands-off’ by the pilot. Of course, it does not follow that if the aeroplane can be trimmed for insignificant disturbances it can also be trimmed for larger varieties. Trim can be defined with mathematical precision, but in reality it becomes purely relative.

Figures 8.7 and 8.8 relate the conditions for static longitudinal stability to the explanation given by S. B. Gates in 1940 (and described as a stunning revelation at the time).

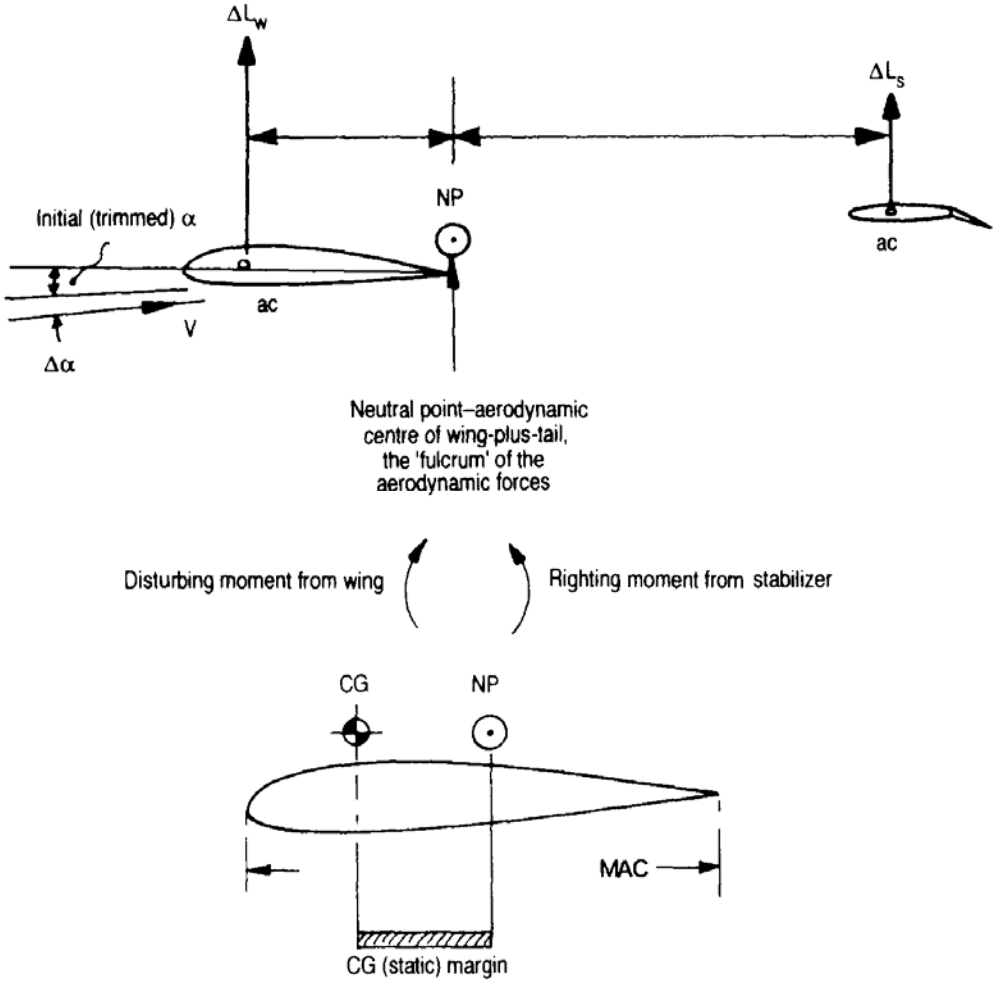

Fig. 8.7 The amount of longitudinal stability is proportional to the **CG** (or static) margin, which is the distance between the **CG** and the neutral point, NP. The distance is expressed as a percentage of the mean aerodynamic chord of the complete aircraft. Drag forces have been neglected. The concept is extended further in Fig. 8.8.

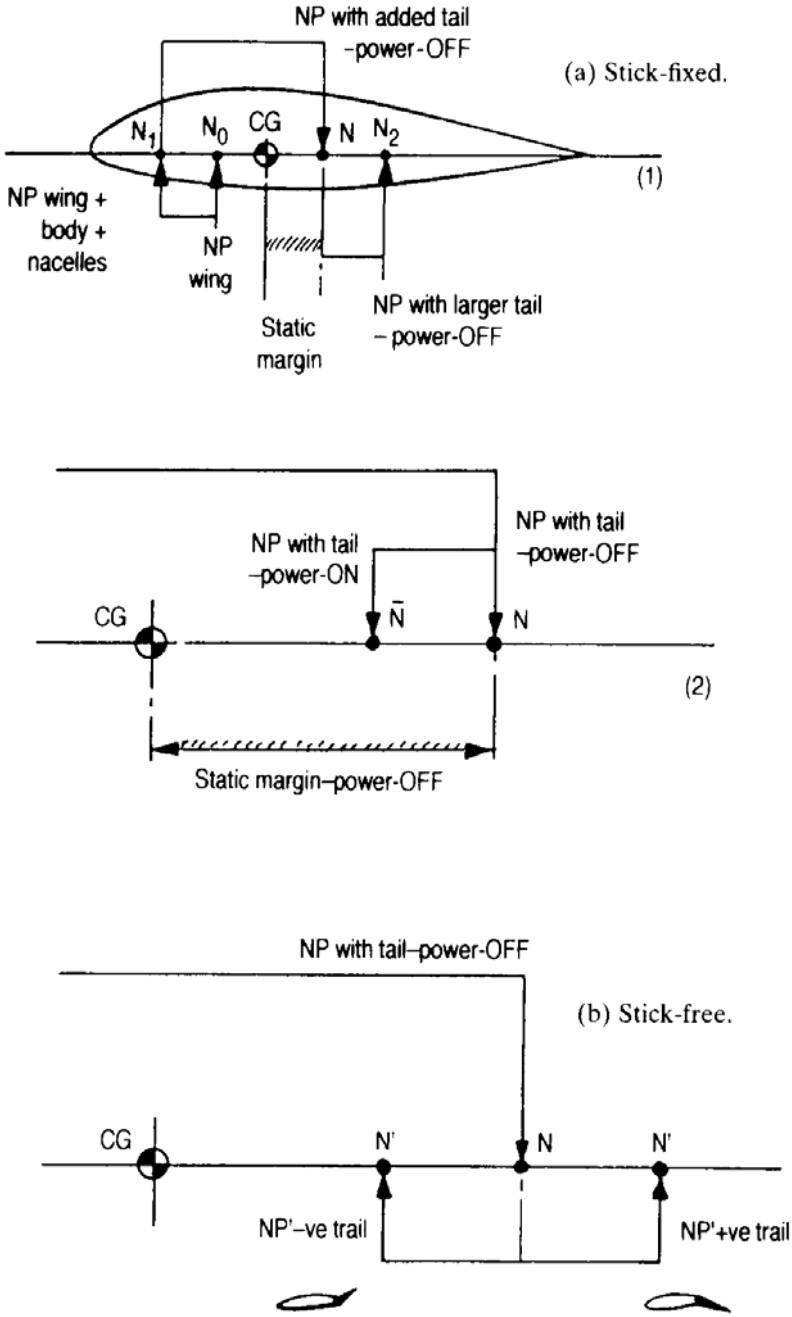

Fig. 8.8 Effects upon the **CG** (or static) margin, SM, and therefore upon the longitudinal stability of fuselage and nacelles, power (propwash) and control deflection (stick-free) (after S. B. Gates (1940)).

The conditions shown in Fig. 8.9(a) and (b) represent a tailed aeroplane encountering a ‘sharp-edged gust’, which alters the wind axis momentarily. For the aeroplane to be stable, i.e. to pitch nose-down into the relative wind the moment of the tail-lift about the **CG** must be greater than the sum of the wing-lift moment and the moment about the aerodynamic centre of the wing. Reducing all forces and moments to dimensionless coefficients, and remembering that, for many purposes, the slope of the lift curve is constant up to the stall, a family of curves of C_{Mcg} may be drawn against C_L for a variety of **CG** positions. The aeroplane is said to be in trim when the C_{Mcg} is zero.

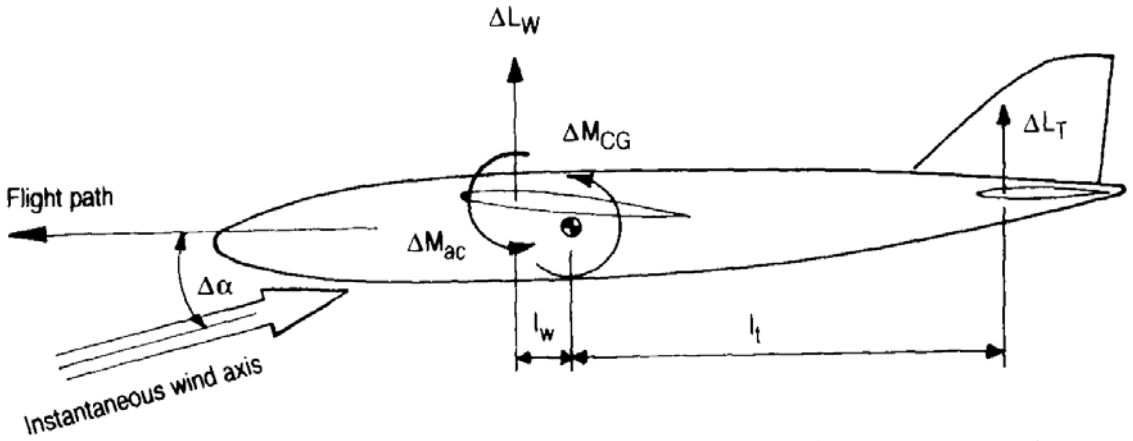

(a) Effect of 'instantaneous' change in angle of attack upon aerodynamic forces and moments (drag and pitching moment about aerodynamic centre of stabilizer neglected).

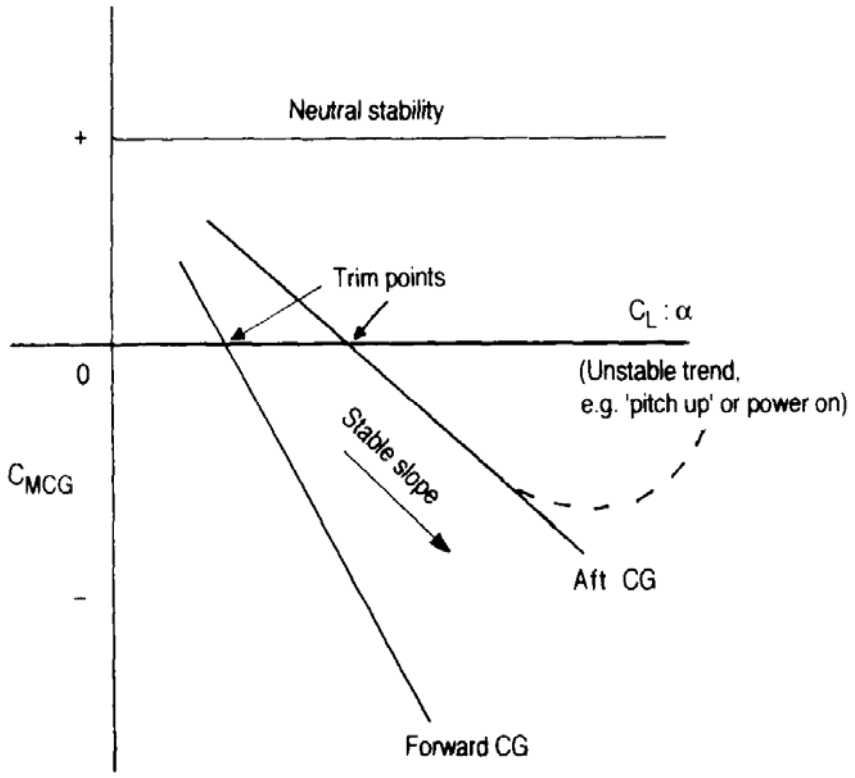

(b) Mathematical statement of what is meant by static longitudinal stability. This is present when the curves of C_{Mcg} with increasing angle of attack and lift coefficient, C_L, have a negative slope, as shown.

Fig. 8.9 Static longitudinal stability.

Table 8.1

Power and flap combination (i.e. slipstream and circulation)	Horizontal tail-volume $\bar{V}$ (Eqn 8-2)		
	Fighter	Transport and bomber	All-moving (slab) tail
Propeller-driven, high-lift flaps	rare	0·85–1·2	not used
Propeller-driven, simple flaps	0·35–0·6	0·5–0·9	not used
Jet, high-lift flaps	0·3–0·4	0·3–0·65	about 0·3
Jet, simple flaps	0·2–0·55	0·4–0·6	0·2–0·4

Centre of gravity margin and tail volume

Inspection of Fig. 8.7 shows that if the **CG** could be moved forward in flight — by pumping fuel from rear tanks to tanks further forward — the moment of the tail would increase in the nose-down sense. Moving the **CG** rearwards would decrease the moment of the tail, while increasing the destabilizing moment of the wing. The moment about the **CG** is stabilizing when negative, i.e. the convention assumes that a negative moment causes a reduction in total lift. Conversely a positive moment increases lift.

The larger the surface of the tail the larger the tail moment, and the further aft the **CG** might be arranged to lie without the aeroplane becoming neutrally stable. The distance through which the **CG** might be arranged to move before the neutral point is reached is called the static margin. It is so called because aircraft are structurally elastic and distort when subjected to aerodynamic and other forces. When discussed in theory and assumed for convenience to be rigid, we talk instead of a **CG** margin. Here, assume that they are one and the same. The product of the tailplane area and moment arm about the **CG** is called the tail-volume. The larger the tail-volume the larger the permissible **CG** margin. Transport aeroplanes, which must be reasonably flexible when it comes to loading, have large tail-volumes. Tail-volume is expressed as a coefficient in terms of tail area, S_T; wing area, S; wing mean chord, $\bar{c}$; and tail moment arm, l_t,:

$$\bar{V} = \frac{l_t S_T}{\bar{c} S} \qquad (8\text{-}2)$$

If the elevator is deflected downwards, then the stabilizing moment of the tail is increased and vice versa if deflection is upwards. It follows that control surface position (either elevator or all-moving tail) directly affects the **CG** margin. Controls are aerodynamically balanced: to make them easier for the pilot to move, and to make them trail in the right sense if the aircraft is disturbed when being flown ‘hands-off’. There are, therefore, other **CG** margins to be taken into account in practice: the static margins stick-fixed and stick-free, and the maneuver margins stick-fixed and free. They will not be considered here.

8.3.2 Conventional or canard stabilizers

It is very easy to imagine that a stabilizing surface behind a wing is somehow different from one in front. The distinction becomes less pronounced if we forget wings and stabilizers for a moment and group them all collectively as tandem aerofoil surfaces. The distinction between the leading and following surface depends then upon relative size alone. Even so, the leading surface is always seen as destabilizing by the one which follows.

The wing, in its position as the leading surface, generates a destabilizing moment about the **CG**, while the tail, as the following surface, is stabilizing. It is easy to see that a forward stabilizer, a canard, is destabilizing, when compared with a conventional stabilizer. However, as we have also seen from Fig. 6.6 there are times when one is forced to use a canard, if only for reasons of economizing on structure weight. The destabilizing effect of a canard is not in itself significant, for a proper positioning of the **CG** takes care of overall stability.

The attraction of a canard is that it lies clear of the wing-wake and, when high-lift devices are used on a wing (causing strong nose-down moments) the canard generates an upload that increases the overall lift. At supersonic speeds the rearward shift of the aerodynamic centre causes a strong nose-down moment and the upload of the canard used to trim out the moment contributes again to the overall lift, whereas a conventional surface must generate a download. The overall lift/drag of a canard aircraft can therefore be maintained more efficiently in supersonic flight.

Figure 8.10 shows the relationship between the leading and following surfaces and the **CG**. Note how the **CG** must be placed further aft as the following surface grows and the leader diminishes. Note too how the area (and therefore weight) of the fin surfaces grow with rearward CG position.

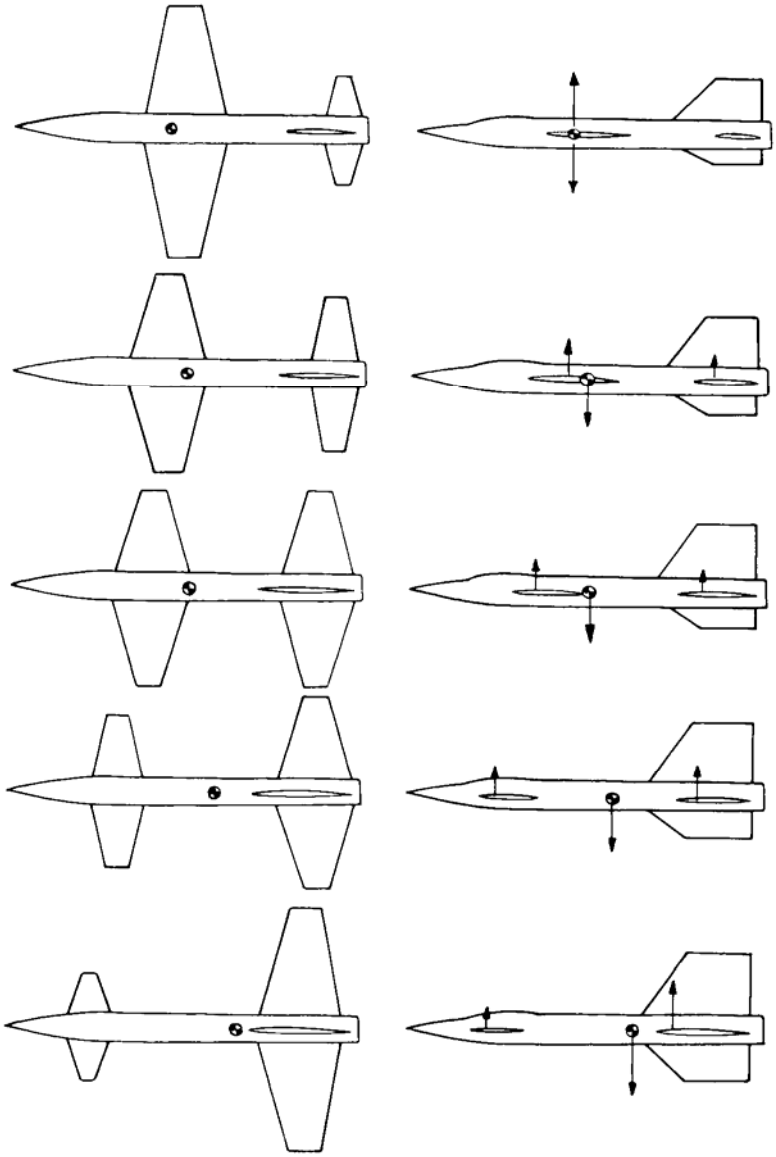

Fig. 8.10 Relationship between the canard, conventional stabilizer, and centre of gravity.

In some cases the use of a canard foreplane for trim and a rear tailplane for control is attractive. The canard trims both the aft shift of the aerodynamic centre at supersonic speeds and the strong nose-down moment from the high-lift devices at low speed with an uplift: important in both cases. At the same time control is kept in a favorable aft position. When not in use, the canard is arranged to float, i.e. trail in the relative airflow at the angle of zero lift, generating minimum drag.

Vertical displacement of surfaces

The aerofoil surfaces shed vortex systems that trail downstream parallel, more or less, with the relative wind. The conventional stabilizer, being smaller than the wing, has the relative airflow dominated by the wing vortices and operates in a large region of downwash. The canard, being smaller than the wing, has a much smaller vortex system. However, the smaller system still affects the airflow over the wings: when the aircraft is yawed, for example, the vortices may sweep across the span asymmetrically, from one side to the other. The result may be unpredictable rolling moments that vary with airspeed and attitude. Ideally the canard surfaces should lie above the plane of the wings, so that an increase in angle of attack and, hence, the strength of the shed vortices, is countered by a greater displacement between the canard and wing in the vertical plane.

Similar arguments apply to the vertical position of a conventional tail. A tailplane set on top of a fin, as shown in Fig. 7.9, dips deeply into the wake from the wing as angle of attack is increased. The downwash from the wings tends increasingly to reduce any stabilizing upload from the tailplane, so that the slope of the C_{Mcg}/C_L curve becomes shallower and, hence, increasingly unstable. With a very low aspect ratio wing the shed vortices may generate such a strong downwash that at large angles of attack the aircraft ‘pitches up', i.e. increases its angle of attack uncontrollably.

A low-set tailplane becomes increasingly more efficient with increasing angle of attack, for the vertical displacement between surfaces is increased. Pitch-up is a phenomenon affecting backward-swept wings, caused by the tips stalling before the roots and the lift remaining over the inboard portions of the wings (which

lie predominantly ahead of the **CG**) generating an increasingly nose-up moment, which further aggravates the stall. The moment may become so strong that it overcomes the effect of the elevator control surfaces, forcing the pilot to take drastic action to regain control. One such example has been the need to force the stalled aeroplane into a spin, so that it pitches nose-down; spin-recovery technique could then be used to recover level flight.

Many high-performance aeroplanes have low-set tailplanes, some have even had tailplanes canted downwards to cure pitch-up (Fig. 8.11), an extreme example is the McDonnell F-4 Phantom of the US Navy. Vortex-generators and other devices shown in Fig. 6.17 are used in conjunction with tailplane position to ensure longitudinal stability with many modern high-speed configurations.

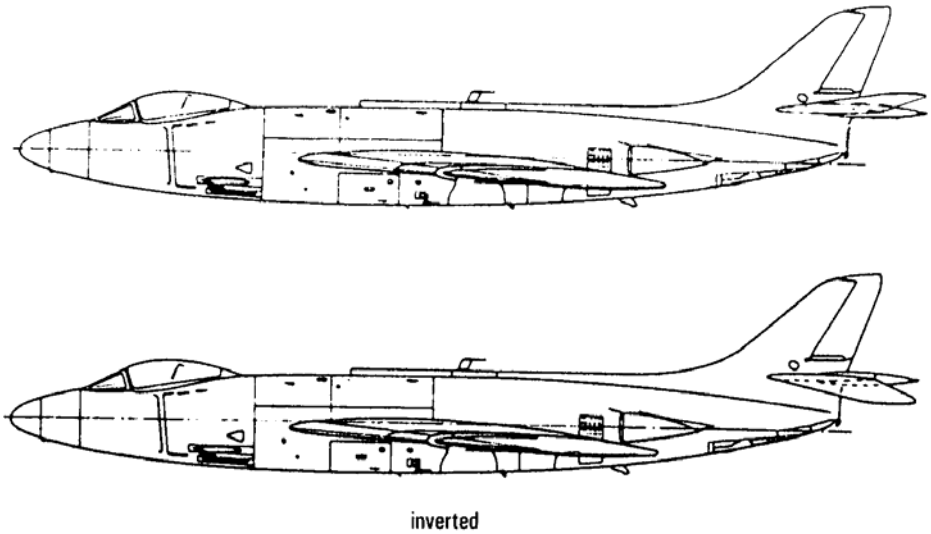

Fig. 8.11 Supermarine Scimitar F.1 had, among other modifications, the tailplane inverted to cure pitch-up. This was caused by shock-wave-induced separation of the airflow over the wing leading edges, leading to high-speed stalling of their tips.

(picture)
Plate 8.2 Extreme adjustment of tailplane position to clear adverse wing-wake at large angles of attack, thus improving control at pitch-up. McDonnell F-4 Phantom (USA, 1955).

8.3.3 The tailless aeroplane

It has not been common practice to design tailless aeroplanes for flight at low subsonic speeds, although a few experimental machines have been tried in the misguided attempt to reduce drag. In fact such tailless aeroplanes cannot employ high-lift devices, because of the short control moment arm, and larger wing areas have been needed to reduce the landing speeds. Such increased wing areas have usually generated more drag than a separate wing—stabilizer combination.

It is apparent from Fig. 8.9a that at zero lift a maximum nose-up moment is required of a stable aeroplane. The argument follows from consideration of the relationship between C_L and airspeed, in the figure increasing C_L implies a decrease of speed, whereas decreasing C_L implies an increase of speed. At high speeds, beyond the speed at which the aeroplane is in trim longitudinally, the pitching moment M_{cg} must be positive to raise the nose, increase the angle of attack and thus decrease speed. At speeds below the trimmed speed a negative moment is needed to depress the nose and increase speed again. When this is the case the aeroplane may be flown hands-off, but it may hunt with a cyclic motion about the trimmed speed. Such hunting, called a long-period oscillation (or phugoid), is a common phenomenon with all aeroplanes.

The tailless aeroplane requires special wing geometry to replace the effect of a separate stabilizer. Figures 8.12 and 8.13 show how reflex camber, sweep and washout are employed to generate the required download well behind the **CG** with increasing airspeed.

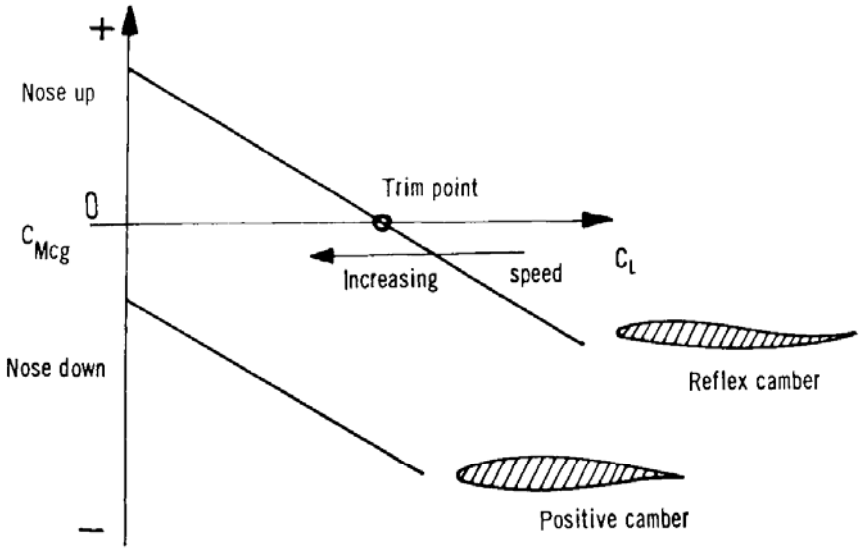

(a) Effect of camber upon C_{Mcg} of a regular planform.

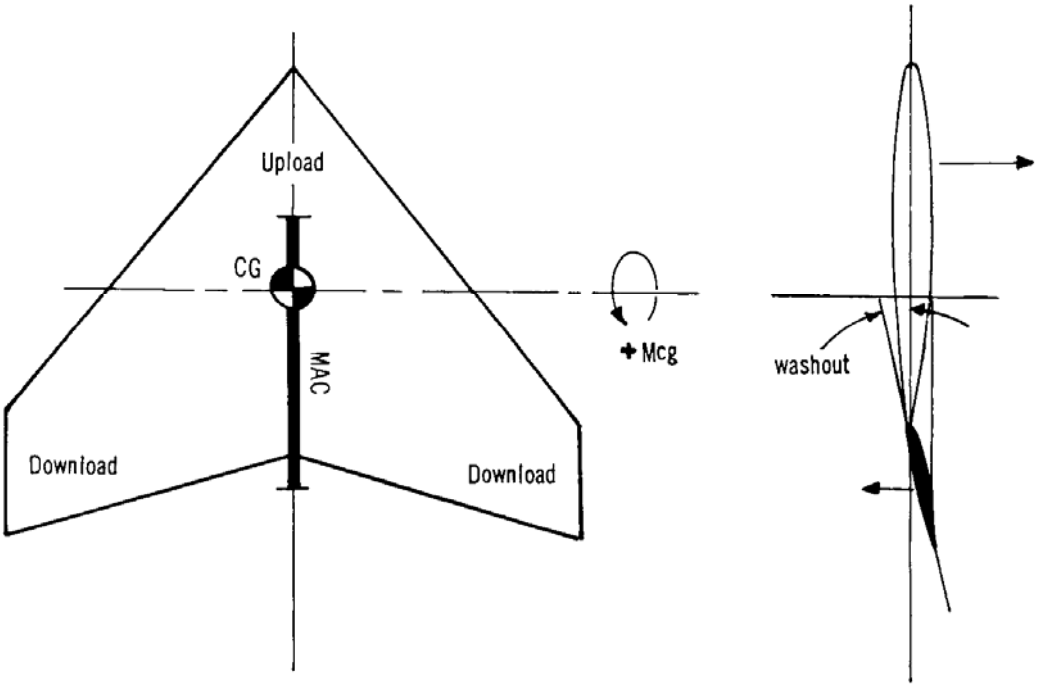

(b) Use of sweep and washout to produce positive C_{Mcg} with increasing airspeed.

Fig. 8.12 Balancing the tailless aeroplane by the use of reflex camber and sweep.

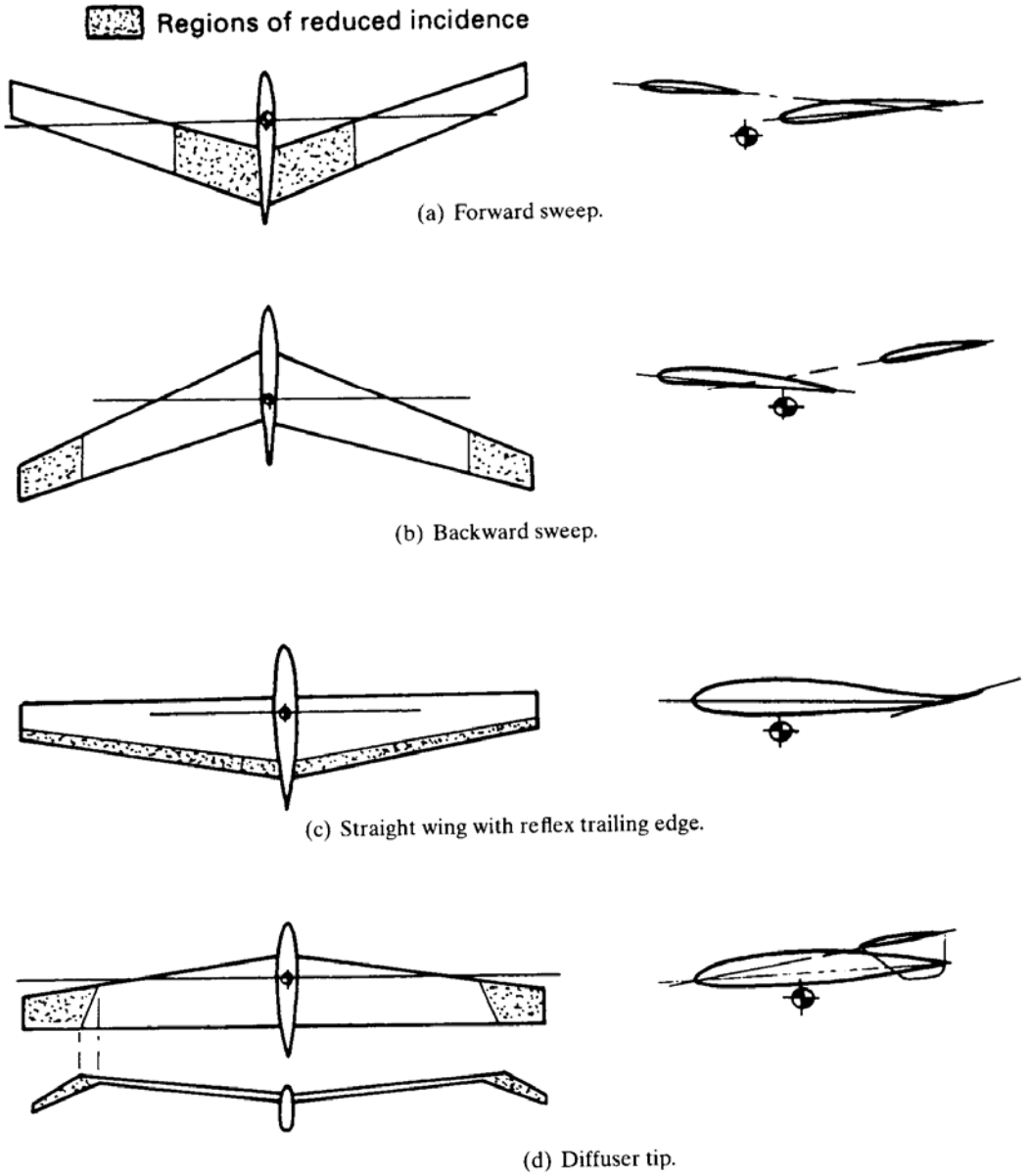

Fig. 8.13 (a)—(d) Stabilization of tailless aircraft by means of longitudinal dihedral, forming a vee, apex downwards between the areas ahead of the **CG** and those behind. This makes them trimmable within limits of **CG** which are real for the pilot, by providing a trim point within the working ranges of lift coefficient and airspeed.

The tailless delta has been employed for flight at supersonic speeds in recent years. The attraction of such a planform lies in the geometry: aerodynamically fine wing sections can be used that, because of the long chord, result in adequate spar depth and volume inside the wing. The long chord also results in trailing-edge control surfaces that lie well behind the **CG** with reasonably large moment arms. Trim drag is reduced by the use of **CG** shift in a number of cases.

The great spar depth and stowage volume inside the delta and even the swept wing has made the flying-wing transport aircraft an attractive proposition again. A number of design studies have been carried out to determine the optimum configuration for a low-cost air transport. Although nothing has yet been done in the way of building a machine, some idea of the relative sizes of aircraft for a job can be gained from Fig. 8.14, in which two tailless planforms are compared with a conventional classical aeroplane of similar capacity (see Appendix C). By spreading the payload across part of the span, inside a fairly thick aerofoil section, structural bending relief is obtained that is quite impossible when the load is carried inside a compact fuselage that pays only a small bonus in lift. The smaller the aeroplane for a given job the cheaper it is to produce, all else being equal.

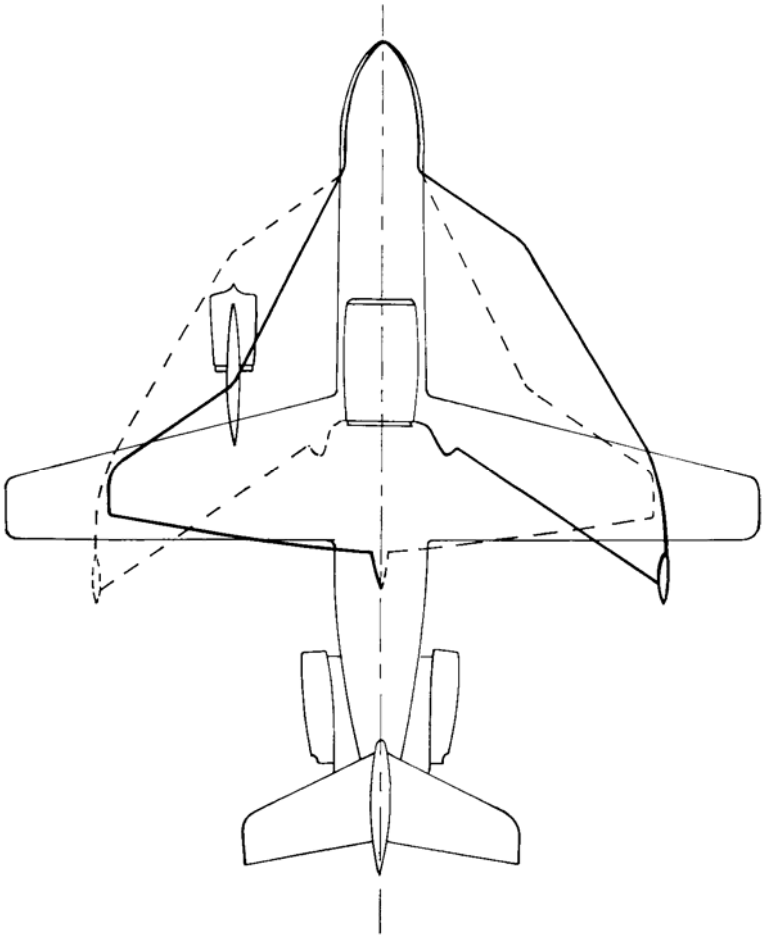

Fig. 8.14 These 3 tailed and tailless aircraft have comparable payload capacities.

Agility and the tailless fighter

Vectored thrust as a means of control is discussed later, in Section 8.7. Suffice it to say at this point that the aeroplane with a high-order automatic control system, without a tail, has less inertia in pitch and yaw than one with conventional tail surfaces. Not only have their masses been dispensed with, but so has the length of fuselage aft of the wing which is needed to support them at an optimized distance from the **CG**. Therefore, the ability we have now to provide force components in pitch, roll and yaw by means of the engine exhausts, coupled with reduced rotational inertias, quickens reactions and increases agility in maneuver. Further, aerodynamic tail-damping moments are reduced, enhancing liveliness of response to control.

A tailless aeroplane can have a much smaller radar cross-sectional area and weaker signature than one which is low-observable, but with a conventional tail. The low-observable limits for a conventional aeroplane have been reached; it is possible to go further with tailless aeroplanes.

It is also possible to reduce the parasitic drag elements (i.e. excluding lift-dependent drag components) by 1/2 to 2/3rds. This means less fuel is needed for a given task. As the wing is the major structural member, distribution of the weight, fuel and weapon load along the span results in proportionally larger bending relief and higher savings in wing structure weight.

The fractional weight of a tail was around 4% all-up-weight when Table 12-2 was originally constructed. Today, larger tail surfaces for supersonic fighters, including twin fins and rudders and additional structural joints, raise tail weight to nearer 7%, even with fewer control surfaces, hydraulics and actuators. A rule-of-thumb is that every unit of actual tail weight saved in pounds or kilograms reduces the weight of the remaining aeroplane by twice as much.

Because aircraft are purchased by weight, then being lighter and smaller the airframe becomes more cost-effective in those respects. There is then increased potential for flexibility in weapon-fit, avionics and role. However, electronics and control system costs increase.

8.4 Roll with sideslip and directional stability

A common error is to assume that the term lateral stability satisfies the definition of stability, given in Section 8.3.1: namely that if an aircraft is disturbed by a gust (or by the pilot operating its pitch or yaw controls), then it is stable if it attempts to return to its previously trimmed condition. This definition would mean that it will pitch or yaw in such a way that it ends up pointing into the new wind, from whichever direction it is blowing. Clearly this implies rolling into the new wind as well, which is something to be prevented at all costs if a spiral dive is

to be avoided. The danger of the spiral dive — the original killer — is that rolling in the direction of the new wind leads to the nose dropping and speed building up. Unless the pilot acts quickly to correct the situation the aircraft may be overstressed. To be laterally stable the aeroplane must do the opposite, it must roll away from the wind.

Let us look at this in detail to understand how roll with sideslip and directional stability are mutually dependent. Imagine an aeroplane to be flying straight and level before meeting a lateral gust. The gust causes a change of angle of attack in the X—Y plane, as shown in Fig. 8.15.

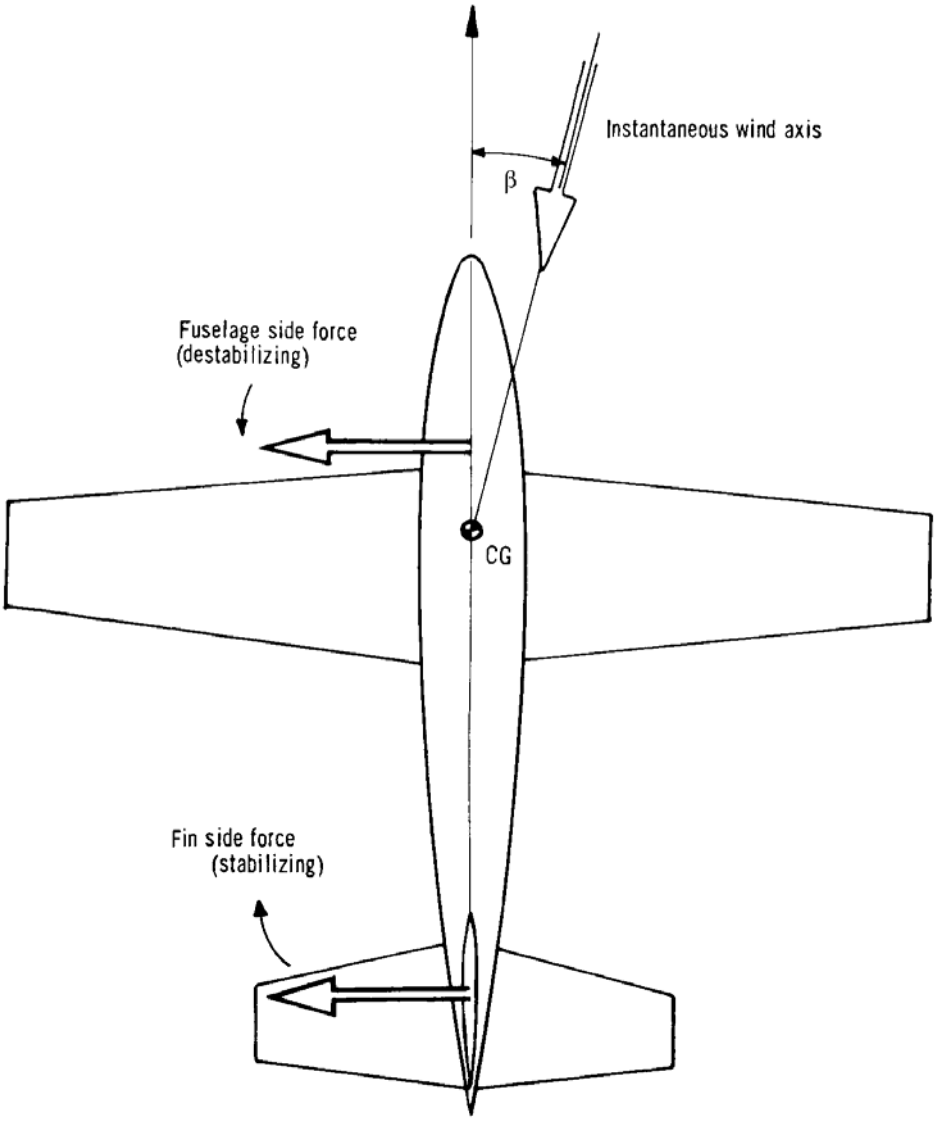

Fig. 8.15 Stabilizing and destabilizing moments of fin and fuselage in yaw.

The side-force generated by the fuselage usually acts ahead of the **CG** and is destabilizing. For the aircraft to possess weathercock stability (an early term for directional stability) the side-force generated by the fin and rudder acting as one unit must be powerful enough to overcome the yawing moment of the fuselage side-force.

Ideally the yaw should be corrected in such a way that the heading of the aeroplane is unchanged in space. However, if the nose merely swings round to point into the relative wind, then the heading will be altered by an angle roughly equivalent to the angle of yaw. In yawing the outer wing travels faster than the inner wing and generates more lift, so that (in this particular case) yaw is accompanied by roll in the direction of yaw. If the aeroplane is neutrally stable in roll, then a sideslip in the direction of yaw will follow, ending up in a spiral dive: the aeroplane constantly turning into a relative wind caused by perpetual sideslip. If directional stability is weak and the rolling moment is strong, then yaw will be accompanied by a roll away from the direction of yaw, a motion that reduces the sideslip and then reverses it. Resultant motion is an uncomfortable oscillation in roll accompanied by a cyclic yawing, to the pilot it gives the feeling that the aeroplane is slowly wagging its tail from side to side. Dutch roll, as the motion is called, is commonly experienced with aircraft with swept wings. Many such aircraft have grown separate fins beneath the rear fuselage to increase the directional stability and thus reduce the relative power of the lateral stability.

8.4.1 Dihedral and anhedral

When an aeroplane is viewed from the nose it will be noticed that the wings are set at an angle to the fuselage. If the wings are inclined upwards, the tips being higher than the roots, they are said to have dihedral. The reverse, with the tip set lower than the root is anhedral. Most low subsonic aircraft have dihedral, while aircraft designed for increasingly higher speeds have less and less dihedral. Many supersonic aeroplanes have anhedral. It is no accident that increasing anhedral is associated with leading-edge sweep and decreasing aspect ratio.

Figure 8.16(a) shows the simplest case of an aeroplane Sideslipping under the influence of a component of weight, W sin ϕ, where ϕ is the angle of bank.

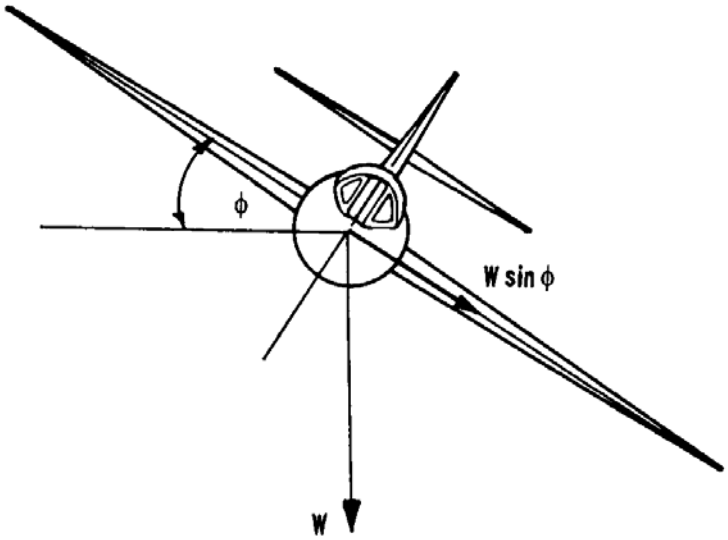

(a) Aircraft sideslipping.

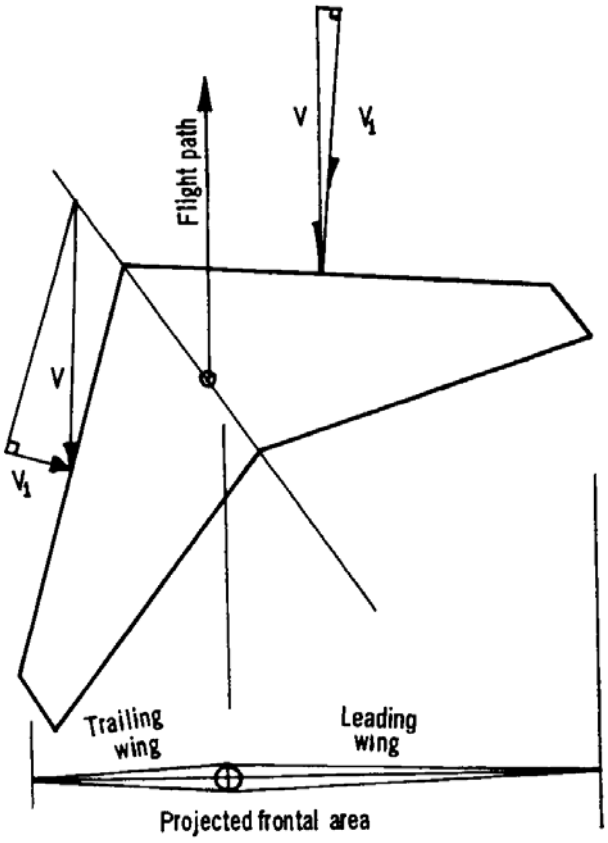

(b) Relative airflow normal to leading edges of swept wings when sideslipping.

Fig. 8.16 Effect of sweepback upon apparent dihedral.

It may be shown geometrically that if the wing has dihedral, then the wing on the leading side has a larger

angle of attack than the other. The result is more lift on the leading wing and a rolling moment away from the direction of slip that reduces the bank. Anhedral results in the leading wing having a smaller angle of attack than the wing on the trailing side, and a rolling moment is produced that tends to increase the angle of bank. It should be noted that low-winged aeroplanes have more dihedral (or less anhedral) than the high-winged varieties. The reason being that the **CG** of a high-winged machine lies below the aerodynamic centre and, rather like a pendulum, the low-set weight tends to hold the wings level. Put another way, the moments of lift and drag of a high-set wing, in acting above the **CG**, tend to roll the aeroplane upright.

A swept wing, such as is shown in Fig. 8.16(b), experiences a higher velocity normal airflow past the leading wing than past the trailing wing when Sideslipping. The lift of the leading wing is therefore higher than that of the trailing wing, and a strong rolling moment is generated. The greater the sweep or the larger the angle of attack, the more powerful the dihedral effect of a swept wing. For that reason anhedral is used to counter the dihedral effect of sweep. It should be noted, however, that the anhedral on the tailplane in Plate 8-2 is countered by dihedral outboard on the Phantom wing, even though the wings are swept.

8.4.2 The vertical tail

Determination of fin size is not quite such a straightforward problem as might be thought from its apparent simplicity as a surface, because the fin efficiency is affected by an unusually large number of ‘dirty flows’ from the airframe ahead of it. Fin size and dihedral of both wing and tailplane are correlated. Alteration of one invariably affects the efficiency of the others.

Straight-winged propeller-driven aeroplanes have vertical tail areas around 1/2 to 2/3rds of the horizontal tail area. The actual size is determined by the required yawing moment that must be generated when Sideslipping, and this in turn depends upon such important factors as asymmetric engine failure and the EAS. There is the further consideration of rolling moment caused by sideslip in relation to the yawing moment. The total rolling moment should be between 0.75 and 1.0 times the yawing moment caused by the same slip, but the fin contributes in turn to the rolling moment, and so does the wing position on the fuselage. A swept wing makes a favorable contribution to the yawing moment due to sideslip, as may be deduced from Fig. 8.16(b).

A high-set fin causes a lateral rolling moment with sideslip that augments the dihedral effect of the wing. However, as the angle of attack is increased, by a change of airspeed or change of altitude, the fin is borne deeper into the wake shed by the fuselage, so that the effectiveness of the fin is decreased. Dutch-rolling is most noticeable at height, where the angle of attack is increasing to maintain lift. It is also noticeable during steep climb-outs from airfields in the hotter parts of the world where air density is low. A fin set beneath a fuselage becomes more effective at large angles of attack (and works against dihedral) a fin above the fuselage is less effective.

The modern, clean, high-speed aeroplane requires a much larger fin than a slower aeroplane for the same role. Invariably there is not enough fin and, if the situation cannot be improved by the addition of strakes, then artificial stability (automatic rudder or fin deflection) must be introduced.

A fin surmounted by a high tailplane and terminating in a fuselage at its root is effectively borne between 2 aerodynamic endplates. As such the effective aspect ratio is increased and the fin becomes more powerful as a stabilizer. When the tailplane is set low one of the endplates is removed and the effective aspect ratio of the fin is reduced. Although the side-force generated by a low aspect ratio fin is less for a given angle of yaw than one of higher aspect ratio, there is less proneness to fin-stalling. As fin-stalling is inevitably catastrophic, fins are usually of lower aspect ratio than any other surface. The larger required area is accepted as a justifiable penalty. In many cases aeroplanes grow dorsal fin extensions during later development. The dorsal extension serves to reduce the fin aspect ratio. As shown in Fig. 8.17, it does not improve the effectiveness of the fin very much at small angles of sideslip, but it has very powerful anti-stall and stabilizing properties at large angles.

Aerobatic aeroplanes usually have a large portion of the fin surface lying ahead of the tailplane, or a large portion of the fin and rudder lying behind its trailing edge. This arrangement helps to avoid fin and rudder blanketing at large angles of attack during a spin.

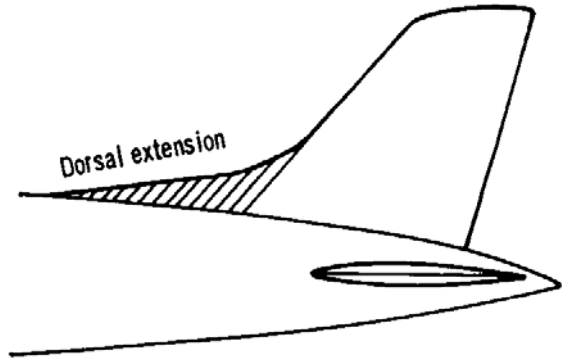

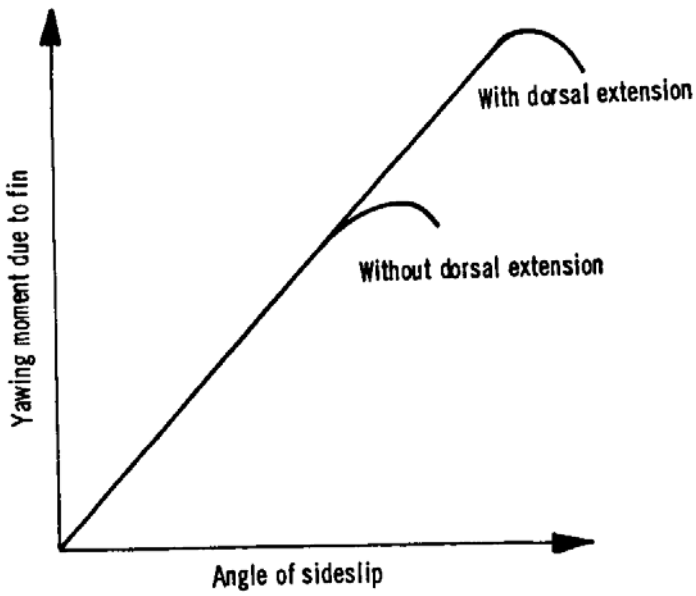

Fig. 8.17 Effect of a dorsal fin on yawing moment.

Lockheed Blackbird

The Lockheed A-12 was an advanced aeroplane, significantly ahead of its time. It was designed for stealth, exceptionally high performance and long range by the Lockheed 'Skunk Works', under Clarence L. 'Kelly' Johnson. Proposed in 1959, it derived from the earlier A-11, intended to reach M = 3.2 and an altitude at the end of its cruise of 97,600 ft, with a maximum range of 4,120nm (3,800nm at altitude). The A-11 incorporated unusual features: a long gooseneck forward fuselage, a rear-set delta wing, twin engines with reheat and spiked centre-bodies, and twin inward-canted fins and rudders. Quietly, in due course the A-11 was redesignated the A-12 by the company.

(picture)
Plate 8.3 Lockheed SR-71B, two-seater, designed in the 'Skunk Works' for stealthy reconnaissance at high altitude. This one, with two pilot stations, is now used for high-speed, high-altitude research into aerodynamics, propulsion, structures, thermal protection, materials and instrumentation. It is part of a program which, one expects, aims at a future supersonic transport program, in addition to supersonics and hypersonics (see also Appendix E).

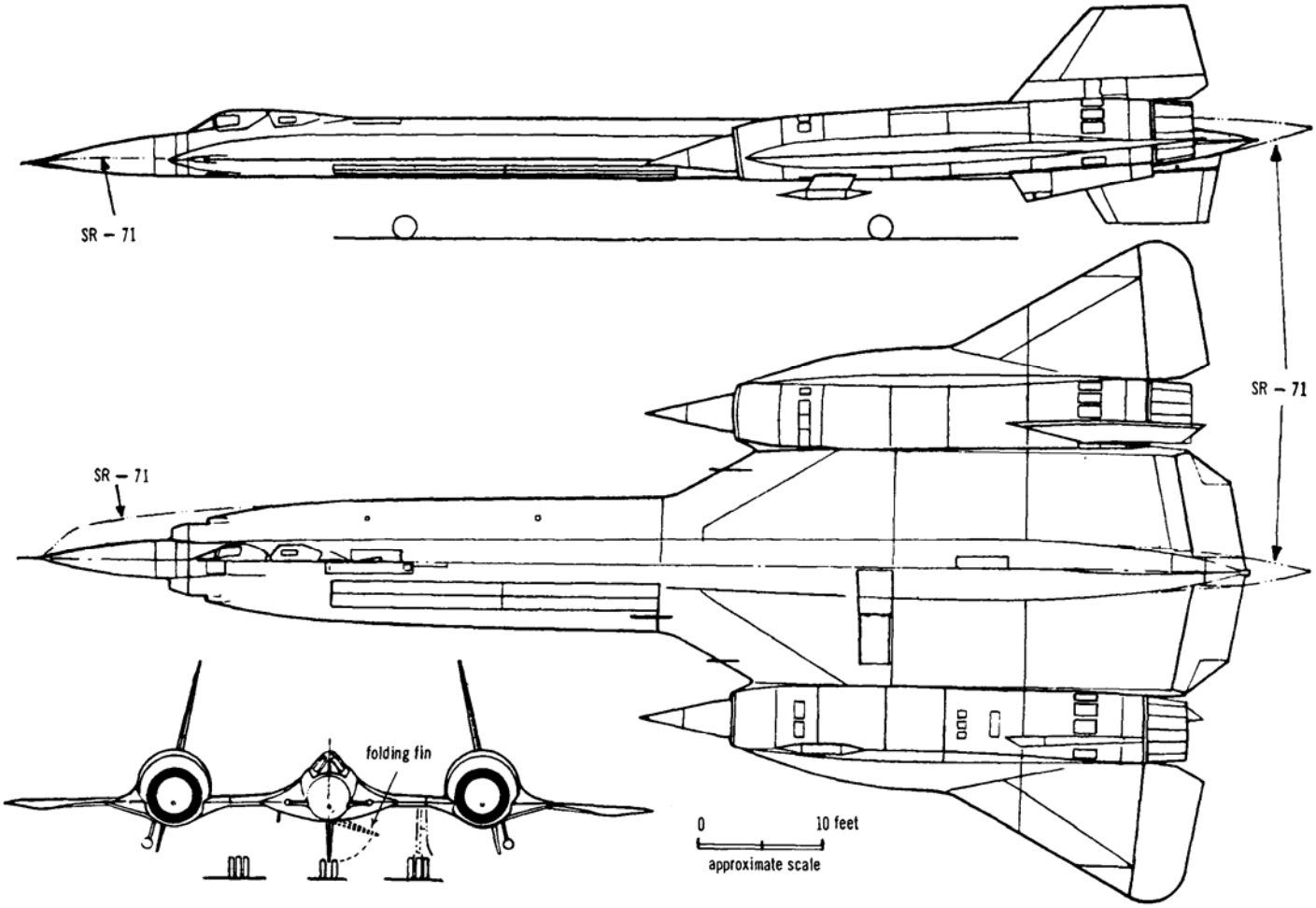

Fig. 8.18 The Lockheed ‘Skunk Works’ triple-sonic, long-range, high-altitude interceptor, YF-12, and SR-71, for stealthy reconnaissance. Both are mid-1960s developments of the Lockheed A-11/A-12 and are valuable research tools.

The A-12 revealed such potential, that in 1959 the airframe and powerplant combination was used as the basis for the YF-12 Blackbird, a two-seat, high-altitude, all-weather interceptor, able to reach M = 3.35, with a service ceiling of 85,000ft. In turn, a post-strike reconnaissance aeroplane, the SR-71 Blackbird, was developed, aimed at becoming operational in 1967. This aeroplane had sharp chines running forward to the nose, in place of the radome (Fig. 8.18).

The family of aeroplanes shared substantially the same configuration, marked by slender, lifting forebody and nacelles with sharp-edged lateral strakes running down their sides. Their twin fins and rudders were mounted on the engine nacelles, with an additional folding fin beneath the rear fuselage. Although the fins were canted inwards to scatter radar returns, it was found that they were affected favorably by the powerful vortices shed by the chines, such that the directional stability improved with increasing angle of attack. They also reduced the rolling moment with yaw (dihedral-effect), which if too powerful causes ‘Dutch-roll’.

Essentially tailless, nevertheless the chinned forebody acted like a foreplane, providing substantial lift by being set at a larger angle of incidence than the wings. This gave the wing the appearance of wash-out relative to the forebody. In fact together they were arranged so as to provide a longitudinal ‘vee’ between them: the surface ahead of the **CG** being set at a larger angle than that behind.

The ‘vee’ between the planes is a common aerodynamic feature in all aeroplane design with conventional manual controls, which need a real trim point for the pilot (see Figures 8.12 and 8.13). Usually it can be clearly seen in the geometry of a layout. Sometimes it is less apparent, because although the longitudinal 'vee’ is there aerodynamically, if the downwash behind a wing is particularly powerful, the tail-setting angle may be such that the geometric longitudinal dihedral can appear reversed. In the case of the Blackbird family, with powered controls and artificial stability, the apparent ‘vee’ appears to provide the lower aspect ratio forebody with more angle of attack than the wings, which have a higher aspect ratio, to optimize longitudinal lift distribution for maximum supersonic lift/drag ratio.

8.5 Control and non-classical (artificial) stability

Control is achieved by altering the lift of wing and stabilizing surfaces by changes in their effective angles of

attack, using flap-like (camber-changing) control surfaces, or by movement of the whole aerofoil, working as a slab surface. Doing so affects the way in which controls feel to the hands and feet of the pilot. Tables 8-2 and 8-3 apply to basic manual controls and give measures for sizing conventional surfaces. With the advent of computerized high-order 'active', or 'fly-by-wire' control, stability can now be provided artificially (non-classically) for aircraft which, without it, would be completely unstable.

Table 8.2 Further examples including controls

Surface	Symbol	Volume coefficient
Tailplane plus elevator	$\overline{V}_\eta$*	about 0·48
Elevator	$\overline{V}_\eta$	0·25 to 0·30
Fin plus rudder	$\overline{V}_f$	about 0·18
Rudder	$\overline{V}_\zeta$	0·90 to 0·11
Aileron	$\overline{V}_\xi$	about 0·40

*Compare with Table 8-1, where $\overline{V} = \overline{V}_\eta$

Fin plus rudder volume coefficient $\overline{V}_f = (S_f/S)(l_f/b)$ (8-2a)

Elevator volume coefficient $\overline{V}_\eta = (S_\eta/S)(l_\eta/c)$ (8-2b)

Rudder volume coefficient $\overline{V}_\zeta = (S_\zeta/S)(l_\zeta/b)$ (8-2c)

Aileron volume coefficient $\overline{V}_\xi = (S_\xi/S)(y_\xi/b)$ (8-2d)

in which l_f, l_η, l_ζ and y_ξ are the moment arms about the **CG** of the respective surfaces of areas, S_f, S_η, S_ζ , S_ξ.
Note: the suffixes depend upon the system of nomenclature and not the principle.

Table 8.3 Control surface area ratios

Surface area ratio	Stabilizer plus elevator		Fin plus rudder	Aileron
total surface area / wing area	ancient	0·10 to 0·17	0·03 to 0·06	
	modern	0·16 to 0·20	0·075 to 0·085	0·08 to 0·10
	canard	0·15 to 0·25		
control plus tab area / total surface area		0·50 to 0·55	0·50 to 0·60	0·18 to 0·30
balance area ahead of hinge / control plus tab area		0·15 to 0·25	0·16 to 0·25	0·20 to 0·25
control tab area / control plus tab area aft of hinge		0·05 to 0·10	0·05 to 0·10	0·04 to 0·06
aspect ratio / wing aspect ratio A	conventional about 0·66		0·18 to 0·30	1·00 to 1·30
	canard 1·20 to 1·50			

Ideally, operation of conventional controls should not alter the basic (classic) stability of an aircraft to which they are fitted. This is not always so. For flight at comparatively low airspeeds control surfaces are regarded as rigid. However, as speed increases aero-elasticity intrudes, causing them to deflect under load. Aero-elasticity is always destabilizing. Ailerons are normally located well outboard for economy of effort in roll. However as design airspeeds increase, and forces increase as speed^2, ailerons are mounted further inboard to reduce the risk of ailerons twisting the wing structure and thus reversing their effect. Spoilers are used on

many high-performance aircraft to avoid aileron reversal.

Figure 8.19 shows some types of lateral control. As shown in Fig. 8.19(a) the F-105 used conventional ailerons at low speeds, where spoilers are least effective, but relied upon the spoilers at high speeds without recourse to ailerons. The moving wing tip in Fig. 8.19(b) has attractive features, for it has the advantages of a slab surface. It tends to be over-powerful at low speeds and, perhaps because of complexity of gearing, has only appeared very intermittently. The tailerons of the BAC—TSR. 2 shown in Fig. 8.19(c) (see also Fig. E.4(a)) were slab surfaces that moved either together, as pitch controls, or independently for additional control in roll. It should be noted that modern aeroplanes having large tail surfaces and small wings suffer rolling moments from moving fins. Such cross-coupling between control surfaces makes the problems of stability and control more complex than even before.

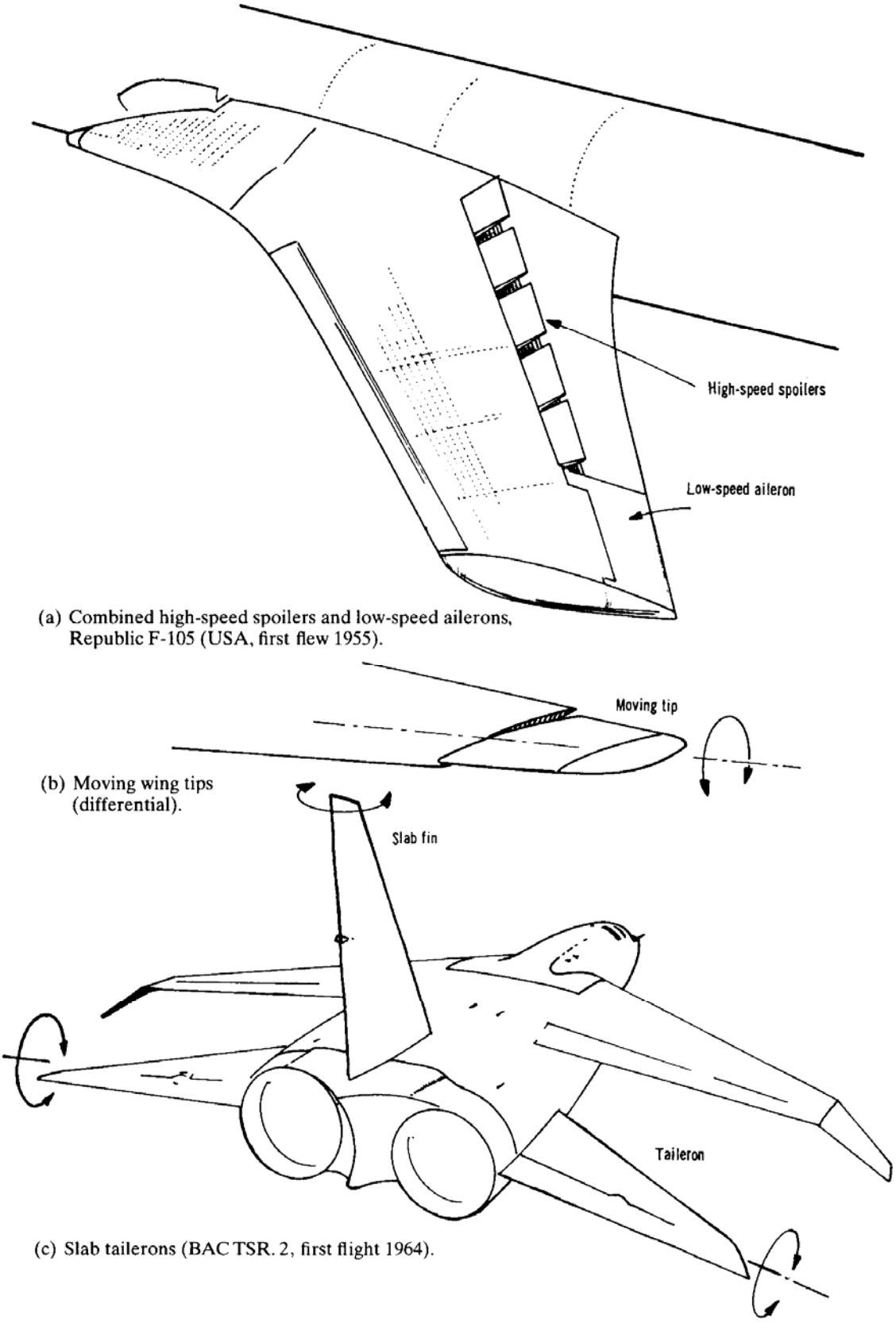

Fig. 8.19 Types of lateral control.

8.5.1 Balancing and harmonizing controls

With the exception of spoilers, flap and slab surfaces, in altering local lift circulation, experience opposing moments which are fed back to the pilot either directly or indirectly. The feel of a control system is of great importance, for control forces that are too heavy make an aeroplane tiring to fly, while forces that are too light may result in an aeroplane being broken in flight. The commonest devices for making control surfaces feel right are aerodynamic balances and tabs of various kinds.

Aerodynamic balance

Aerodynamic balance is achieved by hinging a control surface some way aft of its leading edge, so that a portion of the control surface area projects forward of the hinge-line. When the surface is deflected, part of the load in acting forward of the hinge introduces a moment opposing the moment caused by the load acting behind. As the moment caused by the load acting behind the hinge opposes control movement, that acting ahead assists the pilot. Too much area ahead of the hinge leads to control overbalance.

Trim tabs (balance and anti-balance)

Trim tabs are miniature control surfaces set in the trailing edges of control surfaces. Balance tabs move in opposition to the control itself: depression of a tab causes an upload at the control trailing edge, which helps the pilot to deflect the control upwards. An anti-balance tab is used when a control surface can be moved too easily. By moving such a tab in the same sense as the parent surface the moment of the surface about the hinge-line is increased. Tabs are moved by gears, to respond immediately when the parent surface is moved, or they can be operated by independent trimming controls in the cockpit. Trim tabs are used by the pilot in to reduce a control hinge-moment to zero, so that no force has to be tiringly applied by the pilot in steady flight.

Mass balancing

Control surfaces, in having mass, are affected by accelerations. If the **CG** of a control surface lies behind the hinge, then a normal acceleration will deflect the control surface relative to the main aerofoil: the control being apparently depressed by an acceleration upwards, and raised by downwards acceleration of the aeroplane. If such movement is not stopped it is possible to break an aeroplane, or at least to suffer dangerous fluttering of control surfaces.

Surfaces are dynamically balanced by weights, either built into horns, or suspended on arms ahead of the hinges. One such mass balance, in the form of a streamlined weight, is shown in Fig. 8.20.

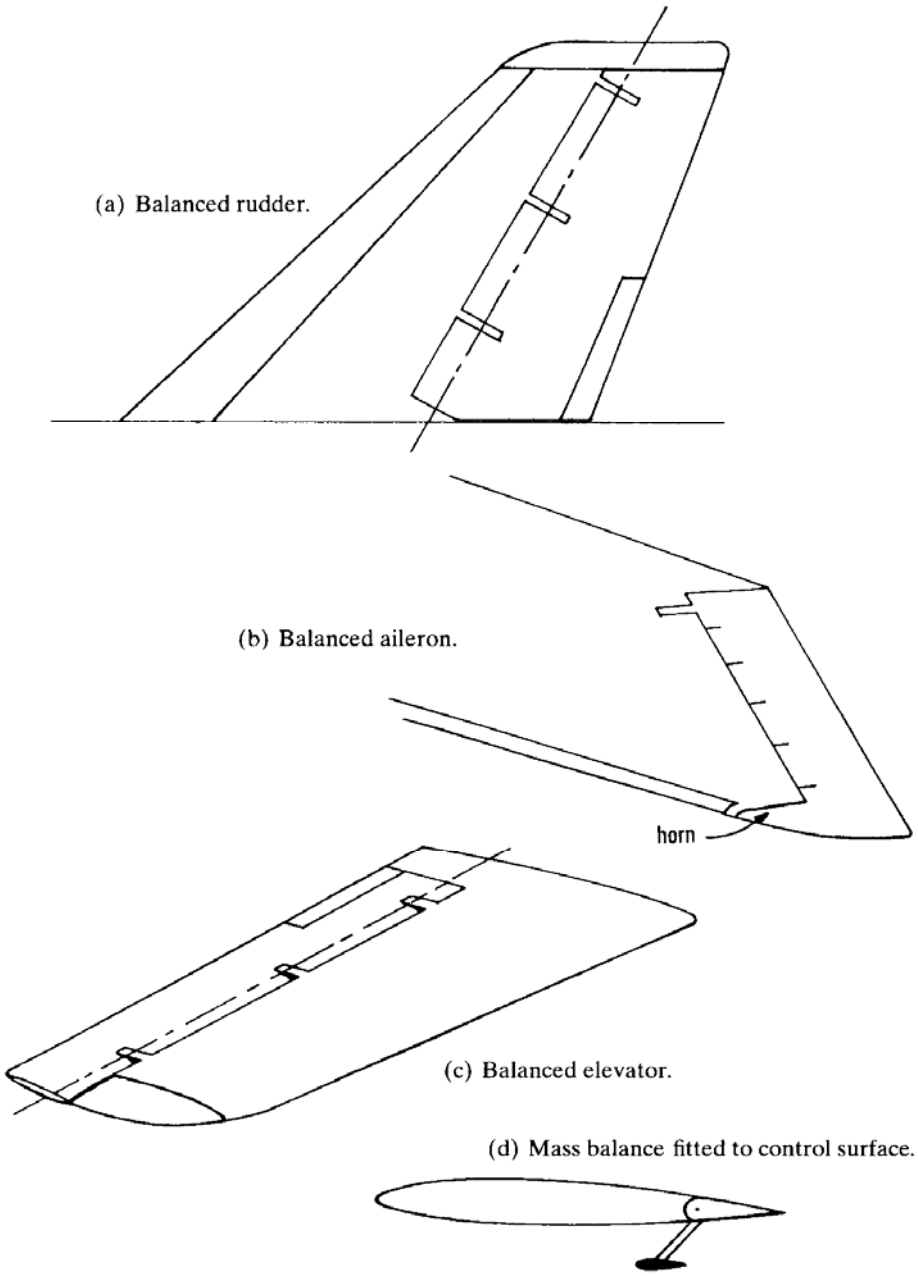

Fig. 8.20 Forms of control surface balance.

8.5.2 Flying control systems

Mechanical systems for moving the control surfaces are still basically the same as they have always been. Their increasing complexity has arisen from the combined effects of increased speed and size. Figure 8.21 compares two control systems: one simple and straightforward, such as might be found in a sailplane or light aeroplane; the other is more complicated for a moderately high-speed aeroplane. The second is recognizably similar to the first.

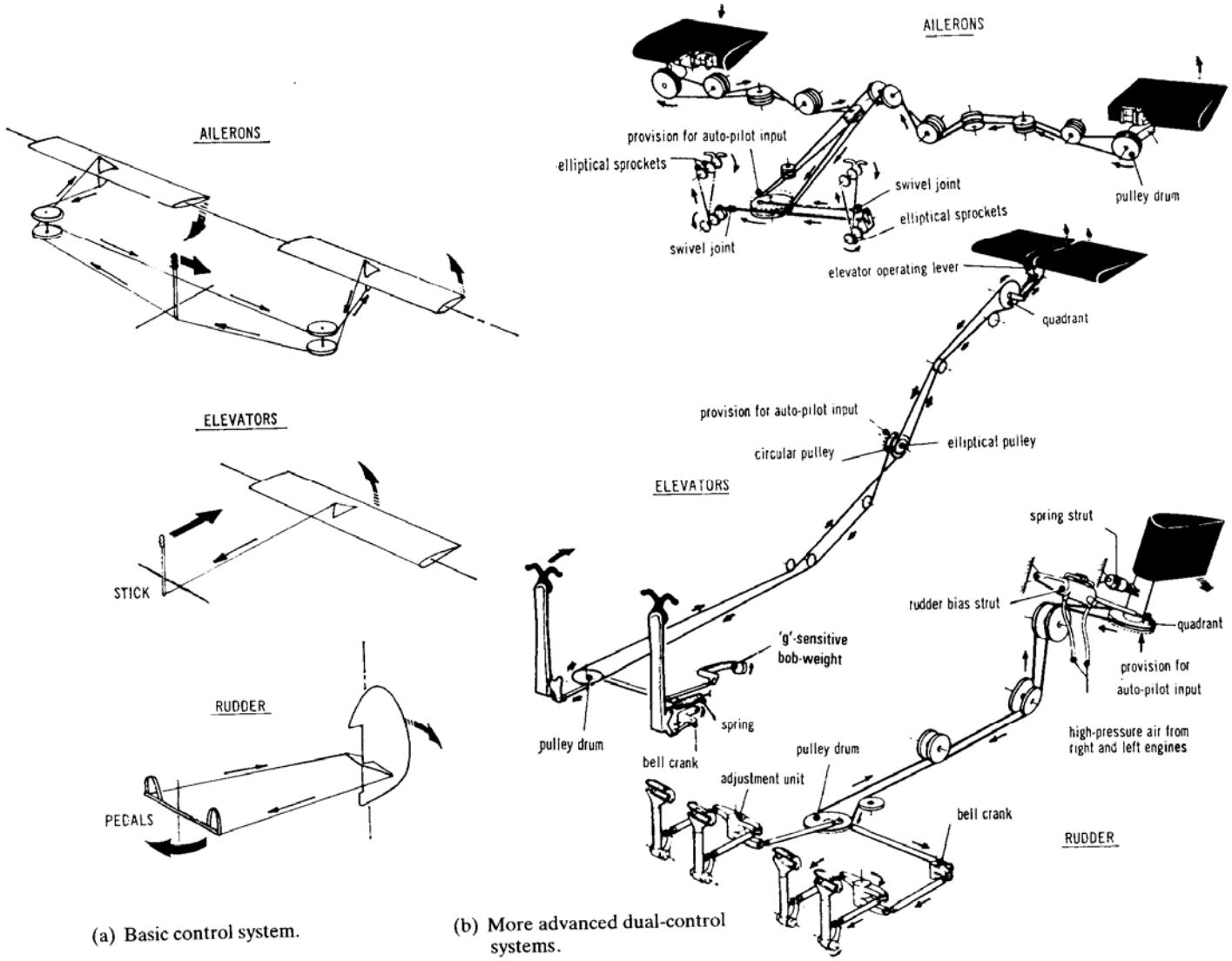

Fig. 8.21 Flying control systems, arrows indicate direction of travel for left aileron up, elevators up and left rudder.

A novel feature of the second system (for example the BAe 125) is the rudder-bias strut, which is a pneumatic ram with compressed air tapped from the engine compressor deliveries and fed to either side of the piston. Failure of one engine reduces the compressor delivery on the appropriate side of the piston, causing displacement and rudder deflection to counter the asymmetric yawing-moment from the live engine. The feature represents power-assistance in a most rudimentary form.

If manual controls are to be retained for flight at high speeds it is necessary to use a higher degree of aerodynamic balance as aircraft size is increased. As the degree of balance is increased the net hinge moment becomes more sensitive to manufacturing tolerances. Furthermore, because of the non-static nature of shock waves, compressibility can vary hinge moments very rapidly with slight changes of airspeed and control-surface deflection. At high speeds it becomes impracticable to use manual controls and fully powered controls (or at least power-assisted controls) must be fitted.

Powered controls employ rams, or servo-units, to move the surfaces. The control-column and rudder-pedals become power selectors, moved by the pilot to provide power to one side or other of pistons which, through a system of linkages, in turn deflect the flying controls. Most power controls are hydraulic, but work is being done to improve the reliability of electrical systems for advanced aircraft. With such systems it is now possible to save valuable cockpit space, replacing the traditional stick and rudder-bar with switches on an armrest of the seat. Pilots, however, are conservative by nature and several attempts to replace stick and pedals with smaller levers or switches have been resisted. It should be noted that there is good sense in such conservatism, for some change that might look sensible on a drawing-board could well cost lives in the isolation of a cockpit, with several things going wrong at the same time.

It is worth noting that servo systems of all kinds, designed to aid the pilot, introduce instabilities of their own. These are treated as part of the whole stability problem of an aircraft.

8.6 Aero-elasticity

Aerodynamic and inertia loads are resisted by the airframe structure, which possesses a measure of strength

and a measure of stiffness. While it is comparatively easy to build a small aeroplane that is both stiff and strong, large aeroplanes tend to be strong without being stiff enough, they are ‘floppy’ and much of their structural weight is there to meet the stiffness rather than the strength requirements. The resilience of a structure leads to flutter problems that are discussed in Section 12.1.1.

All aero-elastic distortion, caused by aerodynamic loads bending the airframe, is destabilizing in its general effect. Swept wings suffer more from aero-elasticity than straight wings, while high aspect ratio surfaces distort more than those with low aspect ratio. Figure 8.22 shows the aerodynamic twist along the flexural-axis of a swept wing caused by bending alone, that results in a loss of incidence at the tip and aggravation of pitch-up.

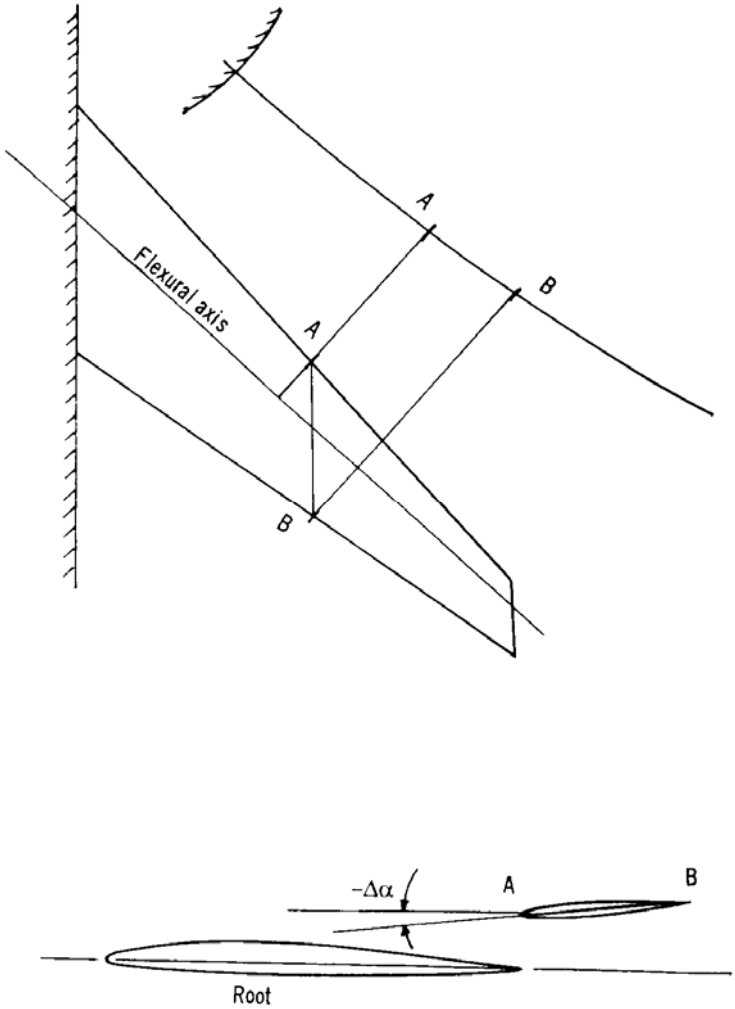

Fig. 8.22 Aero-elastic distortion of thin swept wing under load showing loss of incidence with bending, which decreases lift towards the tip and may lead to pitch-up when maneuvering.

The effects of aero-elasticity can be delayed, or reduced, by the use of podded engine installations, a common feature of many American airliners and bombers. The engines are, in effect, mass balances for the wings, placed along the span in positions that are the result of compromise between design for asymmetric engine failure and wing stiffness. On the other hand, the unusual 'M-wing’, shown in Fig. 6.19(b) is designed to distort in such a way that the increased incidence due to bending of the forward-swept portions is equal and opposite to the loss of incidence of backward-swept portions of the wings.

If a fuselage is not stiff enough then movement of the elevator bends the fuselage, reducing the angle of attack of the tailplane and, therefore, the effect of the elevator. In a similar way, if a wing is not stiff enough in torsion then the pitching moments from the ailerons twist the wing in the opposite direction to aileron movement, reducing their effect. If the torque applied by the ailerons is strong enough aileron reversal occurs, i.e. the ailerons do not reverse direction, they twist the wing so far that it generates the opposite load to that required.

Aero-elasticity is readily apparent and usually appears early in the life of an aeroplane. However, when a machine is well-worn and has been hard worked all of its life slight tolerances in the joints can lead to effects similar to those described. This has probably been the reason for a number of aeroplanes being called ‘rogue’: an imprecise term for an aircraft that does not respond to control movements in the way that it should, when others of the same type are perfectly predictable.

8.7 Advanced (active) flight control systems

Control systems, either fully manual, power-assisted, or power-operated, which rely upon push-rods, bell-cranks, pulleys and power augmentation for the human hand and foot at high speed, are well proven in effectiveness. However, they are heavy and vulnerable to changing force gradients with changes of flight phase, and configuration. They can also be jammed by nuts, bolts, split pins and tools left inside them.

Automatic flight control systems isolate the pilot from the aeroplane. This has the advantage of giving him enhanced handling qualities of stability and control. Stalling can be avoided, or its consequences avoided. Overstressing can be prevented. A uniform stick-force per ‘g’ can be provided throughout the flight envelope. Data processing, digital computation, system multiplexing, fault toleration can all be provided by computer(s) linking pilot and flying controls by conduits and cables carrying laser or electronic signals.

Disadvantages exist, primarily at the interface between pilot and aircraft. There are marked difficulties being experienced in the conversion of airline pilots to airliners with advanced flight control systems. Learning — perhaps one should say relearning — times are longer than expected. Type conversions of pilots who, knowing their routes backwards in conventional aircraft, reveal difficulty in adjustment to glass (video-screen) cockpits, redesigned control layouts and procedures, and the flexible scope inherent in the new systems. There is difficulty in relating to such aircraft. Not only is there a mass of material to absorb on the ground, but airlines are recommended to convert their pilots during a considerable number of different training legs on company routes. The need is proven, yet there are airlines which refuse (as this is written) to take such a prudent step, preferring, it is said, to let flight-deck crews loose on an aircraft without adequate experience of its capabilities. There is alleged circumstantial evidence that this has caused at least one fatal public transport aircraft accident in Europe.

Active controls enable an unstable aeroplane to appear stable and wholly controllable to the pilot, because they are under the direction of the fully automatic flight control system. This can be disconcerting for self-confidence in oneself. The author knows from experience the need for enough manual reversion to enable pilots to remain current with live (‘hands-on’) handling, especially during stages of the terminal approach and landing.

8.7.1 Fly-by-wire (FBW) and fiber-optic (fly-by-light (FBL))

High-order (active) electronic control systems relying upon pilot inputs to a computer, which then operates control actuators via electric cables, or via fiber conduits which conduct light, has attractive advantages. Both use the spectrum of electromagnetic radiation, while differing only in wavelength and frequency. Not least among their advantages is the ability to connect the avionic and other navigational equipment into the system, so that the pilot exercises command and control with less risk of error. Add to that the ability to program the power and flight controls for automatic take-off, climb, cruise, descent and landing, and automated all-weather operation, unhindered by pilot limits, becomes a reality.

A practical advantage of such advanced control systems is that there is potential for reorganizing space within the cockpit, replacing the central control-column, stick, or aileron wheel by sidestick controllers, on the basis of one for each pilot. This leaves space ahead of each pilot for unhindered sight of the instruments. One digital FBW or FBL system in a large public transport aeroplane might feature 5 main computers, operating all of the primary and secondary flight controls by means of electromagnetic signals and hydraulic jacks. Pilot pitch and roll commands are transmitted through small sidestick controllers to two computers. These have what is called redundant architecture to provide safety levels which are as high, if not higher, than the mechanical systems they replace. The system provides flight envelope protection, to prevent the aeroplane being over-rotated into dangerous attitudes, so preventing structural and aerodynamic limitations from being exceeded. For example, if the pilot moves the pitch control fully aft, the aircraft will not exceed its ‘alpha-floor’ angle of attack, a safe airspeed above the stall will be maintained, and the throttles will be opened automatically to establish a safe climb. The system is programmed to make it impossible to exceed g-limits when maneuvering. If the pitch control is moved to full nose-down, the aeroplane will not exceed the maximum operating speed, in knots or Mach number. An attempt to over-bank, beyond 30^0, simply results in the bank angle returning to 30^0 when the sidestick is released.

A further step is to multiplex inertial systems which provide different normal and alternative control laws, in the form of g-demand in pitch and rate command in roll. If there is a multiplex system failure which removes attitude information from the pilot display, the system can be arranged to revert to a direct mode, in which control surface angle is directly related to sidestick position. Control of the rudder and tailplane angle is by means of rudder pedals and a manual trim wheel.

The final step beyond such automation is to remove the pilot, which it is seriously argued could eliminate risk of pilot error. In fact that would leave an aeroplane and its payload of high-value freight and passengers in the hands of an electronic moron, lacking discrimination and subject to the law of ‘Garbage-IN = Garbage-OUT’. It could also leave them as victims of equally dangerous engineer error without the safeguard of a pilot to redeem the situation.

Note: on this last point, in a little under 50 years flying, 16 of which were military, the author had three engineer-related technical emergencies: an engine fire, an engine flame-out, an oxygen failure. In more than 20 years flying as a civil airworthiness test pilot he had 13 forced or emergency landings, all due to engines and fuel systems being improperly prepared for the tests by engineers. Some of the flights could have ended badly (but did not) in which case they might then have been regarded as being due to pilot error. The roles of machine and man are complementary. Engineer error is every bit as dangerous as pilot error, although the term does not have the same common usage). This is one of the most cogent reasons for live 'hands-on' currency of a pilot, advocated earlier.

Vectored thrust

The use of thrust-vectoring to improve maneuverability is not new. There was a patent application by an engineer called von Wolff in 1944. Modern advances with computers, FBW and FBL, and engine configurations which enable thrust to be directed up, down and sideways, as well as fore and aft, have provided the aircraft designer with the tools to handle established degrees of freedom in new and flexible combinations. Tail surfaces can be eliminated, saving weight, wetted area and structural complexity. All that the pilot needs is for the engine(s) to keep running and the control elements, be they aerodynamic, or those which mechanically deflect the jet efflux for pitch, yaw and roll (when possible) to remain functional.

There are various techniques. For example, graphite fins or vanes working in the rocket exhaust were employed with the German V2s during World War II, and in subsequent postwar space programs. A three-paddle variant of the four paddles arranged around the nozzle of the F-105, shown in Fig. 7.8(c), bestow control authority and agility in maneuver by deflecting the turbojet exhaust of the experimental Rockwell/DASA X-31A EFM (Enhanced Fighter Maneuverability) demonstrator. The paddles are manufactured from carbon compounds.

(picture)
Plate 8.4 Rockwell/DASA X-31A EFM (Enhanced Fighter Maneuverability) research aircraft. For control at extreme nose-up attitudes the foreplane. engine intake lip, leading-edge flaps, trailing-edge flaperons, and three thrust-vectoring paddles attached to the rear nozzles, bestow agility. The paddles deflect the exhaust through 10^0 for yaw-control. They can also act as air brakes (see also Appendix F).

A primary cause of conventionally controlled aircraft accidents is the unexpected and uncontrollable departure from the desired flight path, examples of which are: stall-spin, pitchup, and inertia coupling in a rolling maneuver. These can result from lack of authority of the aerodynamic controls in the unusual attitudes reached during departures. Confusion and disorientation can result when resort is made to a recovery procedure which is apparently illogical and interfered with by the effects of surprise, and maybe subsequent panic. This can happen, for example, when caught out by an unexpected spin, when the pilot is out of spinning practice.

The effectiveness of thrust-vectoring is, of course, dependent upon engine, fuel system and control reliability. Given that its advantages are plain, because its mechanical control authority in unusual attitudes is independent of the peculiarities encountered when airflows break down over conventional aerodynamic control surfaces. Exceptional attitudes, achieving angles of attack in excess of 90^0, are attainable. Tumbling maneuvers, erect and inverted, are within reach, giving scope in air combat previously regarded as impossible. Pointing ability of the fore and aft axis of an aeroplane, without resort to roll and bank, is available again for deflection shots and setting angles-off in air-to-air and air-to-ground attack, as it was with much slower fighters and scouts long before jet aeroplanes came along, with their demand for vast volumes of sky within which to maneuver.

Aeroplanes designed to take full advantage of thrust-vectoring will be different in appearance from those now regarded as conventional. The area of greatest weakness as this is written lies in achieving vectored thrust authority in roll, which is the equal of that of vectoring in pitch and yaw.

Active wing

While control in roll by means of vectored thrust is not yet comparable with what has been achieved in pitch and yaw, resort to an active aero-elastic wing (AAW) appears to have potential. The technique is fraught with mechanical and structural complexity, and needs considerable research. The origin of the idea lies in the loss of lift/drag ratio and high lift-dependent drag which accompany the low aspect ratios of conventional fighter configurations.

Agility in maneuver involves high applied g. Load an aero-structure and, like any other, it deflects. Excessive flexibility normally spells trouble. Although conventional fighters with low aspect ratio wings are strong, they can suffer lack of stiffness. To build in enough stiffness introduces structural weight penalties.

During early test flying of the McDonnell Douglas F-18 the pilot is reported to have encountered control reversal, when roll control was applied at M = 0·6 at sea level. To roll to the right the pilot applied right aileron, putting the left aileron down. This twisted the left wing leading edge down, so that instead of rolling right the aircraft rolled left. The same happened when attempting to roll left.

Accepting but controlling the amount of twist occurring with aileron reversal, while ensuring that it is constrained by adequate stiffness, it appears possible to use small aileron deflections of up to about 5^0 to twist the wing through no more than half that amount, which is adequate enough at high dynamic pressure, *q* (see Eqn (1-5)). At lower airspeeds and dynamic pressures ailerons operate conventionally. Research must involve investigation at full-scale Reynolds numbers, high Mach numbers, angles of attack and in high-g maneuvers, if designers and pilots are to feel relaxed and confident in the concept. Added to that, fatigue-life investigation will be crucial.

Figure 8.23 summarizes schematically points covered in this chapter, in the form of an experimental project for a tailless, agile, stealth-technology research aircraft. Its features and flaws are discussed in Appendix E.2.2.

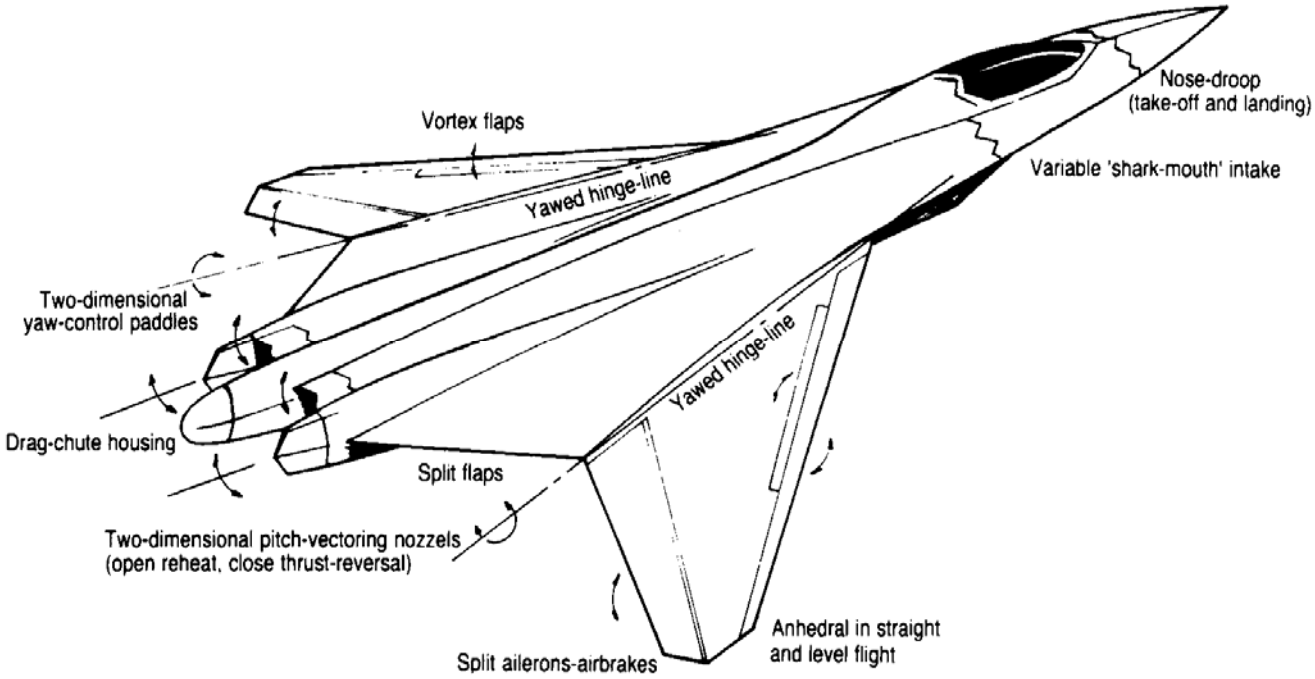

Fig. 8.23 Features of an experimental design study for agility and stealth. No conventional tail-surfaces. Thrust-vectoring for pitch and yaw control. Few reflecting surfaces and lines normal to other than transient lines of sight. Basic aircraft unstable. High-order multiplex aerodynamic and power control systems. Power-assisted manual ailerons for back-up if wing incidence-roll control by changing dihedral fails. Pitch-roll-yaw coupling tricky. Small and expensive!

Part 4 GROUND AND WATER OPERATIONS

Chapter 9 Landplanes

The undercarriage, or landing gear, serves a triple purpose in providing a stable support for an aircraft at rest on the ground, forming a suitable shock-absorbing device during landing, and acting as a rolling chassis for taxying. The undercarriage is deadweight in flight and much art is needed to retract it in such a way as to cause the least interference with the outboard and inboard profiles. The outboard profile is simply the shape of the airframe surface presented to the relative airflow. The inboard profile is the outline of the volume available for payload and equipment.

A complex retraction mechanism is heavy and there is much skill in making it light and simple, yet strong enough to absorb the shock of moderately heavy landings without breakage or strain of the surrounding structure. The rate of descent on touchdown should ideally be zero, but values up to 25 ft/sec must sometimes be allowed for. Naval aeroplanes present some of the worst problems, for the undercarriage must absorb the shock of a heavy, fast aeroplane flying straight onto the deck without checking the rate of descent (flare, or round-out), and the deck may also be rising to meet the aircraft as the ship pitches.

Superimposed on the need to absorb high vertical kinetic energies is the case of drag load caused by the rotational inertia of the wheel (moment of inertia about the axle) during the time of violent spin-up on touch-down. Further drag loads are caused by braking, while side-loads are caused by turning, lateral skidding and crosswinds. In cold weather there is the additional drag of snow and slush. In the worst design case a number of these things are allowed to happen simultaneously.

The number of wheels and tyre sizes are determined by the requirement that an aeroplane should be able to operate at maximum design take-off weight from both rigid and flexible surfaces, having specified load-bearing properties. The size of tyre and its pressure determines the ‘footprint’ area of contact with the ground. The load applied by a wheel is felt as a stress, a pressure, equal to the wheel loading spread over the footprint area. If a surface is soft or weak the surface stress must be kept low by increasing the number of wheels bearing the load. A number of small wheels can be stowed more easily than a large wheel having the same total footprint area, and they tend to be lighter, although no gain may be felt because of the need for more complicated and heavier retraction mechanisms. Current thinking is towards transport aeroplanes weighing more than 700,000 lb, carrying payloads of 200,000 lb (more than 350 and 100 short tons, respectively), with anything between 12 and 24 mainwheels, for soft-field operations. A possible design feature for such units will probably be tyres that can be partly deflated and inflated in flight, thus enabling the size of undercarriage-housing to be reduced. Undercarriages of the latter kind are sometimes called ‘high-flotation’ units.

The criteria in most common use for relating the maximum permissible weight of an aircraft to the size and number of wheels, and the pavement strength of the airfields from which it is to operate, are the load classification number, or LCN, and the equivalent isolated single-wheel load. These are calculated for a particular weight, undercarriage geometry and tyre pressure by the aircraft manufacturer. Most modern airfields have stated maximum LCNs for runways and pavements.

Wheels are disposed either in a tricycle arrangement about the **CG**, or in tandem as a bicycle arrangement, stabilized by small outriggers. Tricycle units may be either nosewheel or tailwheel variety.

9.1 The tailwheel undercarriage

The tailwheel undercarriage is one having two main units forward of the **CG** and one behind which, in very simple light aircraft, may be only a skid. At rest the aeroplane sits tail-down at an angle of attack slightly less than the stalling angle of the wings with high-lift devices extended. The arrangement allows the aeroplane to be three-pointed onto the ground with power off.

The tail-down attitude allows the pilot to use large aerodynamic drag to assist braking during the landing run, but has the disadvantage of a sloping floor that makes loading heavy objects difficult. The mainwheels lying ahead of the **CG** make the configuration prone to ground-looping, an uncontrollable spiral motion. The tendency is reduced by placing the mainwheels only a little way ahead of the **CG** (but there is then the danger of nosing over) or toeing them out slightly (Fig. 9.1).

Directional control is by differential braking, or by tailwheel or skid connected to the rudder. The tailwheel undercarriage has lower drag than the nosewheel variety and as such is most convenient for the simplest utilitarian aeroplanes.

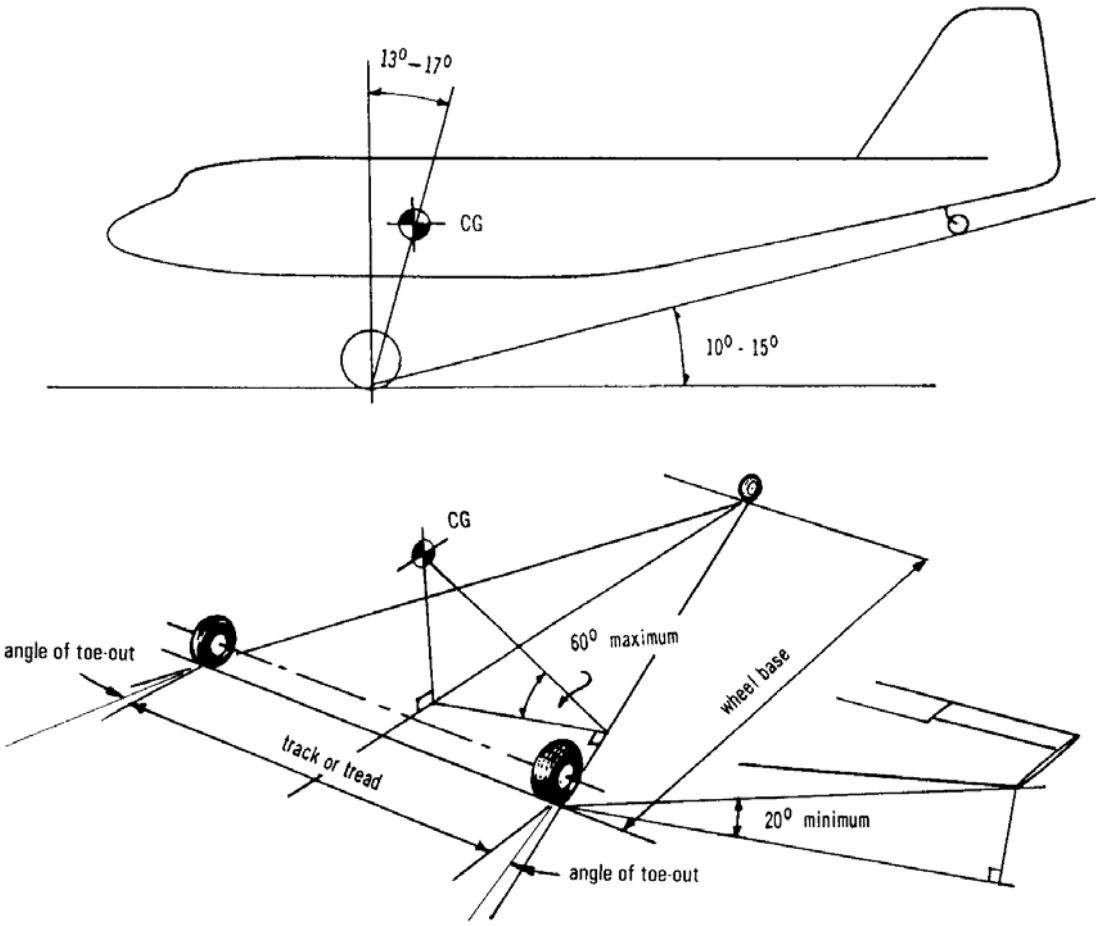

Fig. 9.1 The tailwheel undercarriage.

9.2 The nosewheel undercarriage

The nosewheel undercarriage is the commonest today. Ground-looping and nose-overs are eliminated, while loading is simplified by the level floor. Control is neatly achieved by differential braking with a castoring nosewheel, or by making the nosewheel steerable. Jet efflux is kept clear of the ground, where it can do the least damage. Nosewheel legs can be made extendable, to set aircraft at a large angle of attack for take-off, but this can only be done when the thrust/weight is high to begin with, to overcome drag. Tail brake-parachutes are easily employed.

The nosewheel undercarriage arrangement is shown in Fig. 9.2. Ideally the tail-down attitude should exceed the stalling angle of the wing, but jet aircraft with short undercarriages often require tail-bumpers. The **CG** position is such as to give a static nosewheel reaction between 6 and 15% of the all-up weight: heavy enough to prevent the aircraft tipping onto its tail, yet light enough for the elevator to rotate the aircraft about the mainwheels on take-off.

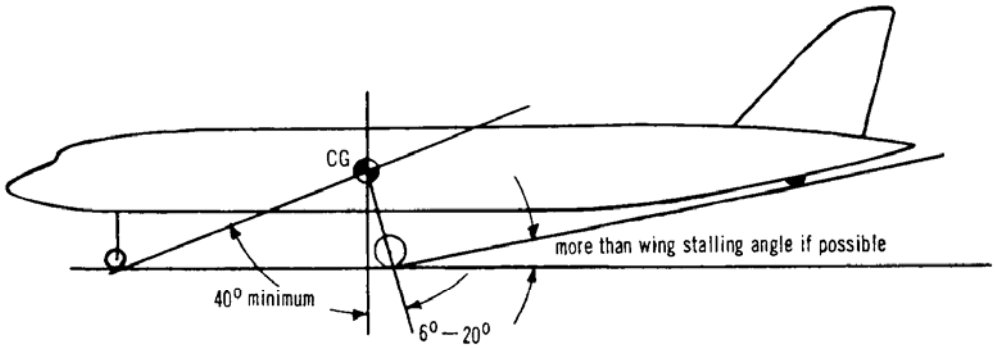

(a) Disposition of nosewheel undercarriage units about **CG**.

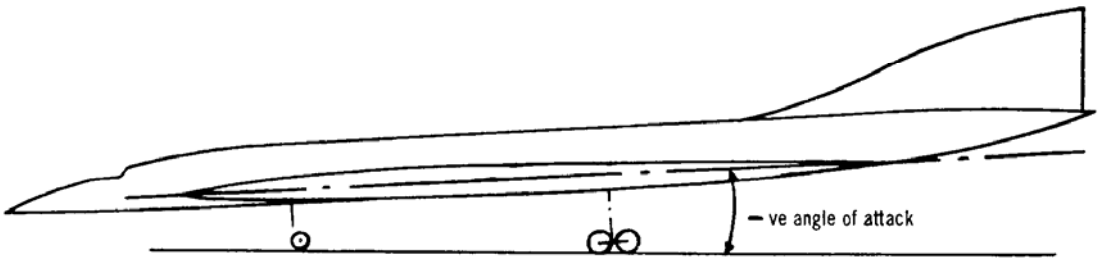

(b) Slender (low aspect ratio) aircraft with negative ground attitude.

Fig. 9.2 The nosewheel undercarriage.

Very slender aeroplanes with low aspect ratio wings will be found to employ nosewheel units that are shorter than the main units, giving a slight nose-down ground-attitude. The reason is that low aspect ratio wings cannot be stalled on landing, the stalling angles being well beyond possible aircraft attitudes. Therefore, to prevent dangerous ‘ballooning’ after touchdown the nose is dropped to give a ground attitude something less than the angle of zero lift. The aircraft is then held down aerodynamically. Rotation on take-off becomes more of a problem, especially with trailing-edge control surfaces on a wing, the large download required for rotation detracting substantially from the total lift. A canard becomes most attractive as a control surface under such conditions, and the canard plus rear tailplane combination mentioned in Section 8.3.2.

The slender aeroplane with its large pitching inertia takes longer to respond to elevator than the less slender and ‘normal’ classical varieties, particularly if the elevator control is aft of the **CG**. Undercarriage design must, therefore, take into account the effect of a late flare-out on landing that results in very high loads, for the **CG** is rotating about an instantaneous centre some way ahead of it and there is an added vertical component of velocity to be absorbed by the mainwheels. The situation shown in Fig. 9.3 may result in the pilot having the sensation of rising away from the ground in the flare, while the tail of the aircraft and main units are being broken off along the runway.

On both types of tricycle undercarriage adequate ground clearances must be allowed for propeller tips, with shock-absorber units fully compressed. The minimum clearance is about 6 in.

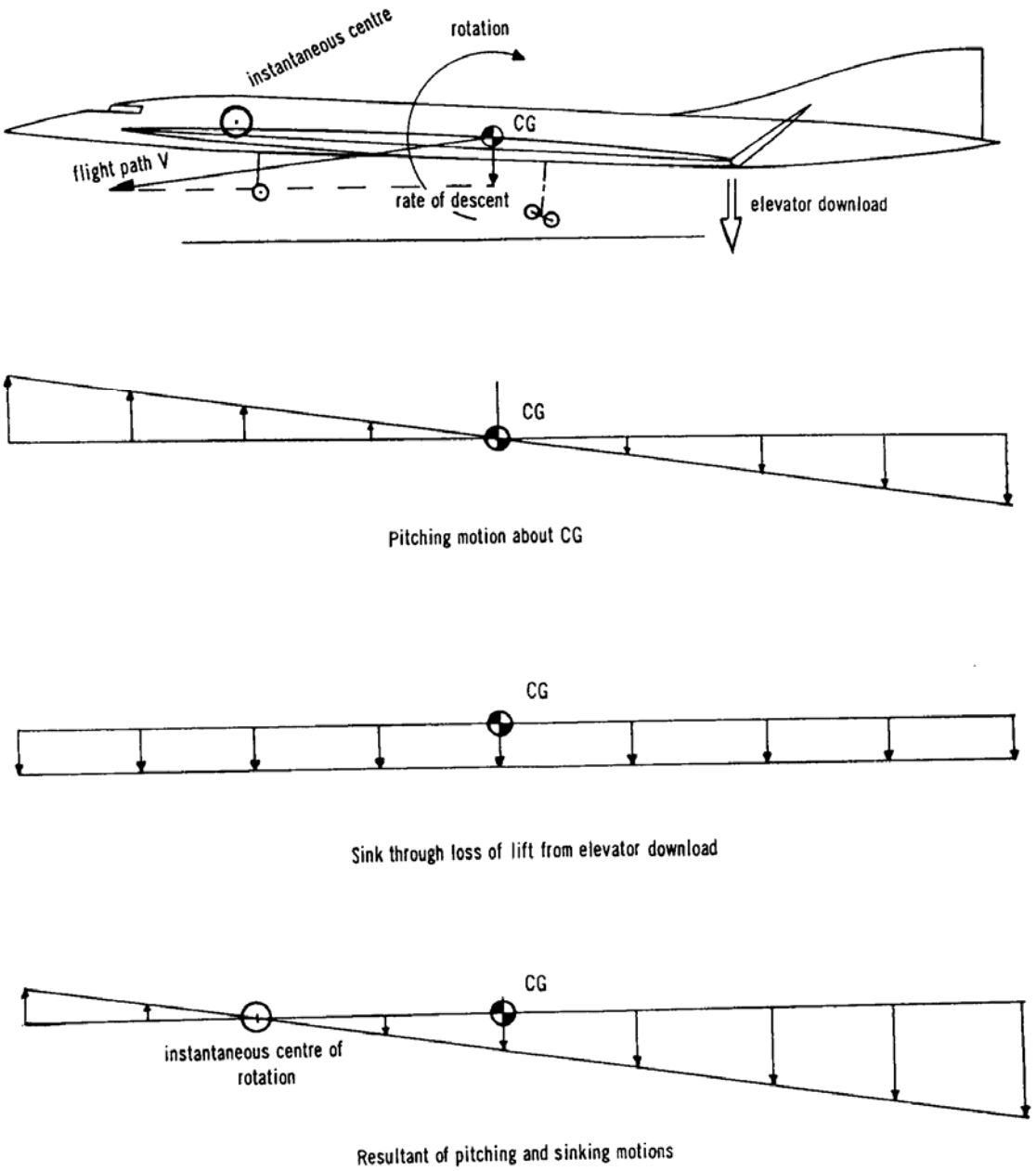

Fig. 9.3 Motion about an instantaneous centre, caused by coupling of rotation in pitch with rate of descent, when flaring for touchdown.

9.3 The bicycle undercarriage

The bicycle arrangement of mainwheel units in tandem has appeared sporadically on certain jet bomber, transport and special aeroplanes. The merits of such a layout lie in the low weight and drag of the units. The position of the main wheels allows little margin for variation of landing attitude, and speeds must be maintained within 2 - 3k. If the aeroplane is landed nose-high, the pitching moment of the **CG** about the rear wheels forces the nosewheels down with a high risk of bouncing. For equal, optimum-sized units front and rear the wheels should be placed at a distance from the **CG** equal to the radius of gyration of the fuselage in pitch. But if bouncing is to be avoided, i.e. if the pilot is to be given a reasonable margin of freedom in landing speeds for different weights and crosswind conditions, then the rear wheels must be as close to the **CG** as possible. The position of the mainwheels depends therefore upon a number of factors:

(1) Role and size of the aeroplane.
(2) Airfields from which it will operate: condition of runways and alignment with prevailing winds.
(3) Stowage available for undercarriage units: the layout is well suited to large aircraft with plenty of under-floor volume.

The bicycle undercarriage is mainly used on large transport and bomber aircraft operating from well-prepared airfields, although variations have appeared on the BAe Harrier VTOL fighter, the single-engined Lockheed U2 reconnaissance aeroplane, and Russian Yakovlev Yak—25 developments, for example.

A bicycle arrangement is shown in Fig. 9.4, in which the outriggers retract into wing-tip housings. As with the mainwheel units, the loads would be equal and a minimum for an outrigger-first landing if they could be placed at the lateral radius of gyration of the aeroplane.

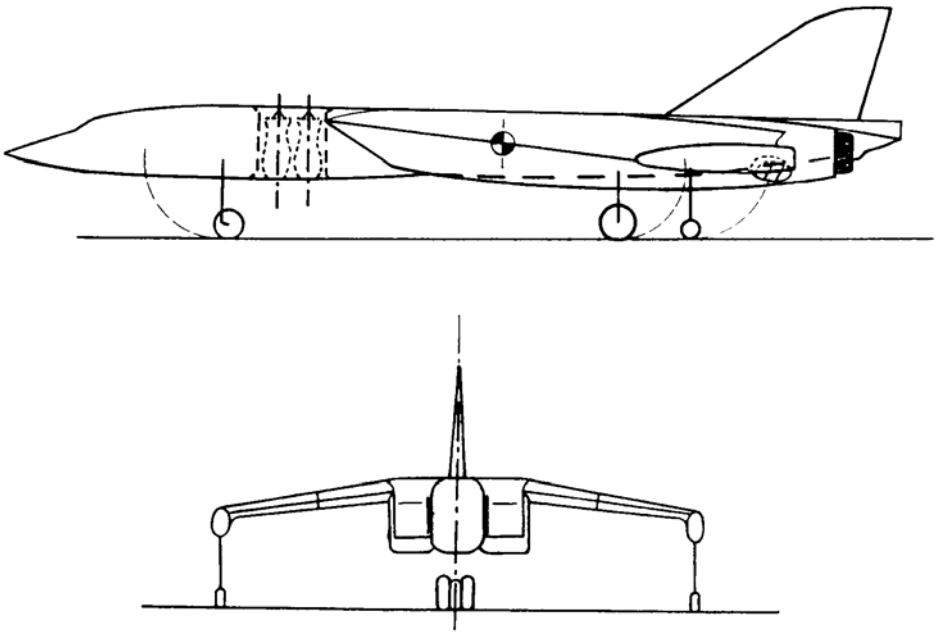

Fig. 9.4 The bicycle undercarriage.

In general, if units are placed at a distance less than the radius of gyration the gear touching first has the greater load. If they are placed outboard, or at a distance greater than the radius of gyration, then the gear touching last is the most heavily loaded.

9.4 Mechanical engineering

The engineering of an undercarriage may involve little more than the arrangement of an uncomplicated rubber shock-absorber in a fixed leg at the simplest end of the scale, while at the other may be the design of a complicated mechanism involving retraction movement combined with movement for shock-absorption, and sideways extension of bogies for increasing wheel-track. Shock-absorption methods are many and varied. The simplest involve bungee rubber chord for lashing axles to struts, rubber blocks or coiled springs working in sleeves. The commonest are based upon the oleo, or oleo-pneumatic principle, in which a column of oil, or oil and air is trapped in a sealed telescopic strut. Compression of the strut causes a piston to compress the liquid and pneumatic ‘springs’. High-performance aeroplanes use hydraulic power for flying controls and undercarriage operation. Hydraulic fluid may be used for shock absorption in the oleo legs, and leg length can be altered conveniently for different take-off, landing and ground-loading conditions.

9.4.1 Undercarriage retraction

Stowage of the undercarriage in flight poses some of the most complicated problems for both designer and systems engineer. Most propeller-driven aeroplanes have thick enough wings to house undercarriage units, or engine nacelles with enough volume behind the engine for wheel stowage. Actual movement of legs, wheels and linkages may involve much contortion. An example is shown in Plate 9-1 which illustrates the retraction cycle of a mainwheel bogie into a blister fairing on the fuselage of the Short Belfast.

(picture)
Plate 9-1 Belfast undercarriage retraction cycle.

Some of the early subsonic jet aeroplanes had thick enough wings for the tradition of wing-stowage to be continued, without much alteration in wheel and tyre size. Faster aeroplanes had much thinner wings, fuselages packed with engines, ducting, fuel and equipment, that necessitated the development of much thinner and smaller wheels with very high pressure tyres.

With the coming of the jet aeroplane propeller-clearance problems largely disappeared and undercarriage legs grew shorter and easier to stow. However, the slender low aspect ratio planform, with its ability to fly at exaggerated angles of attack without stalling, is now causing the undercarriage leg to grow longer again, to provide adequate ground clearance and long strokes for absorbing the energies involved.

An undercarriage generates considerable drag: with gear down the overall lift/drag of a high-performance aeroplane may be reduced by 20—25%. On a light aeroplane with a well-faired fixed undercarriage the drag may be only 12—15% of the total. Partially lowered mainwheels have been used as air brakes. Lowering an undercarriage often reduces the nose-down pitching moment caused by the flaps, because the disturbance reduces local circulation.

Most aeroplanes employ stressed (load-bearing) skins and the strength of such structures is reduced by cutouts, so that local stiffening is needed around wheel-wells. Ideally units are stowed where there is ample space, and stiffening can be introduced with the minimum penalties in structure weight. Wing leading edges, engine nacelles, and spaces beneath fuselage floors are used: all places where there are already adjacent spars, booms and frames forming reasonable attachments and stiffening. Special pods and blisters may have to be added to fuselages and wings when the configuration of an aeroplane does not permit the design of economical mechanisms.

9.4.2 Water, slush and ice

Heavy rain leaves standing-water on runways and the high ground speeds of modern aeroplanes have brought the problem of aquaplaning to the fore: a phenomenon in which the tyres are lifted hydrodynamically off the ground. Wheel arrangement and tyre size and pressure all affect the problem. A trailing tandem-wheel is less prone to aquaplaning than a leading wheel, because the leading wheel clears some of the water away. A low-pressure tyre aquaplanes at a lower speed than a high-pressure tyre of the same size, as shown by the empirical formula:

$$V_a = 9\sqrt{p} \qquad (9\text{-}1)$$

where V_a is the aquaplaning speed in knots, and p the tyre pressure in lb/in^2. A motorcar with tyre pressures of 25 lb/in^2 and reasonable tyre treads will aquaplane at 45k, say 52 mile/h. An aeroplane with a tyre pressure of 120 lb/in^2 will aquaplane at 100k, or 115 mile/h. If the treads are well worn then the aquaplaning speed is considerably reduced, with a consequent reduction in braking and steering.

Slush is a transient condition between standing-water and snow which drastically increases wheel-drag. The pitching moment of the wheel-drag about the **CG** may be high enough to prevent the elevator rotating the aircraft for take-off, while the slush drastically reduces the effectiveness of wheel brakes and steering. Bogie wheels in tandem cause less drag than a number of wheels in line abreast.

Braking and steering are consistently poor on ice, while water thrown onto undercarriage mechanisms may freeze hard enough in flight to prevent their operation after letting down from high altitudes. Some aircraft have required special heaters for undercarriage bays. Others merely have the undercarriage cycled up and down several times after take-off, to break up ice and blow away slush and water clinging to the mechanisms.

Chapter 10 Seaplanes

It is probably fair to say that the seaplane, in the form of the long-range flyingboat, was in a more advanced state of development than the landplane right up to the beginning of World War II. During the war the rapid development of the heavy bomber and the provision of long runways in many parts of the world favored the development afterwards of civil transports along the same lines. Whether or not the seaplane will reappear again as anything more important than it is at present is a matter for conjecture. Certainly, in their smaller sizes, flyingboats are extremely useful for fire-bombing, for example, in the South of France and Spain. Small floatplanes and flyingboats are used in large numbers in Canada, and there is a growing market in the tourist industries on the Australian Great Barrier Reef, and the islands of the Pacific and Indian Oceans.

The advantages of the seaplane lie in the argument that 75% of the Earth's surface is covered by water, all of it flat and most of it (neglecting storms and shoals) unrestricted for take-off and landing. Flyingboats can be built in larger sizes than landplanes, and they can be operated away from centers of population, so that noise problems would be small. Beriev, in Russia, was rumoured early in the 1960s to be thinking of a 2000 passenger flyingboat weighing 2,000,000lb (1,000 short tons) and cruising at 500k.

The disadvantages are that seaplanes cannot ride out the same rough seas as ships, and scheduled operations would be limited to coastal waters, rivers and lakes. Marine airports with good communications would have to be built. Loading and unloading and servicing pose considerable problems: no passenger wants to fly 4,000 miles to be made wet and seasick in the last 400 yards. Transport systems are geared to landplane operations in all developed countries. Seaplane lift/drag ratios are less than for equivalent landplanes.

10.1 Basic design requirements

The shape of the seaplane is a compromise to meet the following requirements:

(1) Buoyancy and static stability.
(2) Low water-drag, and the provision of hydrodynamic lift at low speeds to reduce the wetted surface as much as possible.
(3) Spray must be avoided or suppressed from reaching propellers, intakes and other vulnerable parts.
(4) Dynamic stability on the water.

(5) Maneuverability and control while taxying.
(6) Adequate performance and versatility.

In meeting the design requirements seaplane shapes have followed two distinctive lines of development. The first, traditional line was that of adapting a marine hull to the task of transferring the weight of the aircraft from water to air and back again. The basic disadvantage of the traditional seaplane lay in the bad marriage between a displacement hull and a wing. The second approach, that came in recent years but has not been developed, is that of designing a fair aerodynamic blended-hull shape possessing hydrodynamic and hydrostatic properties. The resulting aircraft bear strong similarities to the 'integrated' landplane shapes for supersonic speeds. The form of the latter seaplane has natural lateral stability and the traditional floats and sponsons are no longer necessary.

10.2 The traditional seaplane

The traditional and blended-hull forms are governed by the same hydrostatic and hydrodynamic principles, the applications alone differ. The principles are therefore considered for the traditional seaplane, and as such they apply to both floatplane and flyingboat.

10.2.1 Buoyancy and static stability

A traditional flyingboat hull is shown in Fig. 10.1, and the most noticeable differences between the hull and an equivalent fuselage are the depth and the shaped ventral surfaces which form a planing-bottom. The buoyancy of the hull is proportional to the volume of water displaced: the weight of water displaced being equal to the weight of the aircraft.

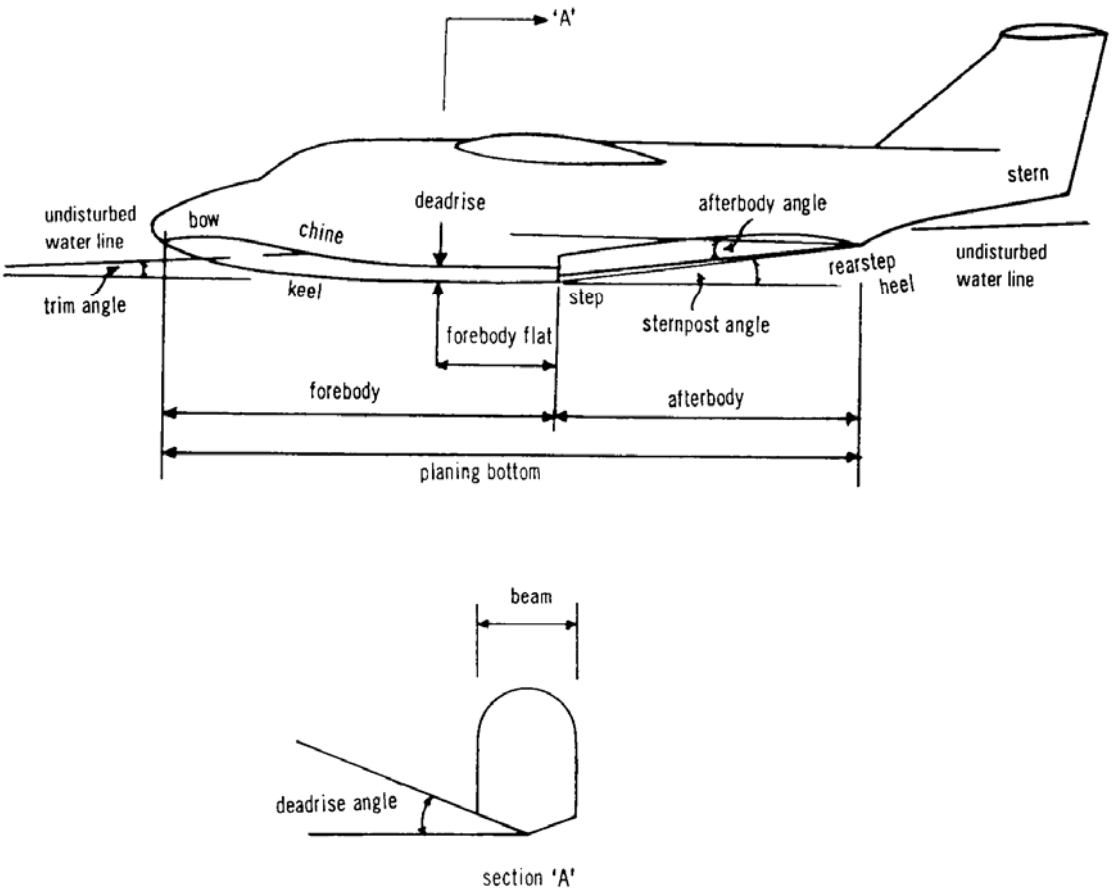

Fig. 10.1 Parts of a seaplane hull.

The forces acting on the hull (or floats) at rest are the weight acting at the **CG** and the buoyancy reacting to it at the centre of buoyancy, or **CB**. The static stability of the system is measurable in terms of the distance between the metacentre, **M**, and the **CG**. The metacentre is the point of intersection of the line of action of the buoyancy in the plane of symmetry (X- Z plane) of the aircraft. The distance between the metacentre and **CG** is called the metacentric height. If the **CG** lies below the metacentre when heeled the metacentric height is positive and the aircraft is statically stable. If they coincide, or if the metacentre lies below the **CG**, then the aircraft is either neutrally stable or unstable, and will turn over with the slightest disturbance. The static stability when heeled is shown in Fig. 10.2, in which all three metacentric heights are positive.

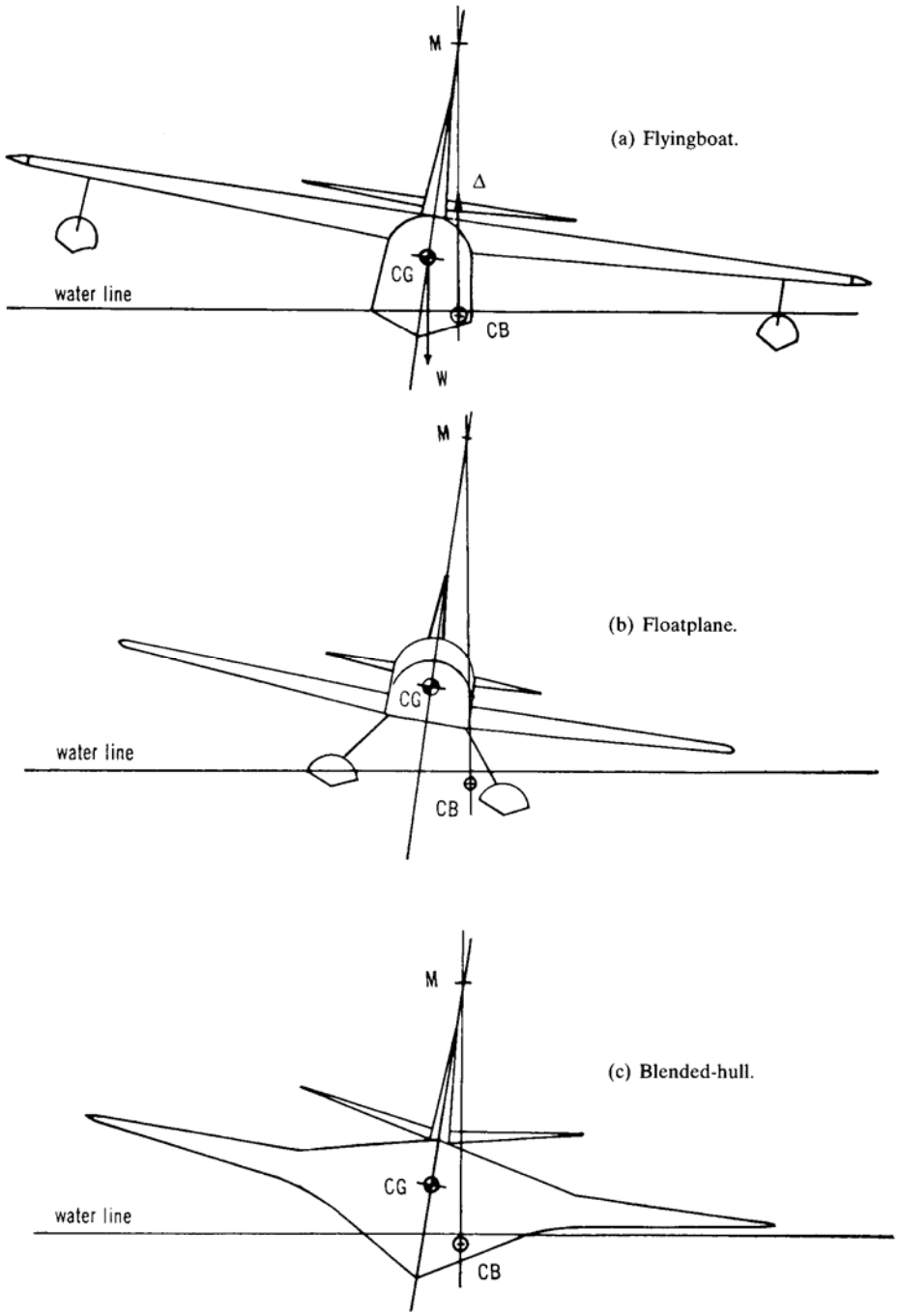

Fig. 10.2 Static stability when heeled showing required relationship between weight, W, and buoyancy, A, which places the metacentre, M, above the centre of gravity.

It should be noted that a conventional hull, such as that shown in Fig. 10.2(a) is unstable by itself. Wing tip floats must be fitted, or sponsons (buoyant stub wings sprouting from the hull sides). However, the latter have high weight and drag and have not been universally favored.

In a similar way the static longitudinal stability is measurable in terms of the metacentric height of the buoyancy vector intersecting the Y—Z plane through the **CG**. The significance of the metacentric height may be reasoned from Fig. 10.2, for the greater the positive distance between **M** and the **CG** for a given angle of heel, the greater is the righting-moment of the weight and buoyancy couple.

(picture)
Plate 10.1 Dornier Seastar amphibian planing. The sponsons provide stability when static, suppress spray when running, and generate lift.

10.2.2 Hydrodynamic lift and drag

A buoyant flat plate immersed in water has static lift when at rest, but generates hydrodynamic lift as well when moved forward at a positive angle of attack. We speak of the displacement regime as being that in which the lift is predominantly hydrostatic, and of the planing regime in which hydrodynamic lift provides most of the support.

Early seaplanes had flat-bottomed floats which were, in effect, buoyant hydroskis. However, as the speed of take-off and landing increased along with wing loadings flat bottoms were changed to 'vee' bottoms, with keels and chines, to reduce impact loads and structure weight.

The drag of the water is made up of frictional, normal pressure and wave-making components. In the planing regime frictional drag is reduced because the hull draught is small. The total resistance, R, is shown in Fig. 10.3, as a ratio of drag/weight, R/W, against unstick-speed ratio, V/V_{us}. Two other curves have been added: the thrust/weight, T/W, and trim-angle. All seaplanes have had marginal performance in the vicinity of the 'hump', where (T/W — R/W) is least.

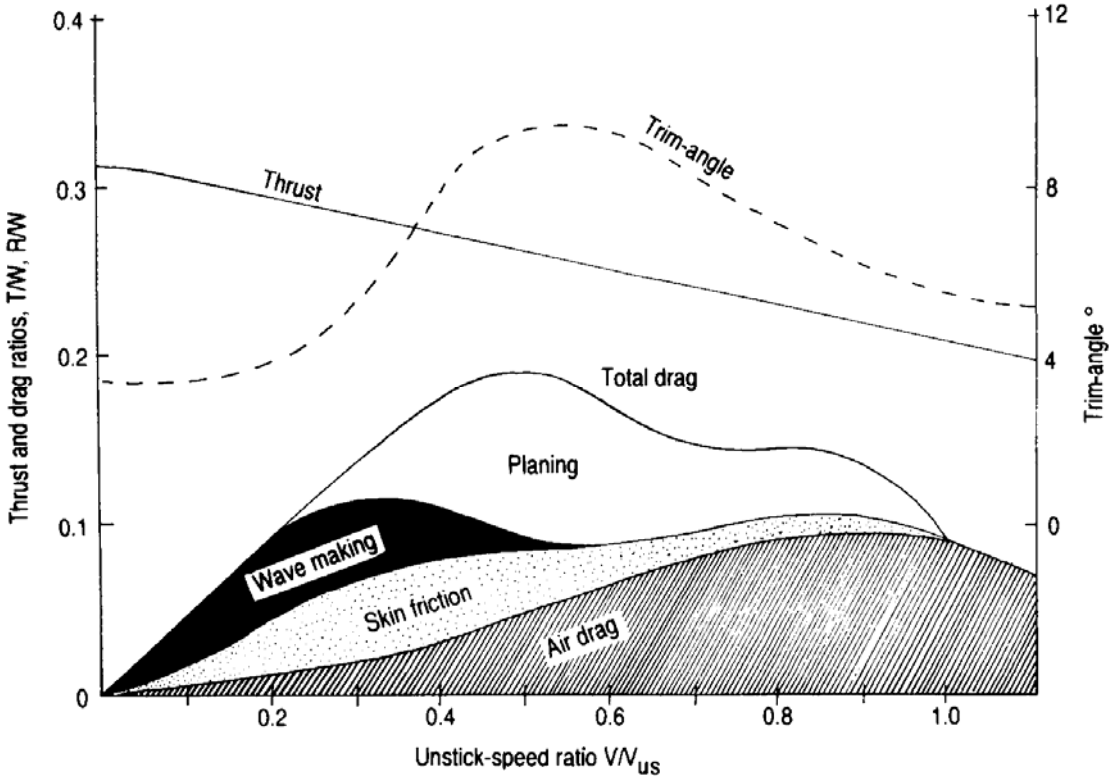

Fig. 10.3 Combined resistance, with thrust and trim-angle during take-off.

The change of attitude, represented by the trim-angle, is caused by the increased normal pressure on the forward-facing hull surfaces and the suction on the rearward-facing surfaces. The conditions are similar to those affecting a convex aerofoil surface in supersonic flight. The normal pressure and suction forces cause a nose-up couple that must be countered by elevator deflection to hold the aircraft at the optimum trim-angle.

The suction acting on the afterbody holds the hull down and causes porpoising. To break down the suction it is necessary to ventilate the afterbody by introducing a layer of air between the skin and the water, and this is done by the introduction of a step about half-way along the planing-bottom. Unfortunately steps cause high drag in flight, and various designs have been tried to reduce it. From the simple step cut across the planing-bottom at right angles to the keel, step shapes have changed to elliptical forms, have been made retractable, and have been replaced by slots ducting blown air from engine compressors. The earliest, simplest steps increased the drag of the basic streamlined body upon which the hull was based by about 48%. An elliptical step has a drag increment around 15%, while the latest seaplane hulls can be built with a total drag increment around 12%, compared with a value of 4—5% for an equivalent landplane. Ideally complete ventilation of the hull on the hovercraft principle, by using a cushion of air, would provide the greatest reduction in drag, but the weight penalty of such a mechanical system would be very high. A more practical alternative is the hydrofoil, a highly loaded planing-surface that lifts the hull clear of the water, which can be retracted in flight for a small weight penalty.

10.2.3 Spray

Spray is caused by the peak pressure developed in the area where the planing-bottom enters the water and occurs in two forms. The first, ribbon or velocity spray, is flung sideways in a flat trajectory from the line of forward contact of the planing-bottom with the surface of the water. Being light it causes few problems, apart from misting of windscreens. The second kind, called blister spray, is heavy and far more damaging. Blister spray is thrown upwards and rearwards by the chine in a heavy cone. The height to which blister spray rises determines the heights of wings, engines and tail-surfaces.

Spray is suppressed by hollowing the forebody from keel to chine, by increasing the forebody fineness (length/beam) and by attaching strips, called spray dams, to the forebody chine. The spray dam must be

tangential to the airflow, and for that reason it cannot be fitted to run far along a conventional chine, which has marked curvature. The dam protrudes at right angles to the spray path and derives its effectiveness from mixing air with the spray as it is deflected downwards towards the water. The aerated mass penetrates the free water surface with high velocity and little or no reflection. Spray patterns and the effect of bottom contour and spray dam are shown in Fig. 10.4.

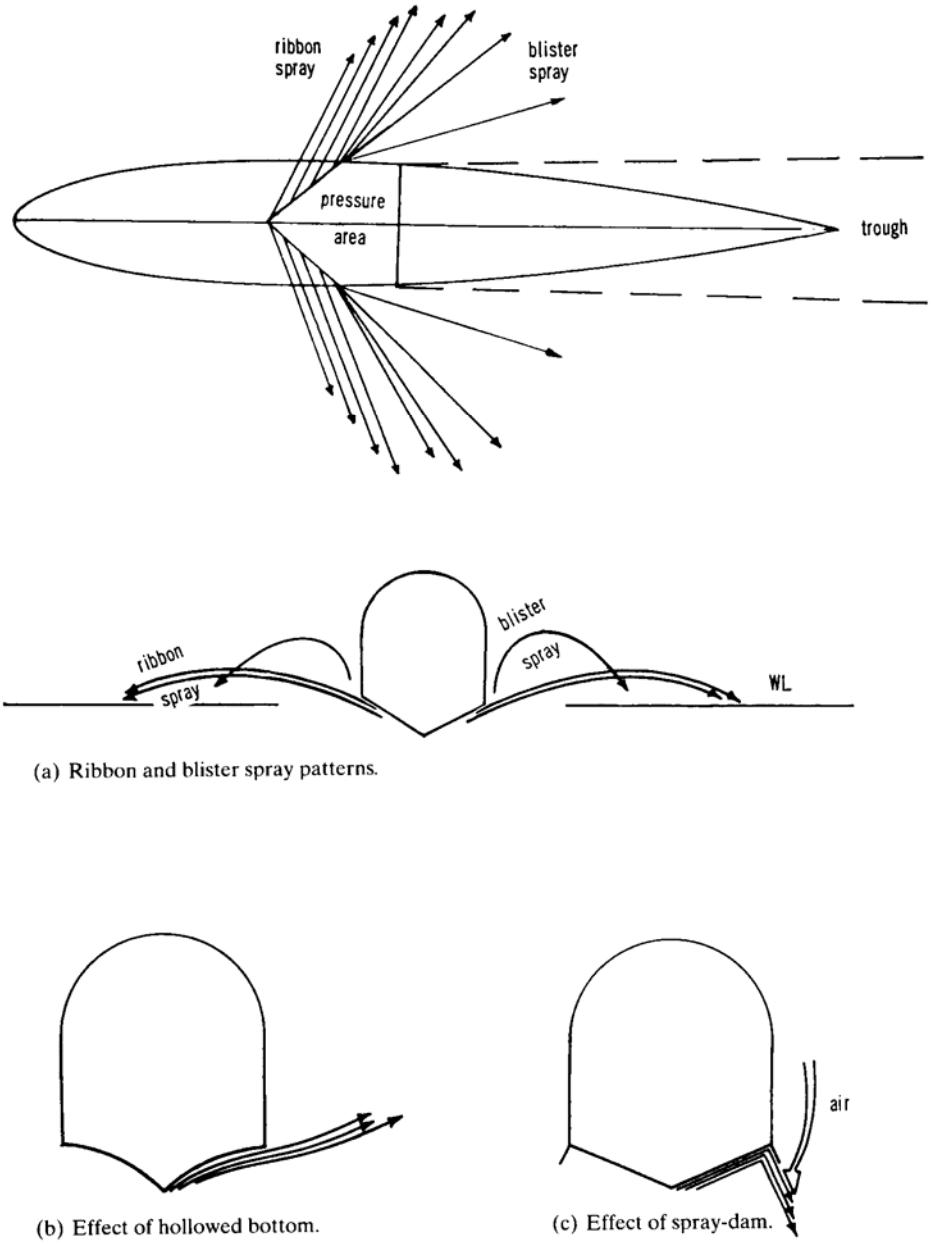

(a) Ribbon and blister spray patterns.

(b) Effect of hollowed bottom.

(c) Effect of spray-dam.

Fig. 10.4 Spray formation and suppression.

10.2.4 Dynamic stability on water

There are three kinds of dynamic longitudinal instability: porpoising, skipping and pattering. Porpoising is the most dangerous and can occur at both small and large angles of trim.

At small trim-angles porpoising is reduced by the use of a flat region of the forebody, called the forebody-flat. The forebody-flat extends 1.5 beam-widths forward of the step and, being flat, sustains more or less constant pressure over the whole surface. Curvature would cause a variation in longitudinal pressure distribution with trim and alter the metacentric height with any disturbance in pitch, so that any motion would be aggravated. Later hulls with refined slender lines, Fig. 10.5, do not have a marked forebody-flat. Instead the deadrise angle is increased forward of the step, which in effect increases the acute vee at the keel. Increasing the deadrise angle forward is called forebody-warp; while decreasing the tendency to porpoising it causes the forebody keel to run deeper in the water and decreases the directional stability.

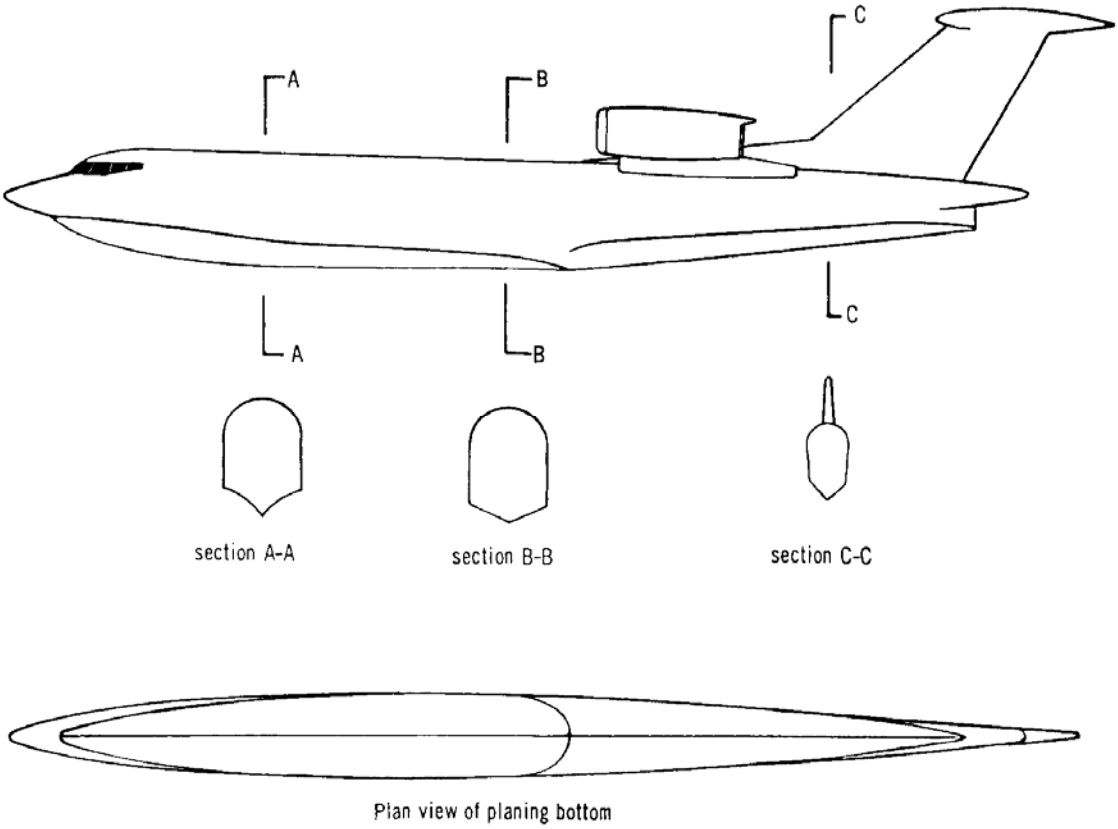

Fig. 10.5 Refined hull form with elliptical step and planing-tail.

Porpoising at large trim-angles is caused by the afterbody dipping into the water. This is prevented by maintaining large afterbody keel and sternpost angles. Porpoising at high speeds results in skipping, the aeroplane being thrown clear of the water before stalling back again. Porpoising is also caused by the step centroid being too far in front of or behind the **CG**. Skipping is caused by the step being too shallow and, therefore, insufficient ventilation of the planing-bottom. Tests indicate that the depth of the step should be 6 - 10% of the beam.

10.2.5 Maneuverability and control

Fine hulls, similar to that shown in Fig. 10.5, have long forebodies and deep-running keels that move the centre-of-lateral-area forward relative to the **CG**, decreasing the directional stability and making the hull prone to ground (water) looping.

The fine hull (with length/beam around 10/1) cannot be used effectively with a small aircraft, because there is not enough beam for stowage of disposable load and equipment. Hull sections must bulge outboard beyond the chines, and the curvature of the hull sides causes yaw if spray strikes one side before the other.

Directional instability may be cured by a skeg, a small fin, protruding into the water from the afterbody keel, but its effectiveness is limited by the range of trim-angles at which it runs in solid water.

Directional control is by water-rudder, or by water-flaps. A rudder usually forms part of the rear-step heel, or the sternpost. Water-flaps (which can be used in the air as air brakes), open differentially under water for turning, or together for braking. They are fitted either side of the afterbody keel and are most necessary for jet aircraft that do not have the beneficial effects of propeller slipstream to help with maneuver and control.

10.3 Future seaplanes — the search for increased performance and versatility

It is always dangerous to forecast the future in aeronautics and there is no intention of forecasting any future for the seaplane here. There were certain lines of development that could be clearly discerned in the late 1940s, that might have led in two definite directions, if seaplane development had not fallen into abeyance outside of Russia.

The first line of development away from the traditional hull and float form was in the direction of using separate hydrofoil and hydroski surfaces to provide hydrodynamic lift. The second line was in the direction of the blended-hull: more or less an integrated shape in which the body possessed buoyancy, natural stability, and the ability to generate both hydrodynamic and aerodynamic lift. Both hydrofoils and hydroskis are being reviewed for surface-effect aircraft.

10.3.1 Hydrofoils

The hydrofoil is, in effect, a small water-wing that remains completely immersed until lift-off, and which is capable of generating lift/drag ratios around 30/1. The attraction of such an arrangement is that relatively small, retractable surfaces can be used to lift the hull in the displacement regime. Some attempts have been made to support aeroplanes completely on hydrofoils, but the operating speeds are so high that the suction over the upper surfaces is too intense and the water 'boils', a phenomenon known as cavitation. Cavitation causes an immediate loss of lift/drag and longitudinal instability.

Experiments indicate that the best arrangement is a main lifting foil slightly aft of the **CG** stabilized by a forward canard foil. Such an arrangement reduces the hump R/W by about one-third, from 0.18 to 0.12. A cantilever 'vee' hydrofoil is shown in Fig. 10.6(a). The hydrofoils would be used to lift the aircraft up to medium speeds then, after cavitation, they would be retracted to leave the aircraft planing on the hull surfaces. The use of spray-dams would allow a shallower hull to be designed.

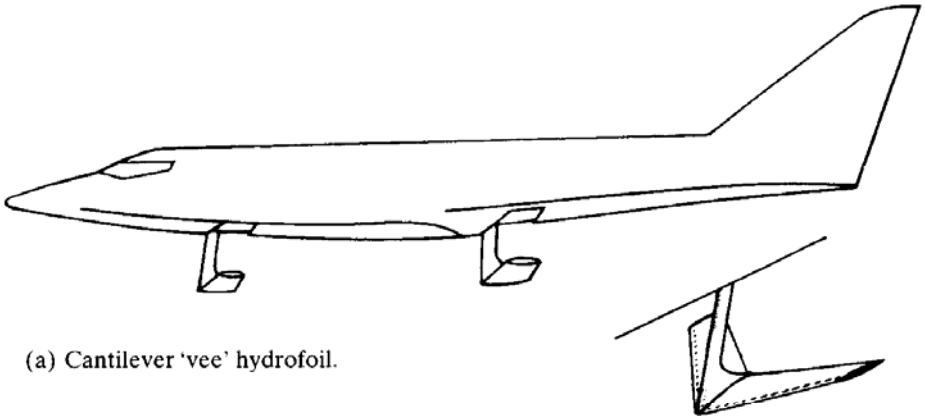

(a) Cantilever 'vee' hydrofoil.

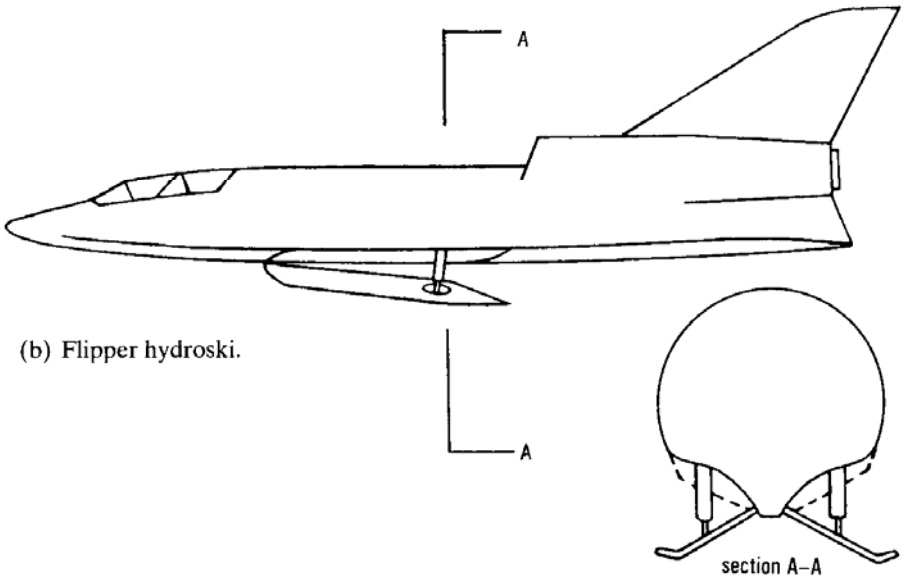

(b) Flipper hydroski.

Fig. 10.6 The generation of hydrodynamic lift using retractable hydrofoil and hydroski arrangements.

10.3.2 Hydroskis

It was said earlier that the hydroski was the predecessor of the planing-bottom. Because the ski has a much smaller area it is not as efficient as the planing-bottom and does not generate such high lift/drag; values of R/W are around 75—80% higher at the hump than those of a conventional bottom. The ski works at much higher trim-angles than a hydrofoil and it does not cavitate, so that it can be used to support the weight of the aeroplane without transferring a load to the hull surfaces.

The greatest advantage of the hydroski is that it can be retracted easily, in fact it may be formed from part of the hull contour, as shown for the flipper-ski in Fig. 10.6(b). In this way a radical redesign of hull form is possible: the step can be dispensed with and the hull made much shallower.

The high thrust/weight of the jet aircraft makes the hydroski an attractive installation, for the higher hump-drag can be accepted without loss of take-off performance. There is a structural advantage too, for skis reduce the normal pounding accelerations imposed on the aircraft by about two-thirds, so that reduced structure weight compensates for the weight of a ski installation.

10.3.3 Blended-hulls

Undoubtedly the most attractive seaplane development of the 1940s, which should not be ignored, lay in the unorthodox approach of attempting to make an aerodynamically refined shape seaworthy. The blended-hull, an American project, consisted of taking an experimental jet bomber, the Convair XB—46 which first flew in 1947, and modifying it for operation from water. The modification involved the addition of a large wing-hull fillet, which faired into the bow and stern, giving the hull an aerofoil section when viewed from the side. The increased volume of the hull, brought about by the fillets, eliminated the need for nacelles allowing the engines to be buried in the thick wing roots. Buoyancy was provided by fillet volume, while spray-control was achieved by the use of spray-dams. The lateral stability of the new full form was such that lateral floats were no longer necessary.

From the modifications to the XB—46 a blended-hull form was drawn that satisfied the requirements for transonic flight and elementary flotation. Figure 10.7 shows a typical set of the blended lines and offsets which formed a starting-point for the particular hydrodynamic research program. They have been reproduced here because they show not only the form of an aircraft with a blended-hull, but also the technique of lofting, which is the way of draughting contours of a body by taking the lines of intersection with the body of a number of mutually perpendicular sections.

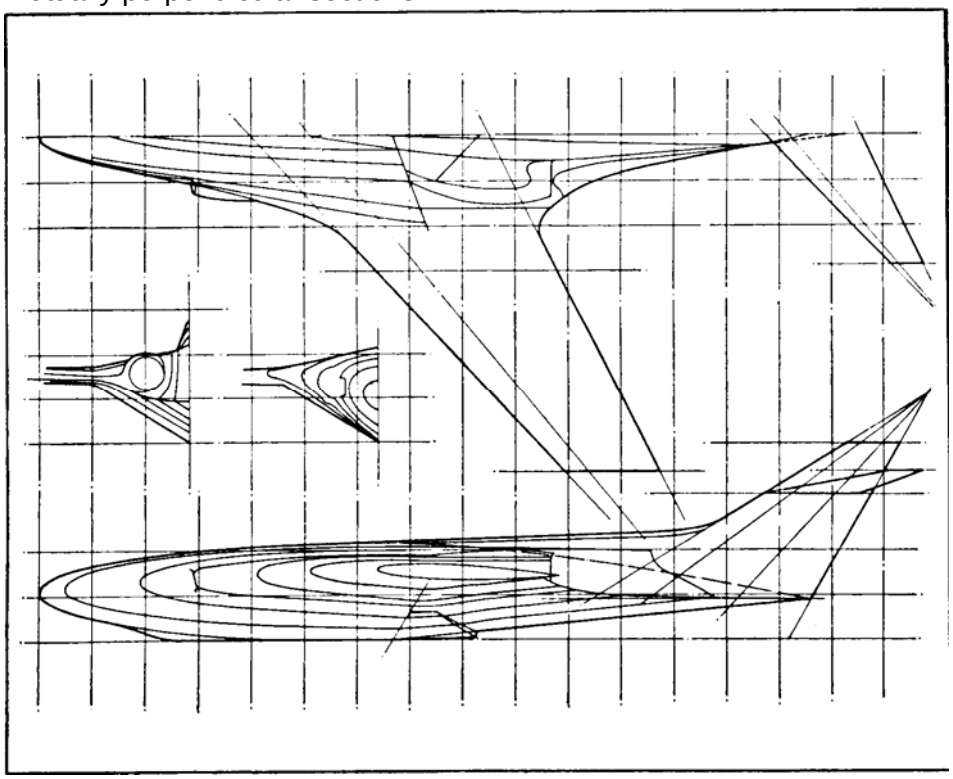

Fig. 10.7 Lines of a transonic blended-hull seaplane used in the Skate Project, USA, about 1950.

The lines of such an aircraft, suitably scaled up, allow for a large payload volume/surface area. When we couple this with the virtual absence of take-off and landing restrictions on water, it would appear that the blended-hull seaplane represents the most natural form of aircraft for lifting really heavy weights in the foreseeable future. Of course, any major redevelopment of the seaplane will involve the building of large, highly specialized bases with docks and hard slipways. The problems involved are, however, probably much smaller than the problems that will have to be faced with the development of airfields for equally heavyweight landplane operations.

Part 5 STRUCTURAL SHAPE

Chapter 11 The Structure

Throughout the book there has been built up a picture of an aeroplane as an essentially aerodynamic shape, an envelope of specially shaped airframe surfaces. Within the envelope lie the masses of payload, fuel, engines and equipment. Outside the envelope lies the supporting air. The reaction of the air to the presence of

the aeroplane can be resolved into component pressures which, when related to specific areas of airframe surface, serve to express the various forces making up the total lift and drag. The airframe is, therefore, a means of distributing a loading upon the surrounding air. However, in making the air do work the airframe must also protect what it contains. Clearly, to do work on the air while serving a protective function the airframe must be strong and stiff, but economically so, in that the weight of structural materials must be no more than is absolutely necessary otherwise the payload and fuel load will be reduced and the economy jeopardized. Much of the art of aircraft design lies in the creation of economical airframe structures. It follows that the structural engineer cannot produce a good structure if he has not been given an accurate distribution of air-loading by the aerodynamicist and, as we have seen, there is a great deal of difficulty involved in predicting accurately the state of the air at every point on an airframe surface all of the time. Much of the early work of the structural engineer is concerned with picking out the most critical design cases — which often run into thousands — arising from the various combinations of speed, attitude and weight throughout the flight.

While seeking economy of structural shape the structural engineer must also include a capacity for potential development. Many aircraft have been known to increase in all-up weight by 50% or more during a useful life. A supersonic transport with a payload of only 4 or 5% could have the payload or range critically reduced by a structure only slightly heavier than it might have been. A unit increase in percentage structure weight can increase the all-up weight by as much as 10%, because of the additional power, fuel load and fuel system requirements needed to carry the additional weight a set distance at a given speed. An increase of 10% in all-up weight can increase the take-off distance by more than 20%, and decrease the ceiling and sea-level rate of climb by 10%. Most airframe structures lie between 20 and 40% of the all-up weight, as shown in Fig. 11.1.

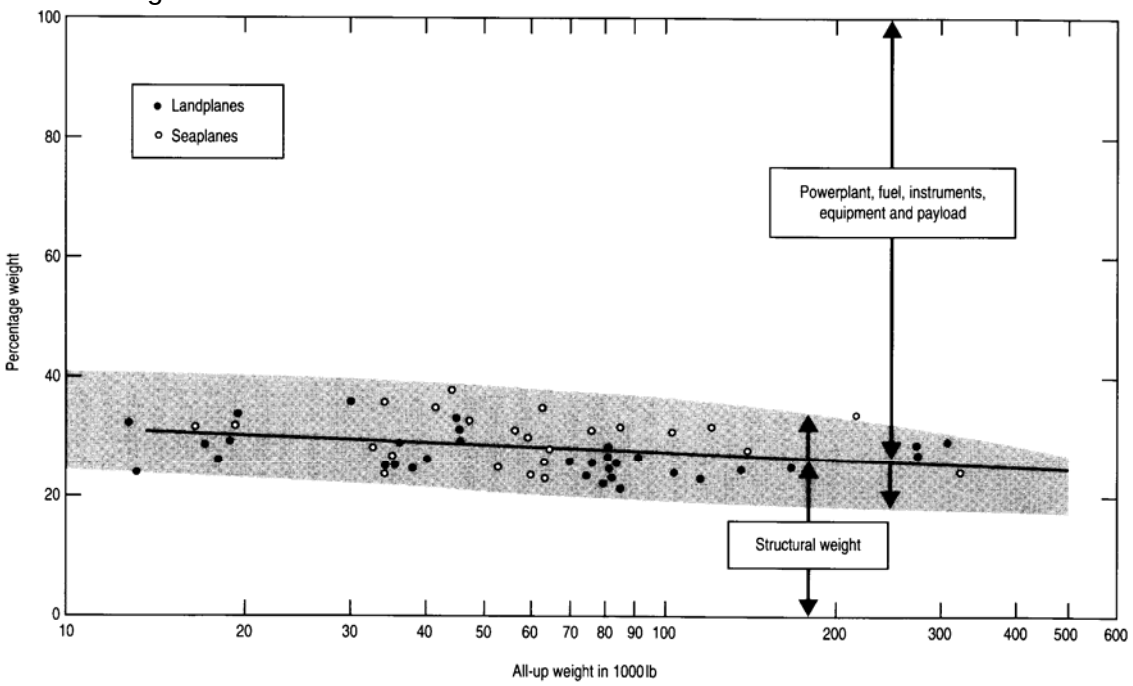

Fig. 11.1 Typical structural weights.

While aiming for structural economy it is also necessary to ensure that skins are reasonably smooth and free from large scale wrinkles in 1 g flight, a marked difference from smoothness on the ground with wings unloaded. Smoothness at higher normal accelerations is unimportant because of the transience of such conditions. Smoothness requirements with limitations on steps and waviness measured in thousandths of an inch are almost impossibly hard to achieve on a large scale, although modern methods of manufacture are now reducing the magnitude of the original problem. Visualize, for example, the technical effort required to maintain a surface contour of one or two thousandths of an inch over a structural length of 100ft and more. Yet the structural engineer must aim for such accuracies because the dividends to be gained in speed and range are so great. Boundary layer control allows some of the limitations to be relaxed, but smoothness of a high order is still essential.

Structural design affects the achievable flight envelope, stability and control, the operational role and the development potential of an aeroplane. To understand how such effects come about we must know something of the principles involved.

11.1 Strength of materials

A wide range of materials is used in the construction of an aeroplane: aluminium alloys, steel, copper wiring, rubber, magnesium, titanium, tungsten and phosphor-bronze, plastics, fabrics, glass, wood, lead. All of the

materials have unique mechanical and chemical properties that must be known and used to the best advantage. Some materials react electrolytically, for example, certain aluminium alloys and steels, and they should not be used in combination. Under some conditions, such as contact with sea-water, the use of certain materials must be considered from the point of view of corrosion. Non-magnetic materials only should be used in the vicinity of magnetic compasses.

The mechanical properties of greatest importance are a high strength/weight, particularly at high temperatures, and high specific stiffness. The strength/weight is sometimes expressed as the specific strength, the ratio of the ultimate strength in tension, or compression, or shear (depending upon what is required), to the density of the material. The specific stiffness is the ratio of Young's modulus of elasticity to the density. The modulus of elasticity is the ratio of the stress to strain within a specified working range of a material. To understand the nature of strength and stiffness we must look at stress and strain and their connection with the elasticity of a material.

11.1.1 Stress, strain and elasticity

Stress

A material is said to be stressed when it is loaded in a particular way. It is useless to say that the material is merely 'loaded', because the effect of the load depends upon the way in which it is applied and upon the area over which it is applied. A knife cuts because the load is applied over a very fine area by the cutting edge; skates melt ice to form a lubricating film of water beneath their sharp edges. In both examples the knife and the skate create high intensities of compressive stress over local areas of the surfaces with which they are in contact.

The equal and opposite action and reaction which takes place between two parts of the same body, transmitting forces, constitutes a stress. The intensity of stress at a surface (usually referred to less exactly as merely stress) is estimated by the force transmitted per unit area, in the case of uniform distribution. When a stress distribution is not uniform the stress intensity at a point on the surface is defined as the local force divided by the element of area, when each is decreased indefinitely.

The three basic stress forms are shown in Fig. 11.2. The first, tensile stress, is caused by pure tension distributed across the cross-sectional element at X—X.

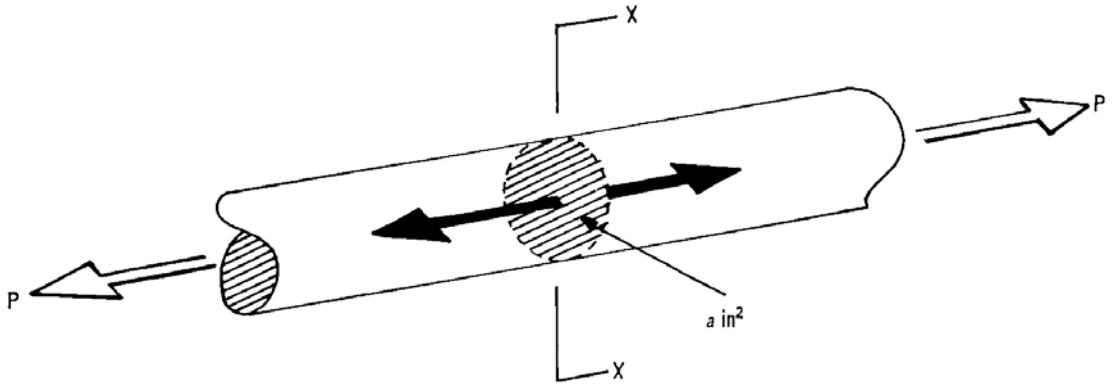

(a) Tensile stress.

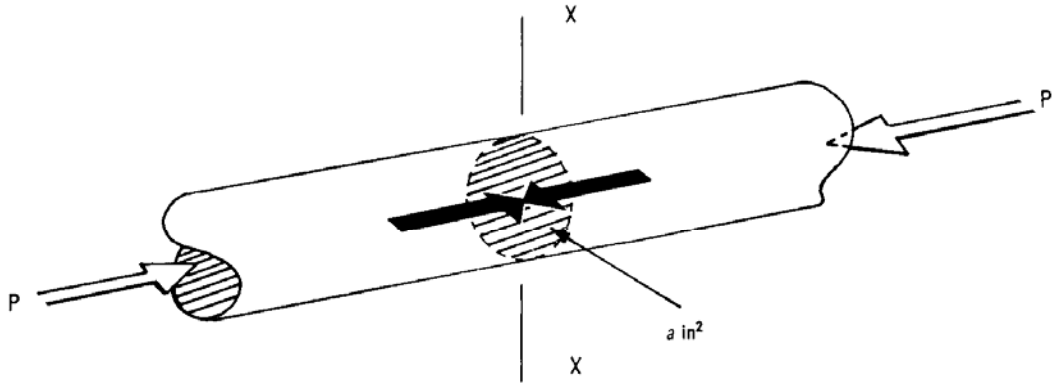

(b) Compressive (bearing) stress.

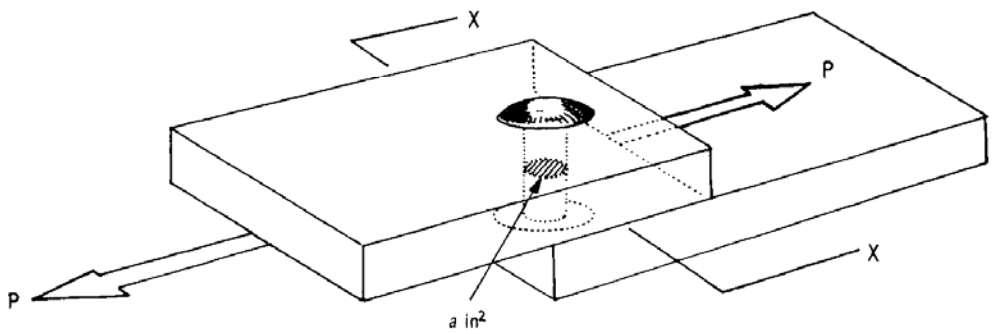

(c) Shear stress.

Fig. 11.2 The three basic stresses.

The tensile force could be in pounds or tons and the intensity of stress expressed in lb/in^2 or ton/in^2. The area of the cross-section is *a* in^2, and the tensile stress

$$p_t = \frac{P}{a} \qquad (11\text{-}1)$$

(picture)
Plate 11-1 Photo-elastic stress patterns in a strip loaded in tension.

The second, compressive or bearing stress, is the reverse of the tensile stress, a, so that if the compressive load is equal and opposite to the tensile load applied over the same area of cross-section, then

$$P_c = -P_t \qquad (11\text{-}2)$$

(for many materials the bearing stress is about 1.5 times the tensile stress required to rupture a material).

The third, shear stress, acts tangentially to the surface of contact as, for example, in the given case of a rivet holding two plates together. The rivet is assumed to have the same area of cross-section as the two specimens of bar, so that the average shear stress is, therefore

$$q = \frac{P}{a} \quad 11\text{-}3)$$

(The shear stress is usually around 2/3rds of the tensile stress required to rupture a material.)

Strain

When a material is stressed a change of shape takes place. The change of shape is multidimensional: for example, a bar compressed as in Fig. 11.2(b) is shortened, but the cross-section expands laterally in all directions if the material is unconstrained. For the purpose of discussion it is enough to consider only the major strain that takes place with stress, and three examples that correspond with Fig. 11.2 are shown in Fig. 11.3.

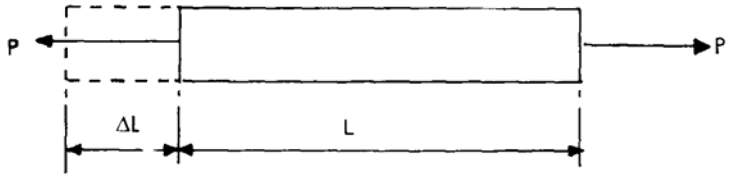

(a) Tensile strain.

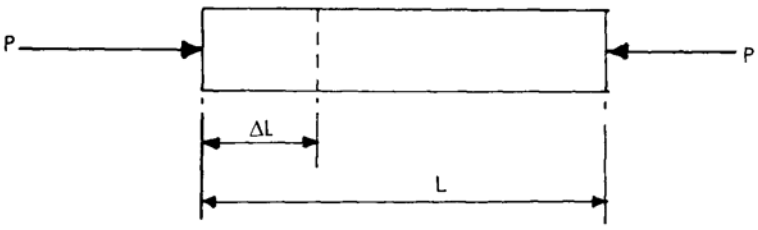

(b) Compressive strain.

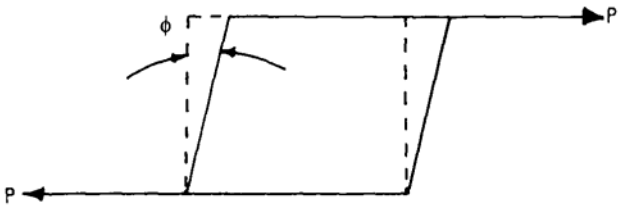

(c) Shear strain.

Fig. 11.3 The three basic strains.

Both tensile and bearing strain are measured as the stretch, or compression, per unit length of the material so that

$$e_t = \frac{\Delta L}{L} \qquad (11\text{-}4)$$

and $$e_c = -e_t \qquad (11\text{-}5)$$

in the examples given, where ΔL is the change in the original length L.

Shear strain, which is sometimes referred to as 'distortional strain' is measured as the angular displacement produced by shear stress. If a piece of material is subjected to a pure stress in a certain plane, the change of inclination (in radians) between the plane and a line originally perpendicular to it is the numerical measure of the resulting shear strain. The example shown in Fig. 11.3(c) would be seen if a longitudinal section through Fig. 11.2(c) could be examined under a microscope. The vertical distance between the shear force action and reaction is the result of inevitable tolerances in the mating of the two plates.

When talking of stress and strain we are not talking of an irreversible action and reaction: stress causes strain, but strain also causes stress. A compressed component exerts a lateral stress upon other components that constrain it. This is caused thermally as well as mechanically. A modern aircraft flying at high speed is immersed in a boundary layer of heated air which raises the temperature of the aircraft skin (Fig. 11.4).

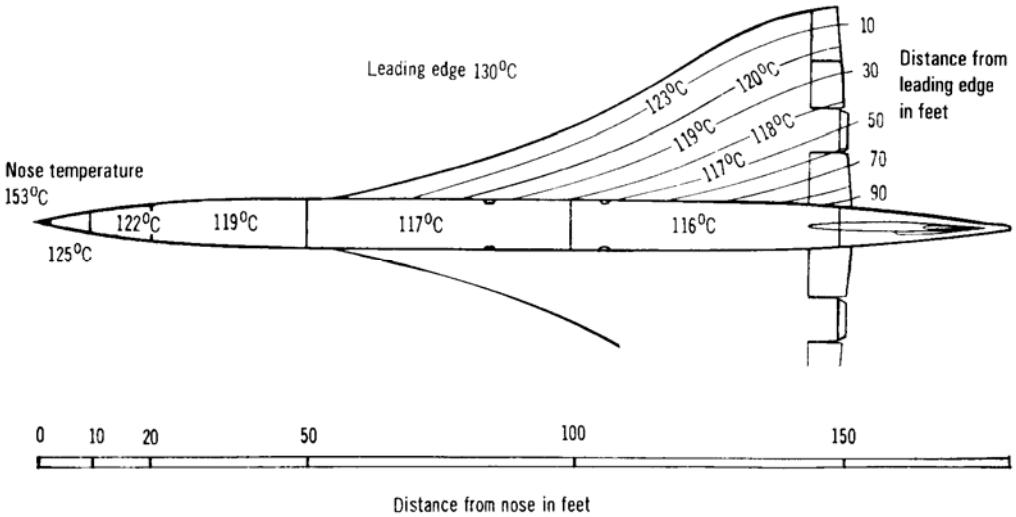

Fig. 11.4 Equilibrium skin temperatures on the upper surfaces of Concorde calculated for M = 2.2 cruise at 60,000ft, ISA.

Inside the aircraft the colder air and fuel maintain a lower temperature in the adjacent structure, so that expansion of the skin relative to the inner structure causes strain, and vice versa.

Aerodynamic heating is not the only source of heat effects. Military aeroplanes may have to operate in the vicinity of detonating atomic weapons, which generate high thermal radiations. A bomb the size of that dropped on Hiroshima generates about seven times the quantity of heat reaching the stratosphere in 1 min from the Sun, at all points about 1 mile from the explosion. The amount of radiant heat absorbed by a structure depends upon the type of material, its reflectivity and the incidence of the rays. Most nuclear strike aircraft have polished, or white surface finishes (on the undersurfaces at least) to counter the effects of such radiation. Many scheduled tests are carried out in the early stages of development of an aircraft when it is necessary to study the combination of aerodynamic forces, inertia, pressurization loading and acoustic effects in a hot environment.

Elasticity

A material is said to be wholly elastic if the strain caused by a stress disappears when the stress is removed. On the other hand, plasticity has occurred if the strain does not disappear: the material is said to have a permanent ‘set’. Under certain conditions a metal can be made to ‘flow’ in much the same way as a liquid by stressing it mechanically. The plasticity of a metal is utilized in the manufacture of aluminium pots and pans, when spinning a metal sheet at high speed causes centrifugal stresses to be set up. Other examples are forging and the drawing of wire.

To explain elasticity and plasticity Fig. 11.5 shows a typical stress—strain relationship for a metal specimen. From the origin 0 to the elastic limit the material will return to its original shape when the stress is removed, and this represents the working range for all practical purposes. Beyond the elastic limit, which marks the limit of proportionality, the material is left with a permanent set. Beyond the hump of the curve the material begins to flow in a plastic state, even though the stress is reduced, until failure occurs at some stress value less than the maximum. A structure is designed so that the working range of any component does not exceed its elastic limit.

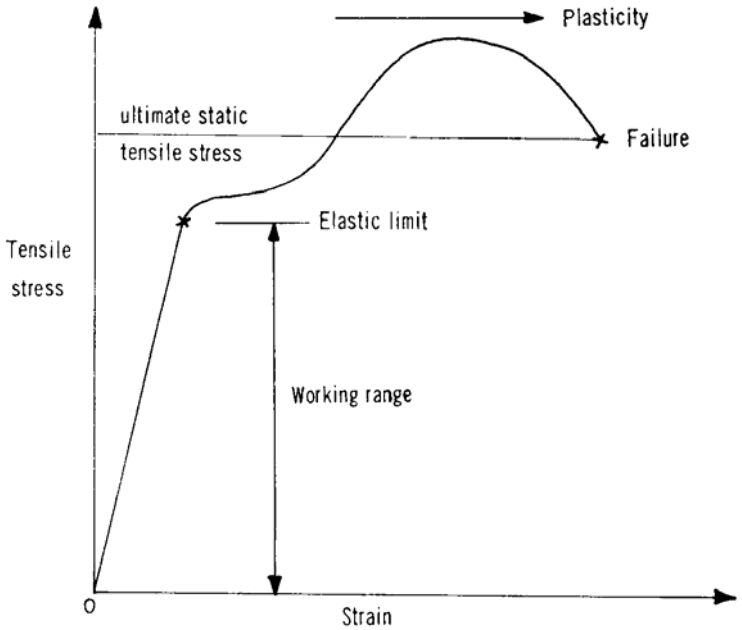

Fig. 11.5 Typical tensile stress—strain relationship for a metal static test specimen. Young's modulus of elasticity, E. equals stress/strain in the working range.

It is now possible to study stress-patterns established in structural components by various applied loads. A good example is shown in Plate 11-1, which shows photo-elastic stress patterns in three test specimens loaded in tension. Models of components are made from transparent plastic materials and, under load, the refractive index is altered by the resulting strain caused by a local stress. The lines are lines of equal stress and, hence, equal refraction.

A useful general law, known as Hooke's Law, states that within the elastic limits of a material the strain produced is proportional to the stress producing it. The law applies to all kinds of stress.

11.1.2 Bending and torsion

The shape of an aeroplane is such that tension, compression and shear are rarely found in isolation. For economy the various members of a structure must be made to take as much simultaneous stress as possible. An important aid in structural analysis is the Principle of Superposition: that the total strain caused by a load-system may be considered as the sum of the individual strains caused by the various load components, taken in isolation.

The system of stresses applied to the structure of an aeroplane comes mainly from bending and torsion (i.e. twisting). The difference between them is that pure bending alone takes place when a load applied at some point on the flexural axis of a member is reacted at another point along the flexural axis (i.e. the locus of points at which an applied load produces bending only). Torsion accompanies the bending when either the applied load or its reaction is offset from the flexural axis. The conception of a flexural axis is useful and reasonably accurate when thinking of unswept wings, but it becomes inaccurate, although still useful, when applied to swept wings. Looking back to Fig. 8.22 we see that pure bending takes place along the flexural axis of the swept wing, but from the point of view of the aerodynamicist torsion is taking place at right angles to the wing root and section A—B.

Imagine a beam fixed at one end and supporting a weight at the other. Between the upper and lower surfaces it is possible to define an imaginary neutral axis which, when the end of the beam is bent downwards relative to the root, forms the boundary between the upper fibers that are stretched in tension and those below that are shortened by compression. In a similar way a neutral axis can be drawn in the skin of a pressurized cabin for, as the pressure causes the skin to bulge outwards, no matter how slightly, the outer surface is placed in tension and the inner in compression. Returning to the beam, if the applied load is W, then the load exerts a bending moment at any section X—X distance x from the point of application. The moment is given by

$$M_X = W x \qquad (11\text{-}6)$$

If the beam is such that the load W is acting at a distance L from the root, then there must be an equal and opposite fixing moment at the root:

$$-M = -(W L) \qquad (11\text{-}6a)$$

The bending and fixing moments are not the total values in the example, they only represent the incremental increases due to the addition of some load W. The weight of the beam must also be taken into account, as well as any other distributed or point loadings, and it is in this way that the principle of superposition comes to our aid.

If, in the example given, the load W was offset some distance *y* from the flexural axis, then the load would also apply a torque along the length of the beam equivalent to

$$T = W y$$

It follows that to fix the beam under these conditions the root must exert an equal and opposite torque, T.

These ideas can be applied to the airframe, where they can be visualized in the case of a swept aerofoil surface (Figs 11.6 and 11.7).

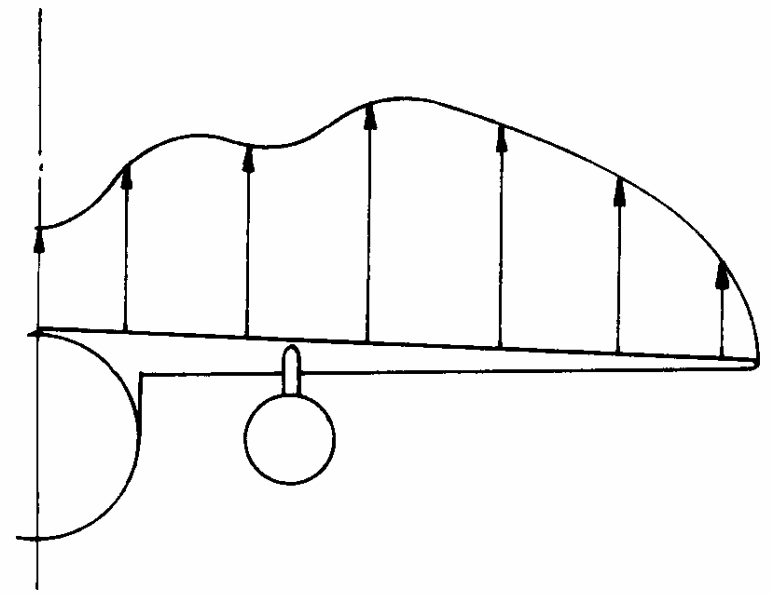

Fig. 11.6 Lift distribution giving rise to W/2 on half-wing.

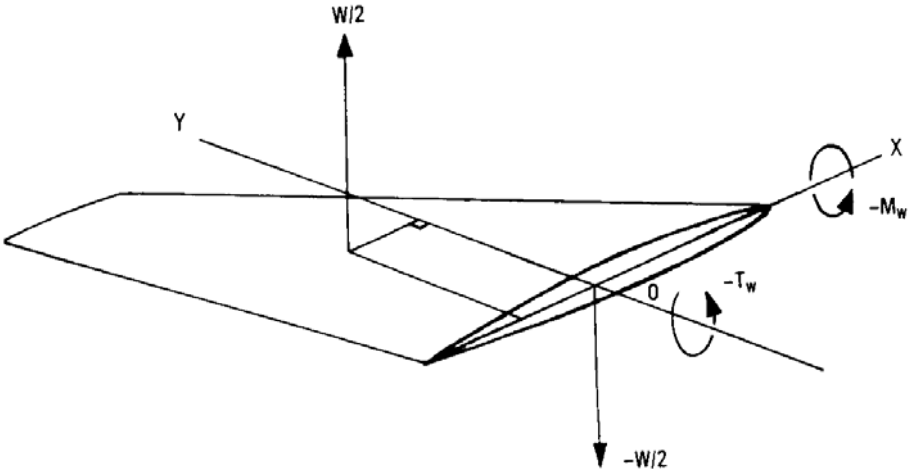

Fig. 11.7 Bending moment, shear and torque reactions, $-M_W$, -W/2 and $-T_W$, at root of half-wing due to lift, W/2.

The lift of the surface, for example a wing, is equal to half the weight of the aeroplane, which acts at the aerodynamic centre for the purposes of calculation (but which really acts at a point downwind of the aerodynamic centre, called the centre of pressure — the difference is irrelevant here). The torque of +W/2 about the O—Y axis is reacted at the root by the torque $-T_W$. The bending is reacted at the root by a fixing moment $-M_W$. To complete the picture a shear reaction -W/2 must be added at the wing root.

(picture)
Plate 11-2 The mechanism and appearance of a fatigue failure.

The pictures in Figs 11.6 and 11.7 are essentially simplified and in practice there are complications which affect the reduction of reacting forces and moments. For example, the figures lack the drag resultant which introduces a further reacting moment and shear force, preventing the wing from sliding and folding rearwards. The pitching moment about the aerodynamic centre must also be added, which increases the required torque reaction at the root to prevent the wing being twisted off the fuselage in a nose-down sense. Further pitching moments, bending moments, torques and shears are introduced by wing-mounted stores (external fuel-tanks and bombs), engines, flaps and undercarriage units.

11.2 Stress—strain reversal and fatigue

In flight the aerodynamic loading on the airframe is constantly changing and the inertia loading with it. Variations are caused atmospherically and by the pilot through his flying controls, while further variations are caused by pressurization and depressurization of the cabins, acoustically by jet effluxes and when taxying on the ground. Fatigue failure, i.e. cracking of members under repeated stresses much lower than the ultimate static tensile stress, is exhibited by most metals and their alloys, by some plastics, woods and other materials that possess some ductility.

It is only recently that a study of the mechanism of fatigue has become possible, with such instruments as the electron microscope. The fatigue characteristics of a material are related to its atomic structure: the atomic lattice. It is impossible to make homogenous materials with perfect lattices and dislocations appear, in effect irregularities in the pattern of the atoms, that allow certain lines of atoms to move unevenly under the influence of shear stresses. The lines of atoms move in planes, one plane slipping over another. A dislocation causes some planes to slip individually. Eventually a minute portion of material is extruded, squeezed out, along a slip-plane. It is thought that the extrusion leaves behind it the embryo crack. When the crack appears the cross-sectional area of the remaining material is reduced and the stress intensity rises. A fatigue crack is shown in Plate 11-2(a) with crack growth due to fatigue appearing as light marks, and that due to tension as dark. Typical fatigue curves for steel and aluminium alloy are shown in Fig. 11.8. Apparently modern 'high-duty' alloys do not exhibit such a marked resistance to fatigue failure as the older, softer, aluminium alloys, although they have much higher ultimate strengths.

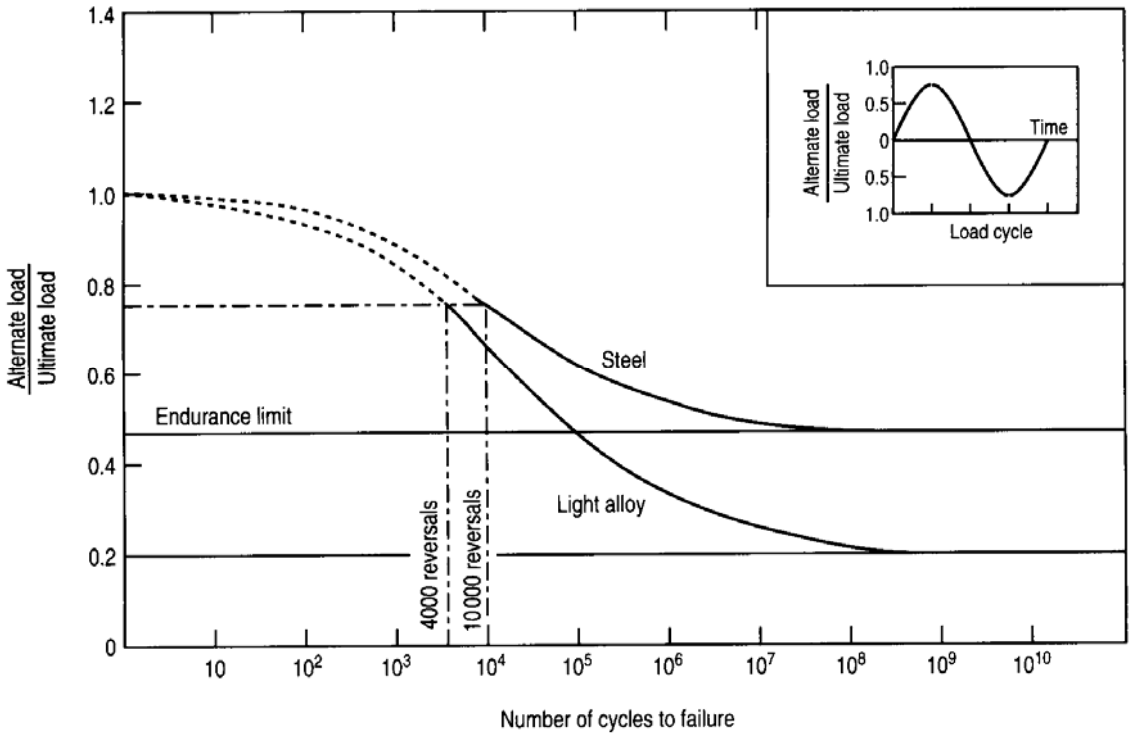

Fig. 11.8 Typical S—N fatigue curves for steel and aluminium alloy. Modern 'high-duty' aluminium alloys do not exhibit such a marked resistance to fatigue failure as the older, softer, aluminium alloys, although they have much higher ultimate strengths.

11.3 Structural principles

A structure is a system of individual members arranged in frames (Fig. 11.9).

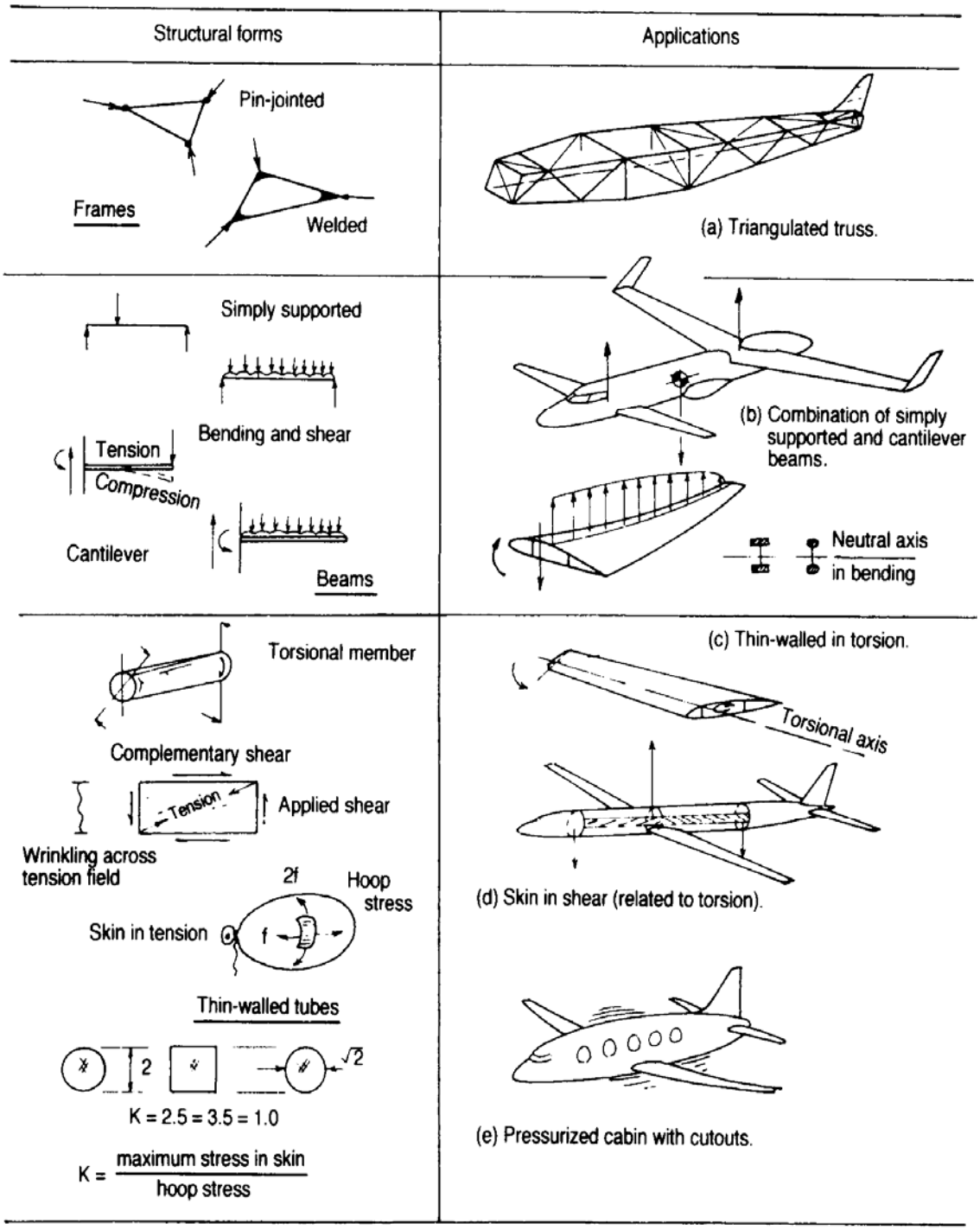

Fig. 11.9 Structural forms.

The simplest kinds of structures are readily recognizable as frames, but more advanced structures lose any obvious indication of framework as members are made to do more than one job. For example, a fuselage must be composed of a structure supporting a load-bearing floor and an external skin, fairing and protecting the internal load. Early aeroplanes had an internal load-bearing structure separate from the skin (in effect a fabric envelope stretched to shape over a light fairing structure). Later machines feature load-bearing skins, in which the envelope served the dual purpose of supporting the internal payload as well as resisting air-loads. The latter kind of structure, known as monocoque, was no less a structure than the first. One may draw analogies between the human anatomy, with a soft external skin fairing and protecting a load-bearing skeleton, and the anatomy of a lobster or a crab, with a hard load-bearing skin on the outside. Both are different, yet both display structural arrangements that obey the same principles.

Almost classical examples of both kinds of structure were the Hawker Hurricane and Supermarine Spitfire which formed the bulk of the RAF fighter force in the Battle of Britain. The Hurricane, with its tough internal tubular structure and soft skin of fabric and metal was easily repairable at station level, and its serviceability was remarkably high, at 63%. The Spitfire, on the other hand, had a load-bearing skin which suffered badly and repairs had to be made at maintenance units and factories. Although the Spitfire was superior in performance it had a lower serviceability of 37%. No doubt the better serviceability rate of the Hurricane, together with its superior numbers, enabled it to shoot down 3 aircraft to every 2 of the Spitfire,

even though the Spitfire was the better gun-platform. However, no philosophy of structural design should be based upon an observation on the state-of-the-art at that time.

11.3.1 Simple frames

A simple frame is a structure consisting of a number of bar-like members fastened together, ideally, by hinged joints. The hinged joints ensure that loads carried by the members are pure tension and compression, unadulterated by bending and torsional effects. A perfect frame has just enough members to keep it stable in equilibrium under any system of forces acting at its joints. If it has too few members it is called deficient, if too many, redundant. Paradoxically, aero-structures feature a great number of redundancies in the never-ending search for economy: this introduces difficulties in the way of calculating stresses.

In Fig. 11.10 are shown a number of simple frames with pin-joints. A space-frame, shown in Fig. 11.10(c) is a development of the two-dimensional plane-frame into three dimensions. Resolution of forces is the same in both examples, by the use of force diagrams, the treatment of which can be found in any good book on statics.

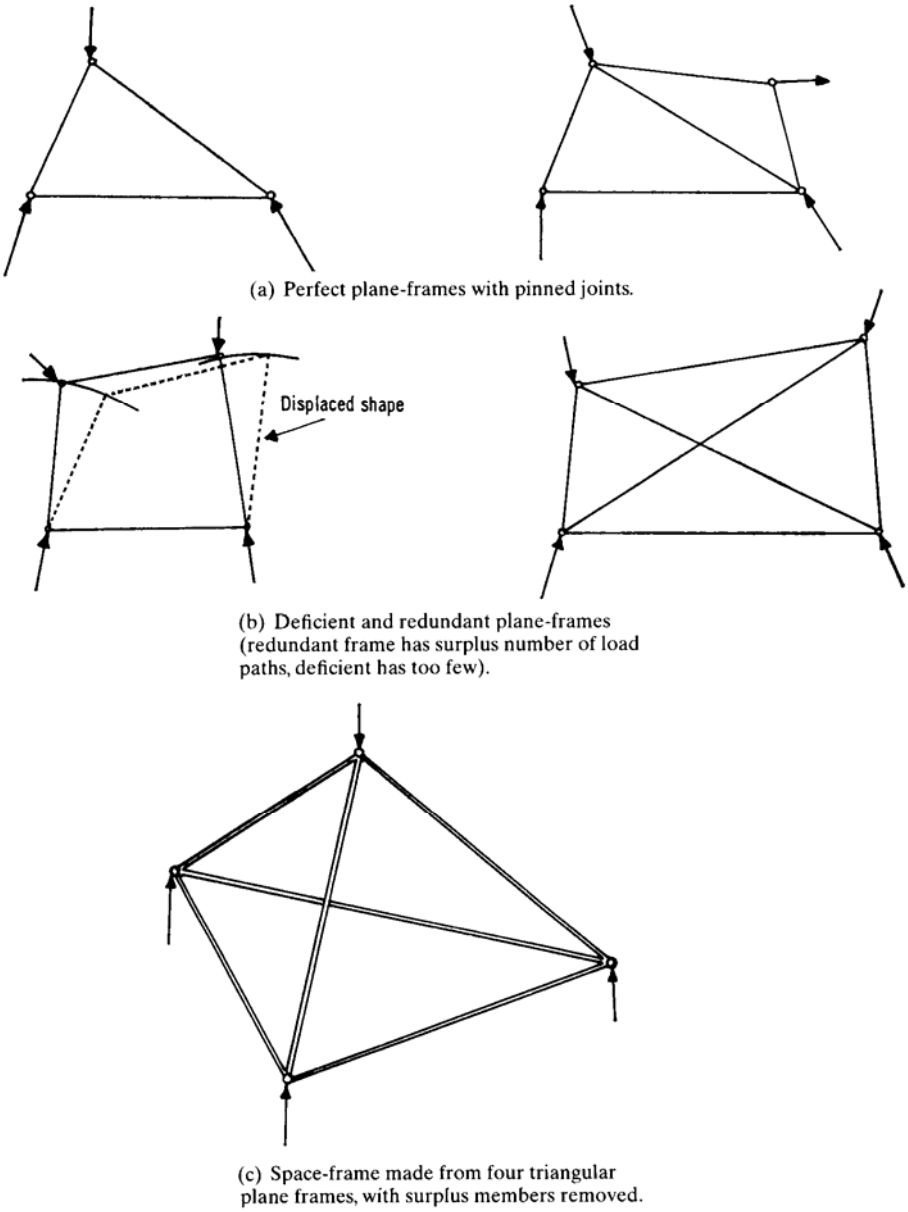

(a) Perfect plane-frames with pinned joints.

(b) Deficient and redundant plane-frames (redundant frame has surplus number of load paths, deficient has too few).

(c) Space-frame made from four triangular plane frames, with surplus members removed.

Fig. 11.10 Simple pin-jointed frames.

11.3.2 Complex frames with fixing moments

Imagine a simple frame to have its joints welded instead. If the frame was initially deficient, as shown in Fig. 11.10(b), then it would be improved by welding and would become, for many purposes, a good approximation to a perfect frame. Furthermore, it could possibly be lighter than the pinned version, because of the omission of the diagonal member.

In the pinned case the forces in the members can be resolved as pure end-loads, with no bending. In the welded frame, compared with the pinned in Fig. 11.11, bending is transmitted to the members by means of

the frame distorting while the angles at the corners remain unchanged. Instead of pure end loads each member is subjected to a system of forces such as that shown in Fig. 11.11(d).

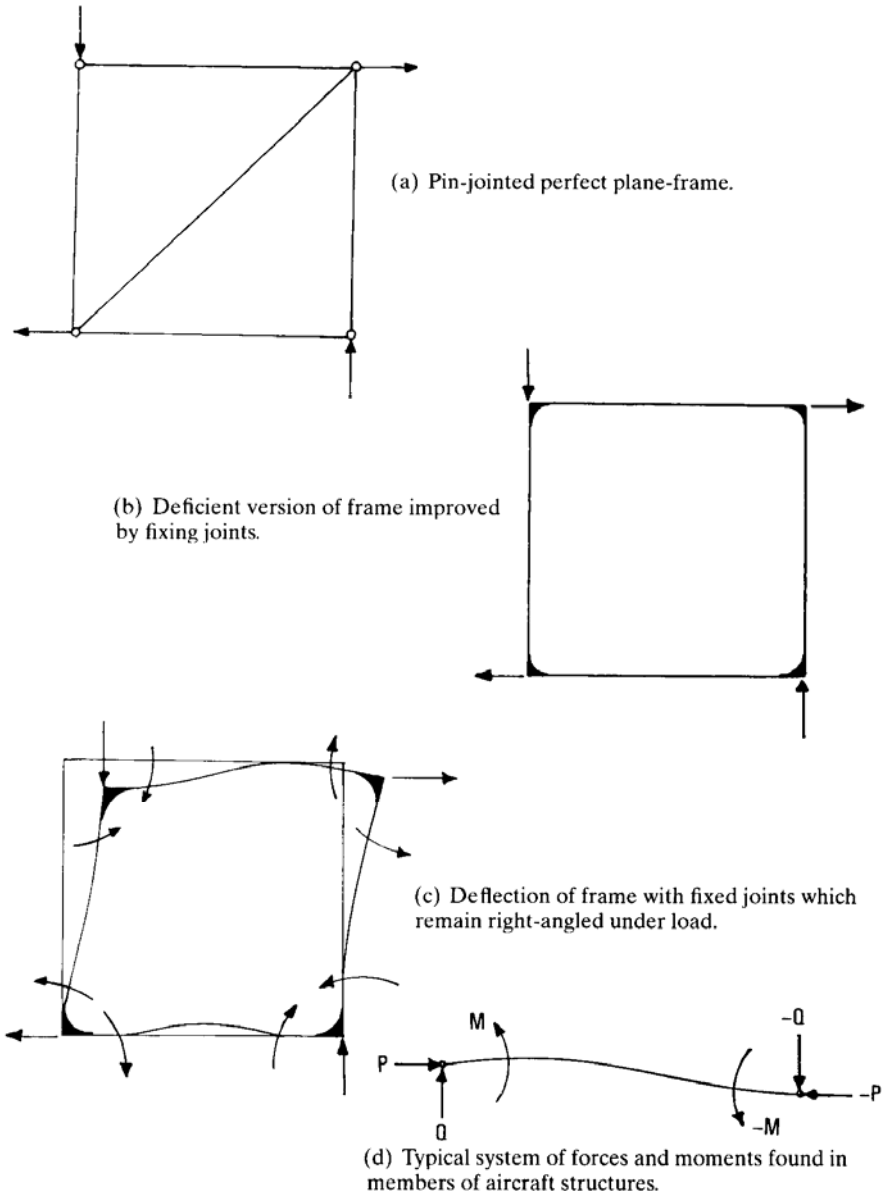

Fig. 11.11 Plane-frame with fixing moments at joints.

This kind of arrangement of forces and moments happens constantly in aircraft work as structural members, which have torsional and bending strength, must be arranged to take torsion and bending, and thus pay a little more fully for the carriage of their bulk. Such arrangements of members to satisfy a vast number of different stressing cases give rise to the apparent paradox of redundancy in aircraft structures. Some examples of complex frames with fixing moments are shown in Fig. 11.12. To analyze them rather elegant strain-energy methods must be employed in place of the simpler force diagram.

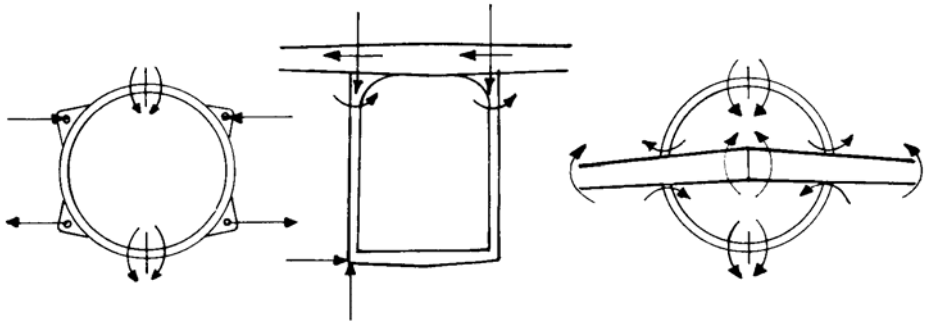

Fig. 11.1.2 Three examples of redundant frames with applied loads and moments from wing and undercarriage.

Strain energy

If a force applied to a body causes the point of application to be displaced, then work is done in causing the

displacement. The magnitude of the work is given by the product of the force and the distance through which it moves. In a similar way, when a force or a stress is applied to a body, strain occurs and the force is said to do work. In each of the frames shown so far each force causes a component strain in each member. Equations can be stated for each structure which, when resolved, describe the distribution of strain energy (work causing strain) between the members caused by the individual forces. Solution of the equations depends upon the principle that a load ‘chooses’ the path of least work, for structures too obey the law of conservation of energy.

11.4 Structural design

Historically the main parts of an aircraft structure are the fuselage, wings and tail. Most bodies are built in the same way as a fuselage, most aerofoil surfaces in the same way as wings. The sketch in Fig. 11.13 suggests the salient features of an aircraft structure.

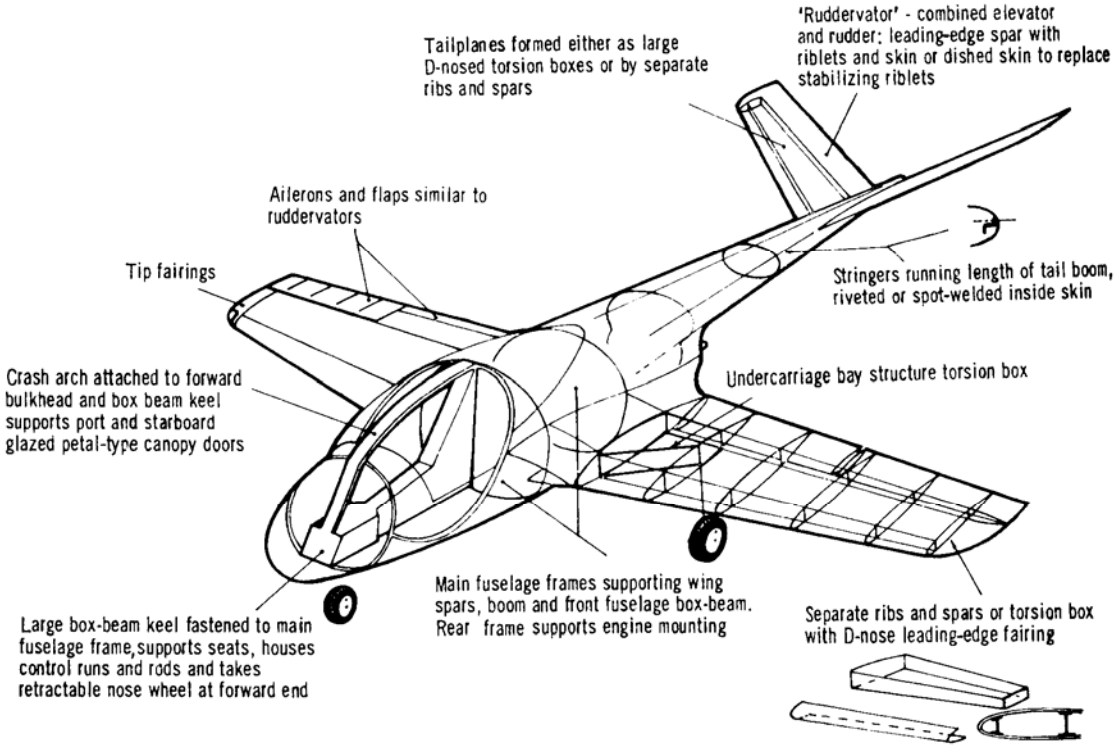

Fig. 11.13 Sketch of main details of aeroplane structure.

Taking the fuselage first, the skin is usually formed of metal sheets riveted, or spot-welded, to metal frames, formers and bulkheads. Generally speaking a frame has the outline of a cross-section of a body and is built up from a number of smaller members. A former has the same outline, but is much lighter and is usually pressed from sheet metal. The centre is cut away, so that a former is really a stiffening outline for maintaining the form of the skin. In section it may be of ‘Z’ (⊓⊔) or ‘top-hat’ (⊔⊓⊔) section: the latter being in effect two ‘Z’ sections facing each other and joined together along the upper edge. A bulkhead is a complete section cutting like a diaphragm across a body. As such it may be built up like a frame, or pressed from sheet. A bulkhead may be pierced by holes and doorways, but these are usually covered by plates and doors that form part of the load-bearing bulkhead structure.

Running lengthwise along the fuselage, supported by the bulkheads, frames and formers and, in turn, supporting the skin are the stringers. Stringers are light members that may be of ‘Z’ or ‘top-hat’ section. Related to the stringers in that they run fore and aft, but serving a major structural purpose in that they are designed to take end-loads, are the longerons. If the fuselage is viewed in elevation it is seen to be a long beam, supported by the wings somewhere between 40 and 50% of the length from the nose. There are local loads applied to the beam from tail and nosewheel, and perhaps from engine-mountings, with local distributions of loading from payload and equipment. Tension and compression in the structure above and below the neutral axis of the fuselage must be met by end-loads in the longerons aided by the skin. In a similar way side-loads on the fuselage are met by longerons and skin. If the skin is thick enough there may be no longerons as such, the end-loads being met by an arrangement of stringers, slightly heavier in section than usual.

Across large cutouts a structure may contain internal bracing members made up of struts and ties. Depending upon the load directions in Fig. 11.10 the individual members may be either struts or ties: struts being members end-loaded in compression, ties being loaded in tension. Struts and ties are rarely intended to take torsion and bending.

Aerofoil surfaces consist of spanwise beams, called spars, and chordwise formers called ribs. The

shape of the skin may also be maintained by spanwise stringers that serve a major purpose in effecting a reduction in spar sections and weights, by distributing end-loads into the skin. Ribs may be built up like frames, be light as formers, or be made like bulkheads. The latter are found in wing structures used to contain fuel, without recourse to internal, separate, fuel tanks. Spars, ribs and skin form the tank surfaces.

The remaining shape of an aeroplane is largely non-structural, in that it consists of fairings, cowlings and fillets. These items are made of shaped skin, stabilized by stringers and formers.

11.4.1 Thin-walled tubes, cutouts and panels

The modern aeroplane can be looked upon more conveniently as a system of thin-walled tubes designed to take torsion and bending. In a way we must change our present point of view to look from the outside in, by way of the thin-walled tube, instead of from the inside outwards (as we have just done) from structure to skin. A thin-walled tube is an interesting phenomenon because it amounts to a piece of thin sheet, wrapped around into a tubular shape that may be cylindrical, conical or ogival. It is called thin-walled because of the relatively small ratio of wall thickness to tube diameter.

The modern metal aeroplane may be approximated to a family of thin-walled tubes for the purposes of some stress analyses. The fuselage is, in effect, two tapering tubes joined at their bases to a cylinder. The wings and tail surfaces are approximately flattened tubes, tapering from roots to tips. Ribs, spars, frames, longerons and stringers are methods of internal stiffening. In many respects the tubes are also torsion boxes, which are developments of the pure thin-walled tube, in that the strength of such members is vested in the ability of the skin to resist shear forces. The skin takes a moderate range of end-loading, but its great virtue lies in the way it is made to work in shear.

In Fig. 11.14 an aeroplane is shown as a family of thin-walled tubes. The weights of the fuselage ahead of and behind the wings are reacted at the centre-section shown, for simplicity, as a single frame, part of which is an arc CD. Clearly, the fuselage is in bending and shear, as shown in Fig. 11.14(b), where the split arrows show that the side AB of one panel, ABCD, is being displaced downwards relative to CD. Similarly, the side EF of the rear fuselage panel is being displaced downwards relative to side CD. If the fuselage is in torsion due, for example, to fin side-load or to a side-load from the nosewheel undercarriage, then torsion is transmitted as shear around each section. Depending upon the direction of normal bending loads (such as those shown), the shear caused by a system of bending loads is increased on one side of the fuselage, and decreased on the other by the additional torsion.

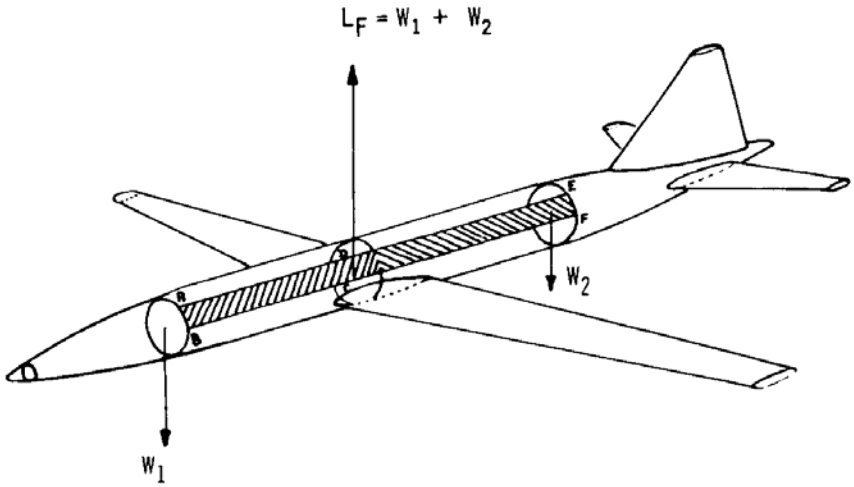

(a) The aeroplane as a family of thin-walled tubes, showing typical normal bending-shear loading from front and rear fuselage transmitted to centre-section where it is met by lift component L_F.

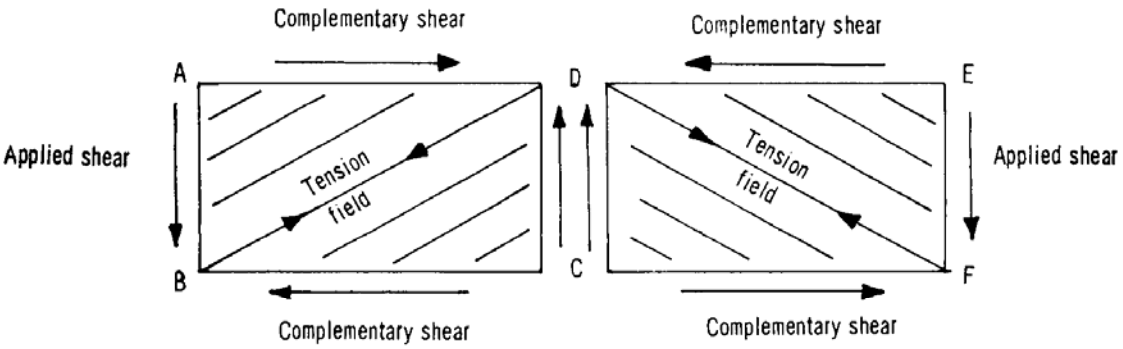

(b) Applied shear on side panels ABCD and CDEF, showing complementary shears and panel reactions as tension fields to applied and complementary shears.

(c) Compression across tension fields appearing as skin wrinkling (example shows appearance of diagonal AC).

Fig. 11.14 The aeroplane as a family of thin-walled tubes. In addition to shear in the fuselage sidewalls, the top skin is in tension and the bottom in compression.

Now, panels ABCD and CDEF are in equilibrium in that they cannot change their positions relative to the aircraft datum. To be in equilibrium the torque of the shear along AB and CD (which tends to rotate the first panel in an anti-clockwise direction) must be opposed by an equal and opposite torque due to opposing shear along sides AD and BC as shown. The same argument applied to panel CDEF enables us to postulate the existence of counter-shear along sides DE and CF. Here then is the interesting property of the thin-walled tube/torsion-box: loads normal to the length are reacted by complementary shear stresses along the length.

Each panel, ABCD, CDEF, is formed by a boundary frame consisting of portions of fuselage frames or formers and longitudinal stringers, and skin. Ignoring the skin for a moment we see that each panel boundary is tending to distort in a similar way to the deficient frames in Fig. 11.10(b) and Fig. 11.11(c). The skin reacts against the distortion by providing tensile strength parallel with diagonals BD and DF. The tension fields are accompanied by compression parallel with diagonals AC and CE. The existence of tension fields and wrinkling, as shown in Fig. 11.14(b) and (c), can often be seen in flight. Looking along the upper surface of the wing of an airliner which, for economy, has a light, thin skin one can often see diagonal wrinkling during turns. The wrinkles are caused by compression in the upper skin, aerodynamic pitching moments and by torques from the engine-mountings.

The fuselage shown in Fig. 11.14 is in bending as a beam, so that the structure above the neutral axis

(lying along the fuselage length) is in tension, while that below is in compression. The total loading applied to the structure is, therefore, a combination of tension, compression and shear. Stressing cases are examined to see what combinations of maneuvers and atmospheric accelerations result in the highest resultant sums of tension, compression and shear. Of course, wings and tail surfaces behave, and are treated, in a similar way to the fuselage. The only difference is that some of the applied loads have different origins, but all come together to be met by the structure as a complete whole.

Cutouts

Cutouts, i.e. windows, doors, servicing panels, hatches, bomb-bays, etc., cause a recurring headache for the structural engineer. As soon as one makes a hole in a load-bearing skin a stronger surrounding structure must be introduced to provide adequate paths for the detour of the stresses. Perhaps the most noticeable feature of cutouts is the rounding of the corners: sharp corners cause excessively high stress concentrations.
Figure 11.15 shows the cylindrical form of an ideal pressure cabin.

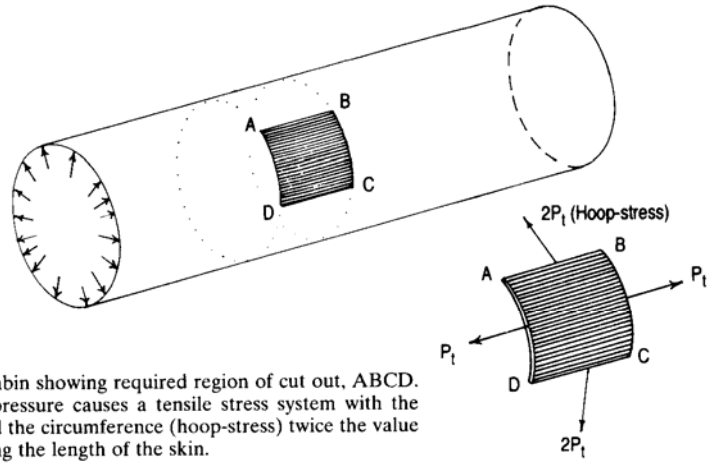

(a) Pressure cabin showing required region of cut out, ABCD. The internal pressure causes a tensile stress system with the tension around the circumference (hoop-stress) twice the value of tension along the length of the skin.

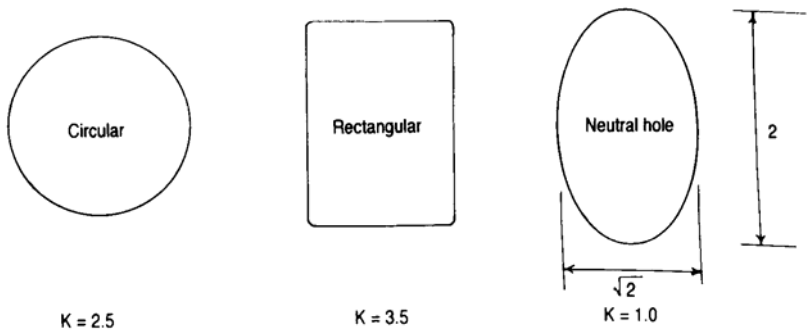

(b) Cut outs of various shapes. The 'neutral hole' with proportions 2:√2 causes no stress higher than the hoop-stress, $2P_t$. K = maximum principle tensile stress/$2P_t$.

Fig. 11.15 Shapes of cutouts in skin.

It may be shown that a cutout of elliptical form with the proportions 2: V2 is neutral in its effect upon the overall tensile stress concentration, in that the maximum principal tensile stress in the vicinity of the hole is no greater than the hoop stress. The principal tensile stress factor for each cutout, K, is given by:

K = maximum principal tensile stress / hoop stress, 2 p_t (117)

Many airliner windows are variants of the 'neutral-hole'. The variants lie between the pure neutral-hole form and the rectangular, 'corners' being introduced to improve the view. The stresses caused by pressurization must be added to those already mentioned. Pressurization is increased with height and hence the pressure differential varies from zero to some required value each time an aeroplane flies. As such it must be taken into account in the calculation of fatigue and airframe life. As airframes grow older the pressure differentials, and consequently operating heights, are usually reduced as a means of reducing the tensile stress levels.

11.4.2 Beams, booms and grids

We have seen how the skin and internal structure of an aeroplane is made to work in shear and tension, the final view is of the behavior of the structure as a family of beams, i.e. in compression as well as tension and shear. If the aerofoil surfaces can be approximated to thin-walled tubes, flattened about one axis, then such flattening works against the general value of the tube as a member able to resist bending.

Wing spars are a development of the simple beam designed to take bending and shear loads. The type of beam we are most concerned with in aircraft work is the cantilever variety, which is supported at one end only. However, other types of beams, usually having encastre or ‘built-in’ fixing at both ends, are met with in component design. Examples are bomb-bay structures and floor-beams running across a number of frames.

The weight of material making up a spar depends upon the length and cross-sectional area. For greatest efficiency spars must have the greatest area of cross-section furthest away from the neutral axis: the moment of inertia of the cross-section about the neutral axis must be a maximum. In Fig. 11.16(a) a spar is loaded with a shear load, W, which is reacted at a distance x further away along the spar.

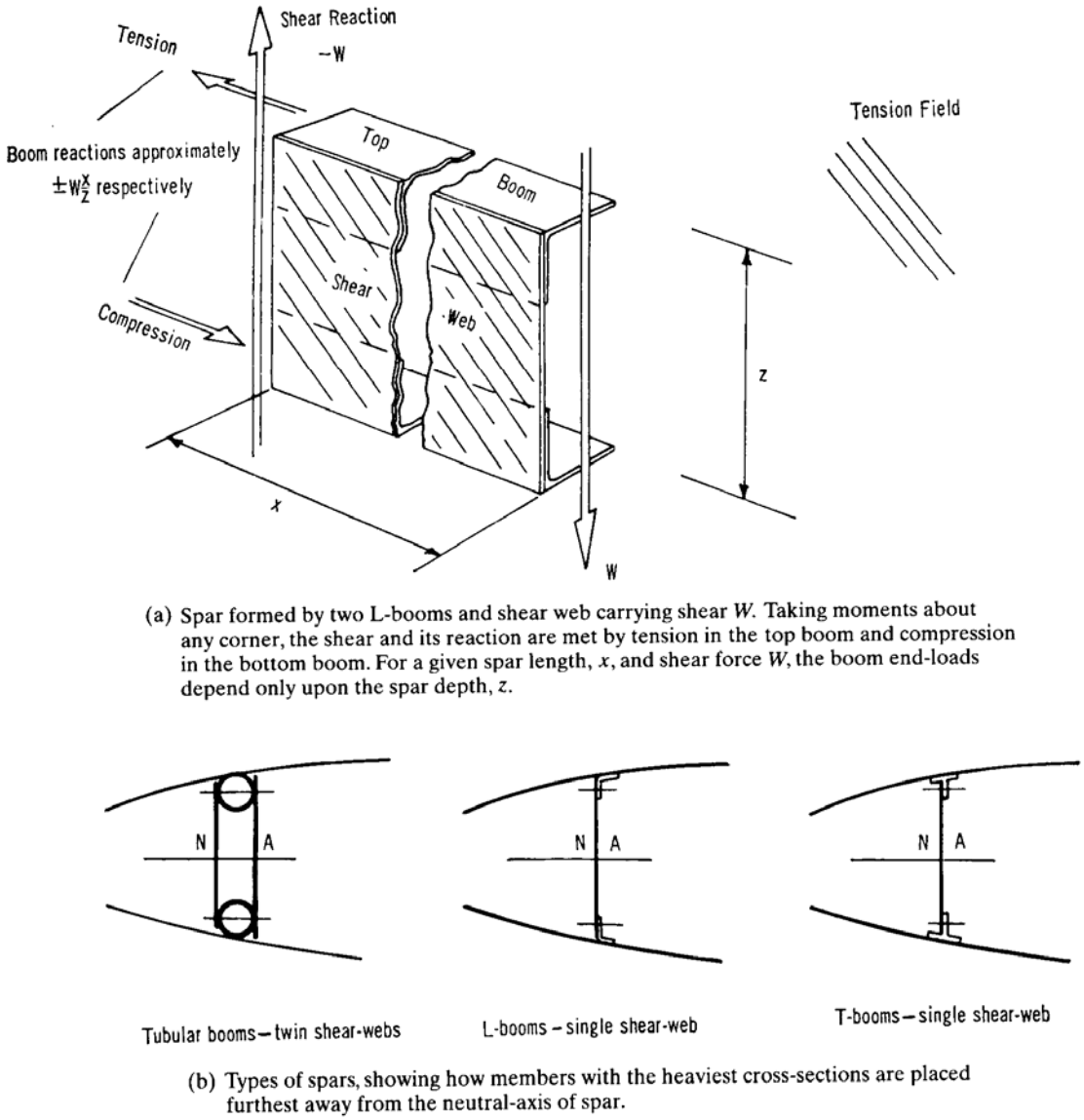

(a) Spar formed by two L-booms and shear web carrying shear W. Taking moments about any corner, the shear and its reaction are met by tension in the top boom and compression in the bottom boom. For a given spar length, x, and shear force W, the boom end-loads depend only upon the spar depth, z.

(b) Types of spars, showing how members with the heaviest cross-sections are placed furthest away from the neutral-axis of spar.

Fig. 11.16 Wing spars.

The moment of the shear force is W x and this is reacted by end-loads in the top and bottom booms. If the moment is 100,000 lb in and the depth of the spar, z, is 20 in then the tension in the top boom is around 100,000/20, i.e. 5,000 lb, and the compression in the bottom boom is also 5,000 lb. If the same bending moment must be met by a spar of half the depth, then the end-loads in tension and compression are 10,000 lb, respectively. In fact we have erred on the dangerous side by using the spar depth overall, the depth we should have used is the distance between the centroids of the booms, a smaller distance. Even then the calculation is approximate, serving to make the point that the deeper a spar the smaller are the end-loads in the booms and, therefore, the lighter is the required structure. The minimum amount of material needed in a cross-section depends also, of course, upon the required levels of shear and bearing strength needed.

From the foregoing we deduce that the thicker a wing in absolute measure the lighter it will be. A delta wing is lighter than a straight or swept wing with sections having the same thickness distribution or, weight for weight, a delta wing can be designed with a finer section. This means that there is a ‘trade-off’ as it is called between structural and aerodynamic design. One may have a thin very low drag delta wing with more surface area than straight or swept versions, and relatively simple high-lift devices, or one may have smaller straight or swept wings with more complicated high-lift devices. The choice is not as simple as it might seem, however, for it depends upon stability, control and a number of other factors. The uncertainty accounts for the large number of straight, swept and delta planforms one sees around the world on aircraft designed for similar

(usually interceptor) roles.

The relatively simple structure shown in Fig. 11.13 cannot be used in more advanced layouts. The arrangement of spars and supporting ribs which serve to maintain profiles and to transmit diffuse aerodynamic loads into concentrations of members give way to more complex arrangements of many spars and many ribs, all of which behave rather like a flexible network of intersecting beams. An arrangement of this kind is shown in Fig. 11.17, for a M = 2.2 SST designed in 1960 by the College of Aeronautics. The spars and ribs form a structural grid, which is again reproduced in the fin. The box-like cells formed within the wing structure contain fuel.

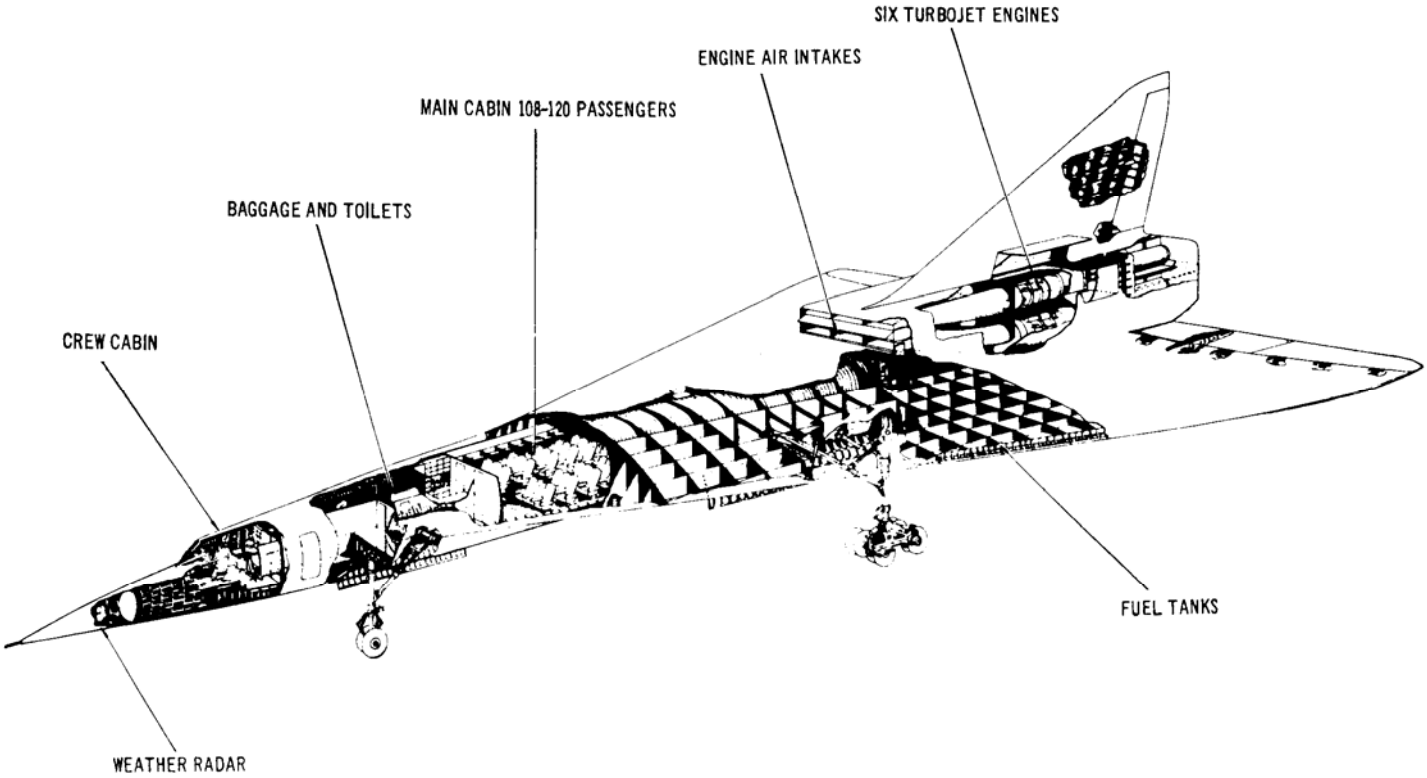

Fig. 11.17 Advanced structure of an integrated M = 2.2 supersonic transport (College of Aeronautics, Cranfield, 1960).

The analysis of stress and strain in advanced aircraft structures has forced the development of very elegant and complicated mathematical techniques. The structural engineer must relate the effects of weights, aerodynamic inputs, elastic responses and stress distributions through-out the structure as one whole, for a wide variety of different shapes. Fortunately, the grid-like construction allows accurate analyses to be made and translated into mathematical statements that can be handled by computers.

11.5 Fabrication

Early aeroplanes were made of spruce, fabric and piano-wire, and this form of construction is still to be found in some light aeroplanes. Later the welded steel tube framework, fabric covered, became the standard for light-aircraft engineering, with plywood-sandwiched balsa wood as a good material for light monocoque structures.

Airframes made from strip and sheet metal are riveted, welded, or stuck together with special glues. Sheet metal is provided in a number of standard thicknesses, called gauges, and one uses the next thickness of gauge above the required thickness of material as determined by stress analysis. In the pursuit of efficiency and low weight in large aircraft one must turn to more expensive methods of manufacture. Using gauged sheet, that is manufactured in stock sizes within certain tolerances, it would be possible for an aircraft with a wing area of 2,000 ft^2 to show an increase in weight of 3,000 lb if the skin was on the high side of the tolerance. American aircraft repaired in the UK, using British standard gauge materials, may be heavier than their American counterparts, because the Americans have a more finely graded range of gauges from which to choose.

Modern manufacturing techniques involve machine milling of skins and stabilizing members as complete units from solid billets of material. Machining is expensive, but for large, costly aircraft the expense is worth the dividends. Chemicals are used to etch and dissolve away unwanted metal, and the use of chemicals and machining in this way enables structures to be made with fewer joints. Weaknesses usually originate in the joints and their elimination enables the behavior and life of the structure to be predicted with far greater accuracy.

New techniques are being introduced in the manufacture of light aeroplanes and other low subsonic aircraft that have become so long established as to be rated ‘traditional’ designs. Skins can be made of fiber-glass, or plastic sheet sandwiching foam-plastic or honeycomb filling. Honeycomb structures — in effect corrugated walls forming hexagonal cells, in which the walls run more or less at right angles to the confining skin — can be made in both plastic and metallic materials, welded or bonded together. Thin metal skins have been successfully stabilized by bonding foam-plastic sheeting on the inside. A test example, for a light aircraft, featured 0.25in polyvinylchloride (PVC) foam sheet bonded to 30swg (0.0124 in) sheet aluminium. The aluminium, which is normally structurally useless in the pure state, became as stiff as 18swg material (0.048 in), with a weight equivalent to 22swg (0.028 in).

We have seen how structures are built up and the part that they play. It is useful to see how the weight of the structure is affected by the shape of the aeroplane, and the effect this can have upon the final design.

Chapter 12 The Final Aeroplane

Low wing loading is the most important parameter of all affecting the operation of an aeroplane. In the early days wing loadings were low to enable aeroplanes to operate from small fields. With the coming of the flap, designers tended to forget that the slower one landed the safer the landing. The tendency was to look towards the combination of high wing loading and high performance. In the 20 years from 1930 wing loadings increased from 12 lb/ft^2 to 60 lb/ft^2, while modern wing loadings approach 120 lb/ft^2. Unfortunately, high wing loadings are essential if aeroplanes are to remain competitive. As we have seen, variable geometry is helping to reduce the trend, while the bypass engine provides high thrust/weight on takeoff (thus keeping take-off time as short as possible) and good cruising economy. The large percentage weight of fuel burnt by the jet aeroplane helps to ensure a comparatively low wing loading for landing.

The structure weight has the largest potential effect upon the eventual wing loading, while the weight of the structure depends in turn upon the shape of the aerodynamic surfaces and the materials used in construction. Let us look at the effect of aerodynamic shape upon weight.

12.1 Physical factors affecting weight

The structure consists of wing, fuselage, engine nacelles, tail-unit and landing-gear, and the weight of these items is influenced by many factors. The calculation of structure weight, all-up weight and the resulting centre of gravity involves many estimates and approximations and we shall only look at the subject in the broadest of terms.

12.1.1 Wing weight'

The general principles applying to the weight of wings applies to aerofoil surfaces of all kinds, so that in saying, for example, that a swept wing is heavier than a straight wing, we are also saying that a swept tail is heavier than a straight tail. Two factors are important in their effect upon wing weight: the structural aspect ratio and the thickness ratio of the aerofoil sections used. The aerodynamic aspect ratio, A, is shown in Eqn (5-11) to be a function of span^2, the span being measured from tip to tip along a line normal to the axis of symmetry of the aircraft. Bending takes place along the flexural axis of a wing, however, which is usually inclined at some other angle to the axis of symmetry. Very roughly the structural aspect ratio A_S is given by:

$$A_S = \frac{A}{\cos^2 \Lambda}$$

where Λ is the angle of sweep of the one-quarter chord-line.

The greater the aspect ratio of a wing the greater the bending moment of the lift at the root. As the actual thickness of a high aspect ratio wing (i.e. not the thickness ratio of the section) is usually less than that of a wing of lower aspect ratio with the same area, then the heavier is the structure, because of the smaller depth of spar and higher end-loads in the booms (Fig. 12.1). A swept wing requires additional structural strength to resist torsion caused by sweep, and this results in a heavier structure.

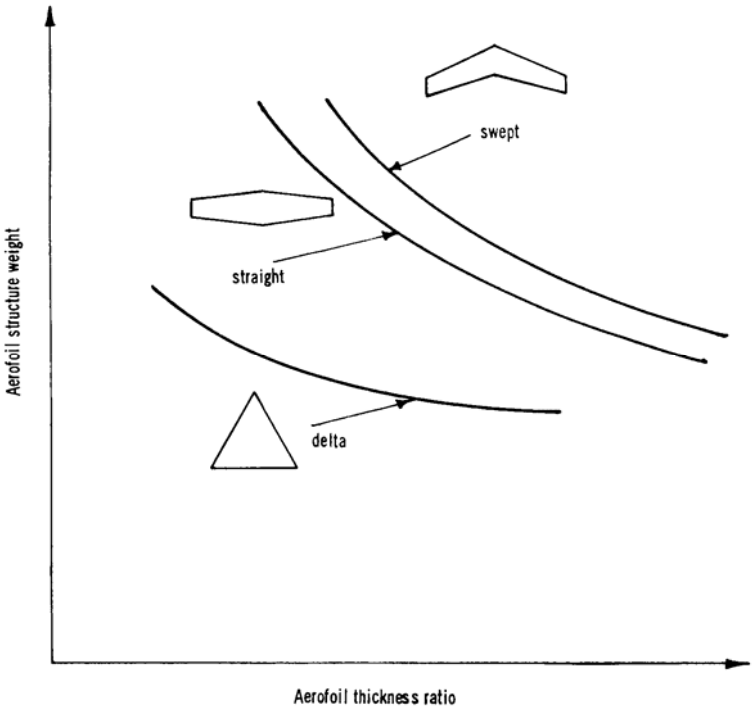

Fig. 12.1 General trend of wing weight for different planforms lifting the same all-up weight.

Wing structure weight is relieved by inertia loads distributed across the span. Wing tip mounted fuel tanks and integral tanks distributed far outboard, engines and stores of various kinds all provide bending relief and enable lighter structures to be designed. The swept and delta aircraft shown in Fig. 8.14 have low structure weights because their sections are very deep in order to provide accommodation.

Planform affects the weight in the way of stiffness that must be built into the structure to resist control reversal and flutter. Flutter is a cyclic, high-frequency oscillation of the aerofoil surfaces caused by a struggle between the aerodynamic forces and the stiffness of the surfaces. Flutter is dynamic, arising from a wing, tailplane or fin being relatively free in bending, so that an aerodynamic load caused by a gust or control movement causes distortion. As the structure deflects the reacting moment increases, until action and reaction balance. When the gust or control movement ceases the structure springs back, overshooting its original position. The inertia and 'trail characteristics' of the control surfaces can modify the overall aerodynamic state, so that the initial disturbance is increased or the tendency to overshoot the original condition is increased. This can lead to a cyclic 'fluttering' of the structure which, if it does not subside, can be catastrophic, or may severely reduce airframe life. High aspect ratio surfaces are more flutter-prone than those with low aspect ratio. Podded engine installations are usually combined with high aspect ratio swept wings to provide anti-flutter mass-balancing and, hence, a lighter wing structure. A podded engine slung forward of the flexural axis of the wing causes a nose-down torque, reducing the angle of attack and lift, thus countering the initial disturbance that increased the lift and caused displacement in bending.

The effect of aspect ratio on the weight of the wing is very marked. A wing with a high aspect ratio carries the lift further out from the root and the bending moments, boom sections and weights are larger than those of a wing of smaller aspect ratio. One must be careful not to generalize too readily, however, because once the aspect ratio is calculated for a given aircraft a decrease in the value (signifying a smaller span) results in an increase in structure weight. We may deduce that there is an optimum aspect ratio wing, and this is shown in Fig. 12.2. The increase in structure weight at smaller aspect ratios is caused by the additional wing area needed to compensate for the decreased efficiency of the wing as a lifting member. The increased weight at higher aspect ratios is caused by the need to meet increased bending moments.

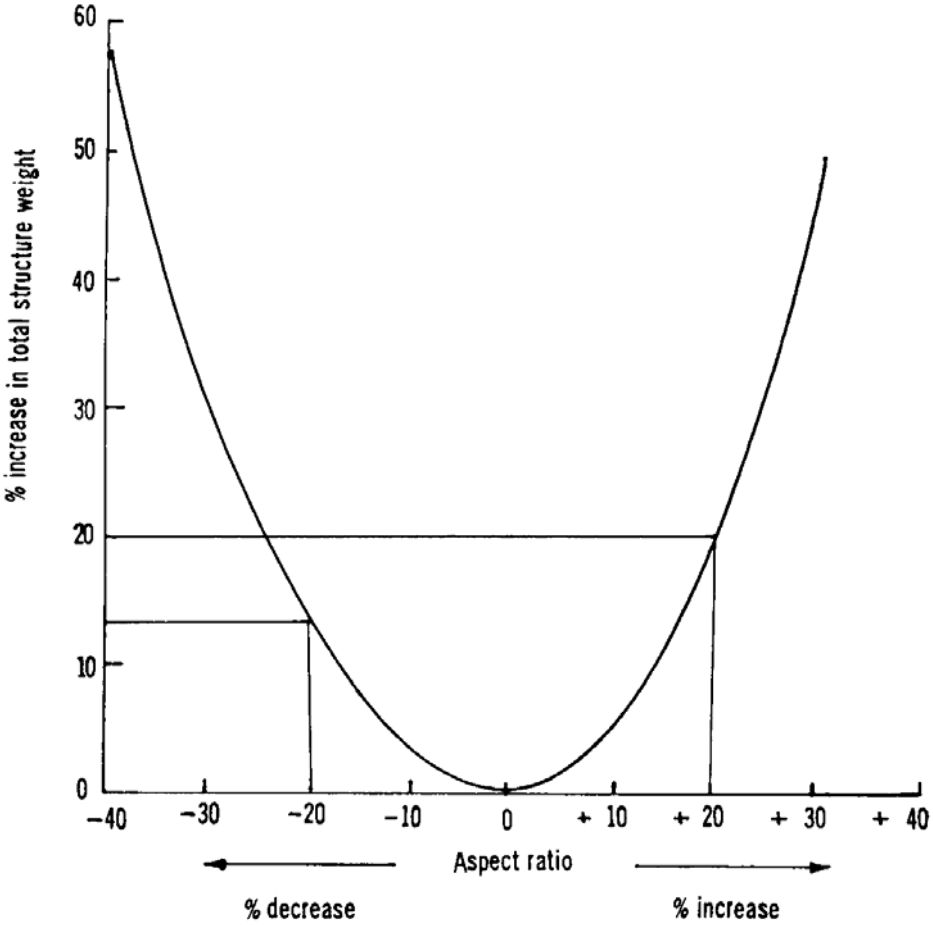

Fig. 12.2 Effect of a change of aspect ratio from the calculated 'ideal' for a given aircraft upon the total structure weight. Section thickness/chord ratio constant.

Modern aeroplanes have aspect ratios of 11 or 12:1, although 14:1 is generally thought to be the economical limit. Sailplanes are exceptional and may have ratios of 30:1 or more. High aspect ratio wings invariably have thick skins and heavy spar booms, or many stringers.

At subsonic speeds the low aspect ratio wing is inefficient aerodynamically, but may be of great use structurally. An example is the use of low aspect ratio on a low-altitude strike aeroplane designed to operate in dense air at high EAS. The shallow slope of the lift curve of such a wing prevents the structure suffering large changes of stress from atmospheric turbulence. Because the lift increments are smaller for a given gust, bending, torsion and normal accelerations are reduced. The whole structure can therefore be made lighter than would have been the case with a wing of longer span and greater aerodynamic efficiency.

Taper is used to reduce wing structure weight, the inboard shift of the lift reducing the bending moment, but it can be a nuisance and may lead to complications. The Supermarine Spitfire and Hawker Tempest of World War II might have had straight taper but featured elliptical planforms instead, that were harder to produce. It was commonly thought that the elliptical wing was used to reduce lift-dependent drag to make the fighters faster. In fact the elliptical planform gave greater spar depth and gun stowage volume outboard of the undercarriage units, while allowing sections of reduced thickness ratio to be used that had lower zero-lift drag.

12.1.2 Fuselage weight

Every fuselage has a limiting minimum cross-section and forms two cantilever beams, one forward and the other aft of the centre-section structure. The deeper the fuselage section for a given cantilever length, the lighter the structure. As the minimum volume of the fuselage is determined by what it must carry, structure weight can be saved in large aircraft by building 'double-bubble' fuselages which effectively increase the depth without destroying a reasonable fineness ratio. Although fuselages for supersonic aeroplanes are nearly twice as long as their subsonic counterparts, the structure weights do not increase in the same ratio. The lower aspect ratio of the supersonic machine results in a much longer centre-section structure which provides support, shortening the cantilever lengths of the overhanging nose and tail.

Figure 12.3 shows in a general way the effect of wing planform upon the length of cantilever for three geometrically similar fuselages. The swept wing of high aspect ratio has the heaviest fuselage structure weight, because of the dominance of the rear fuselage in the effect upon the whole. It must be remembered too that the rear fuselage must be strong enough to support the stabilizers. The landing case is the most

critical for a large aircraft, the weight of the fuselage depending upon the strength needed to meet the pitching inertia loads.

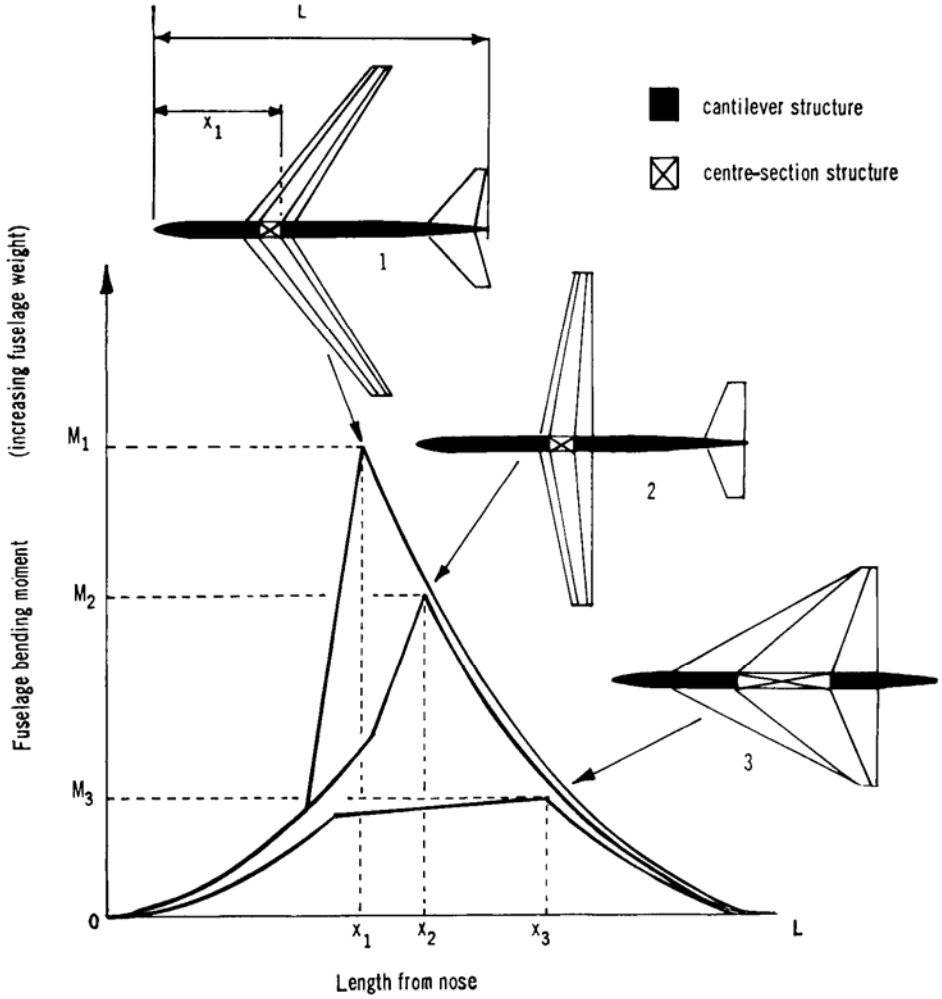

Fig. 12.3 Generalized effect of planform on fuselage weight for a given payload. The landing case determines the critical bending moment governing rear fuselage weight, which in turn dominates the fuselage weight equation. Fuselage 1 is the heaviest and fuselage 3 the lightest.

Fuselage weight increases with cabin pressure differential, because of the tendency of the skin to split like a sausage. If the fuselage diameter is increased with a given pressure differential then the fuselage structure must grow heavier - the reverse of what applies for a simple beam (the weight of which decreases with increasing depth) - because the hoop stresses, set up in the skin by the pressure acting over a greater projected area, increase with fuselage diameter.

The shape of fuselage cross-section affects the structure weight, in that the amount of structural material is a function of the surface area. A rectangular section has a longer circumference than a circular or elliptical section having the same overall dimensions. One might expect a fuselage with a square cross-section to be some 30% heavier than one having the same overall dimensions and a circular section.

Most aeroplanes have nosewheel undercarriages and the cantilever forward fuselage must be strong enough to take loads from the nosewheel unit. The greater the all-up weight the stronger must be the forward fuselage.

12.1.3 Powerplant and fuel weight (turbojet engines)

For a given thrust and EAS the higher an aeroplane is to fly the heavier will be the required engine. The reason for this is that high-altitude engines must have bigger cross-sections -greater swallowing capacity - than engines designed for efficient operation in the denser air low down. Area is a function of the square of the linear dimension, while weight is a function of its cube. Therefore for a given standard of design merit, the specific weight of the engine:

$$\bar{p} = \frac{\text{engine weight}}{\text{net thrust}} \qquad (12\text{-}2)$$

increases with altitude. The specific weight must be related to a representative height and speed, i.e. to the design point. The aerodynamic efficiency of the aeroplane changes with design point and Eqn (12-2) can be usefully developed in the form:

$$\bar{p} \text{ varies as } \frac{\text{engine percentage weight}}{\text{net thrust / weight}} = \left(\frac{L}{D}\right)(\text{engine percentage weight}) \qquad (12\text{-}2a)$$

Specific weight increases roughly as the 3/2 power of the thrust, which is a function of the pressure within the engine: the higher the pressure the greater the weight of material to provide the required strength. On the other hand, specific weight falls with increasing design EAS, because of the increasing overall efficiency of the jet engine as a prime mover. However, once the speed is high enough for kinetic heating to be a problem the specific weight begins to increase, because more material must be added to the engine structure to offset the effect of 'creep': lengthening of, for example, the compressor blades with elevated temperature caused by diffusion of the air in the intake ducting.

The practical determination of specific weight is not as easy as it might at first appear, because the definition is not embracing enough to be universal. It is hard to agree what exactly constitutes 'engine weight'. In the case of a turbojet the weight of intake and tailpipe, and all of the associated variable geometry mechanisms, may equal the weight of the bare engine. If a unit is suspended in a pod more or less outside the main structure of the aeroplane, then one might reasonably count the weight of wiring, controls, mountings and cowlings under the heading engine weight. When this is done it is usually better to refer to powerplant weight instead.

On the side of bare engine weight alone a modern turbojet with a reasonable working-life expectancy has a specific weight around 1/5. A special short-life, or lightweight engine may have a specific weight around 1/7, while a lifting engine must achieve 1/10 to 1/15 lb weight per lb thrust. The values given refer to net thrust at sea level. At the tropopause the values would be about three times higher, because the thrust is less.

Because of the 'square-cube law' that causes big engines to become heavy, one must resort to some complexity in order to reduce specific weight. Assuming engine thrust to be proportional to intake area, all else remaining equal, the total engine weight can be shown to vary theoretically as $\frac{1}{\sqrt{n}}$, where *n* is the number of engines used to generate the required thrust. Thus, two smaller engines weigh something like 75% of the weight of a single engine giving the same thrust. Three engines are around 60%, and four engines around 50% of the single engine weight. As the number of engines is increased, however, the weight of control and fuel systems increases too, and the overall specific weight does not show the same theoretical trend as the bare weight. The square-cube law is also affected by the unavoidable fact that small engines suffer from (relatively) large nuts, bolts and other standard items. And their smaller scale results in lower component efficiencies.

One cannot aim to increase the number of engines in a design without due regard to economics. A large number of small engines cost more to manufacture and maintain than a smaller number of larger engines. For example, two engines used to produce the same thrust as one larger engine for the same task would cost 42% more in total. Increasing the number of engines increases the probability of sympathetic failure, as well as the number of actual failures for the same engine mean time between failures, and this will be reflected in the maintenance costs. The principal advantage of a multi-engined installation is the overall increase of safety factor and a possible reduction in the installed thrust if the engine-failed climb-out is a design requirement.

Fuel consumption is proportional to thrust and specific fuel consumption (Eqn (4-9)). Therefore, the weight of fuel carried for a given job and standard of design merit will vary as the engine weight. For simple analyses, powerplant plus fuel weight is often considered as one whole. The more efficient an airframe structure, the more the fuel that can be carried and the further an aeroplane will fly.

12.1.4 Equipment weight

The weight of equipment carried by an aeroplane to make it efficient in its operational role depends upon both the role and the duration of a sortie. In the case of a passenger transport, there must be provision for seating, furnishings, galley, toilet, air-conditioning and sound-proofing, all of which affect the total weight. The volume per passenger more or less establishes the size of the fuselage. It happens that the surface area of a fuselage is linearly related to the two-thirds root of its volume, and the volume occupied by passengers is roughly three-quarters of the fuselage volume. For a given standard of comfort (the greater the comfort the greater the weight of furnishings and equipment), the equipment and fuselage weights are related almost linearly, the fuselage weight per passenger varying with the number of passengers.

The net result of the connection between equipment weight and fuselage weight for a passenger aircraft is that the equipment weight is almost a constant percentage of the all-up weight. Navigational and other equipment is heavy, so that one cannot generalize too much; the standard of navigational equipment of course varies with the size of aircraft and the route facilities available. The more advanced the aeroplane, the more flight equipment that must be carried to enable it to operate efficiently.

12.2 Design requirements affecting weight

We saw in Chapter 4 that the flight envelope of an aircraft is rationalized, for the purposes of safe and efficient design, by the introduction of a basic maneuvering envelope and a basic gust envelope, shown as V-n diagrams in Fig. 4.4. An aircraft is designed in such a way that it should not fail structurally anywhere within the flight envelope, when handled properly. To cater for a certain amount of mishandling and rough treatment the maneuvering and gust load factors are increased (i.e. factored again) and the structure is designed to meet the increased values.

12.2.1 Load factors

From an investigation of the flight regime covered by a given design case an estimate is made of the largest load that is likely to occur under operational conditions. This is called the limit load, or unfactored load and corresponds with the V-n diagrams of Fig. 4.4. By multiplying the limit load by the ultimate factor of safety, varying from 1.5 to 2.0, the ultimate load is obtained. The ultimate load is the load that the structure must withstand without collapsing, and the structure weight is a function, therefore, of both the limit loads and the ultimate factors of safety involved.

It is very difficult to design a structure that will have exactly the required ultimate factor of safety at every point, and one usually finds that the safety factor is exceeded by a safe margin. It is useful to know how much reserve strength lies in a structure, especially when designs will probably have to be stretched to meet future requirements. The reserve factor is the ratio of the actual strength to the specified strength. In British practice it is never less than 1.0, whereas the Americans quote the ratio minus unity, and in their system the result must never be less than 0.

The ultimate load is achieved beyond the yield point of a material, and a structure shows signs of permanent deformation long before actual failure occurs. To ensure safe design, structures must be proof-loaded to a certain limit without showing signs of detrimental distortion. The proof load is obtained by multiplying the limit load by a factor sometimes as little as 1.0, sometimes as much as 1.33. If, for example, an ultimate load is 1.5 X limit load and the proof load is 0.75 X ultimate load, then the proof load will be 1.125 X limit load.

12.2.2 Design for reliability and maintainability

One cannot think of design and weight without also taking some account of fatigue life and the requirements of reliability and maintainability. The life of any part of the aeroplane depends upon many things: cyclic variations of loading, heat, cold, moisture, wear and corrosion. The life of the aeroplane depends upon the individual life of the parts. The designed life of a part has a direct effect upon its strength and therefore weight, and vice versa. It almost goes without saying that the life of the whole aeroplane must be matched to its role. An example is the design of the transatlantic transport aeroplane. On such a competitive route, with fashion playing an important part in passenger appeal, it would be unwise to build an aeroplane to last for as many years as, say, a utility transport for the Australian outback.

Life and failure hazard

A number of similar components all have different lengths of life under the same operating conditions, and 'life' becomes instead the more meaningful and convenient *mean time between failure*, or MTBF, expressed in hours. In this way the failure hazard can be expressed as the probability of a single failure in a particular period of time. If a piece of equipment has a probability of failure of 1 in 10,000, then the risk of failure is expressed as

$$Q = \frac{1}{10000} \quad \text{or} \quad 0.0001 = 10^{-4}$$

and the probable reliability (which is unknown without extensive testing):

$$R = (1 - Q) \text{ or } 0.9999 \qquad (12\text{-}3)$$

The overall reliability of a system is a product of the individual reliabilities of the components:

$$R = R_1 \text{ x } R_2 \text{ x } R_3 \text{ x} \ldots R_n \qquad (12\text{-}4)$$

A system with 100 components each with a reliability of 99% has an overall reliability of something like 37%. If the reliability of each is only 98%, then the overall value drops to about 14%; this is shown in Fig. 12.4(a).

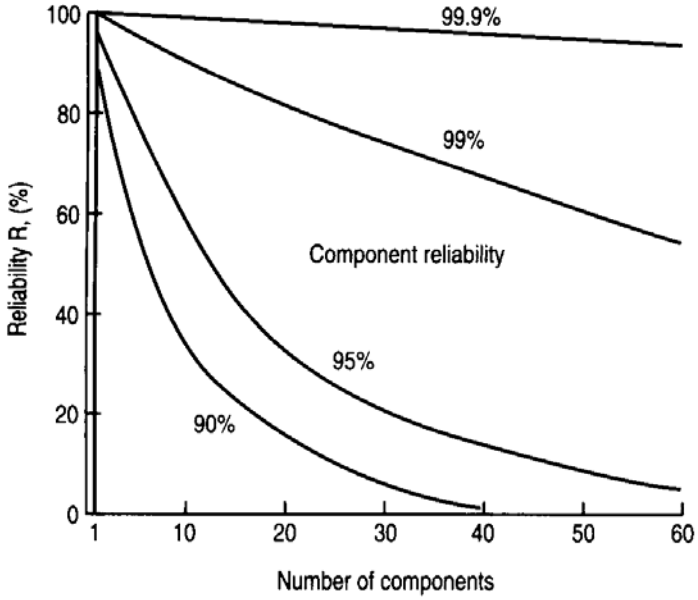

(a) Overall reliability as a function of the number of components and the individual reliability of each.

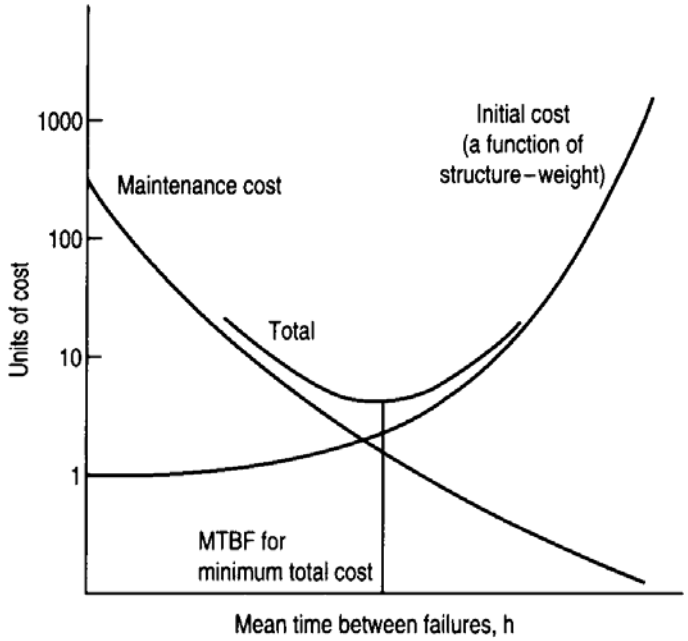

(b) Typical variations of initial, maintenance and total costs with M mean time between failure.

Fig. 12.4 Reliability and life of equipment.

The total cost of an aeroplane depends upon the first cost, a function of the structure weight, and upon the maintenance costs. The first cost rises with MTBF while the maintenance costs decrease inversely with MTBF. The cost of optimum reliability, of optimum 'life', is therefore the minimum total cost shown in Fig. 12.4(b). It is worth remembering at this point that an aeroplane represents a set of compromises determined by economic necessity.

Maintainability

An aeroplane is maintainable if defects can be simply and quickly serviced, i.e. parts can be adjusted, repaired and replaced after failure. There is a connection between MTBF and the degree of accessibility that must be provided for a component. Accessibility and long MTBFs both affect the ultimate weight of an aircraft: accessibility because of the number of cutouts and compensatory weight in a structure, design MTBF because of the weight of all lifed components.

Fail-safe, inspect-safe and safe life

The breakdown of weight is affected by design for fail-safety or inspect-safety. A fail-safe structure is one in

which the limit load can still be met even though one of its elements has failed. Such a structure tends to be heavier than an inspect-safe structure, because in the first alternative load-paths are provided, while in the second accessibility enables inspectors to detect potential failures before they become catastrophic.

It is becoming standard practice to estimate the safe life of a structure from fatigue tests, carried out on specimens of the more highly stressed tensile members of the structure, such as spar booms. Such tests are designed to produce a tensile load in the member equal to that in steady flight, and on top of this is imposed a small fluctuating load corresponding with an up-gust immediately followed by a down-gust. By means of the S-N curve, similar to that shown in Fig. 11.8, and assuming that damage is cumulative, it is possible to relate the tests to particular critical flight conditions. In this way, by factoring the laboratory life of a specimen, one may calculate a statistical safe life in flying hours. The accuracy of the method depends upon the accuracy of estimation of the conversion factor, which depends in turn upon the way the tests are carried out and, less predictably, a knowledge of the expected flight conditions. Much work has been done throughout the world in the measurement of gusts at different altitudes on different routes, so that unnecessary weight might be pared away from the structures of advanced aircraft. The method is applied in retrospect for the assessment of expected life of aircraft already in service.

12.3 Weight breakdown

The proportional weight of each component to the all-up weight is not constant, but varies with role and design point within a flight regime. Tables 12-1 and 12-2 show, very approximately, the variation in percentage weight of the more important items, with respect to both role and flight regime. The first three aircraft: the sailplane, the light/executive and the transport, are all subsonic. The last three: the SST, the fighter and the bomber, are all supersonic. The figures are very general, the first four being digested from published figures, the last two being estimated for the purpose of the tables. Table 12-3 has been added to give substance to Tables 12-1 and 12-2.

Table 12-1 Breakdown of all-up weight

Item		Approximate percentage all-up weight					
		Sailpane	Light and executive aircraft	Subsonic transport	Supersonic transport	Supersonic fighter*	Supersonic bomber*
Powerplant		—	23	18	15	20	13
Fuel	Disposable load	—	(10–15)	(22–31)	(45–50)	(25–30)	(50–55)†
			35	40	55	35	58†
Payload	Disposable load	36	(20–25)	(9–18)	(5–10)	(5–10)	(3–8)
Structure		60	30	28	21	32	20 (17 low level)
Equipment and services		4	12	14	9	13	9
Total %		100	100	100	100	100	100

* Unconfirmed estimates.
† Add 3% of AUW for low-level aircraft.

Table 12-2 Breakdown of structure weight

Structural component	Approximate percentage all-up weight					
	Sailplane	Light and executive aircraft	Subsonic transport	Supersonic transport	Supersonic fighter*	Supersonic bomber*
Wing	30	13·5	11	8	12	7 (4 low level)
Fuselage	25	10·5	9	7	12	7
Stabilizers	3	2	3	2	4	2
Undercarriage	2 (+ballast)	4	5	4	4	4
Total %	60	30	28	21	32	20 (17 low level)

* Unconfirmed estimates. For variable sweep add 20% of wing weight, i.e. 2 - 3% of AUW and a further 1 - 2% of AUW for additional services, in Table 12-1. Fuel weight may be correspondingly reduced.

Table 12-3 Typical aircraft parameters

Design parameter	Aircraft					
	Sailplane	Light and executive aircraft	Subsonic transport	Supersonic transport	Supersonic fighter	Supersonic bomber
Take-off thrust loading (W_0/F), lb/lb, or Take-off power loading (W_0/P), lb/hp	—	13	3·9 (jet) 7·7 (turboprop)	2·3	1·8 (dry) 1·3 (wet)	2·5
Take-off wing loading (W_0/S), lb/ft^2	5·2	17	93 (jet) 90 (turboprop)	85	70	95
Take-off span loading (W_0/b), lb/ft	14·75	82	1500 (jet) 1200 (turboprop)	3900	1000	3500
'Slenderness ratio' (l/b)	0·45	0·75	1·1 (jet) 0·9 (turboprop)	2·2	1·7	2·5
Aspect ratio (b^2/S)	18·75	6·9	7·2 (jet) 10·6 (turboprop)	1·8	2·25	2
Cruising $(L/D)_R$	30	14	18	7	6	7

Neglecting the sailplane it should be noted that the light/executive and subsonic transport aeroplanes, being mainly piston-propeller driven, have much heavier percentage weights for the powerplants than do the supersonic jet aeroplanes. If the subsonic transport had been turboprop-driven, then the powerplant weight would have been around 12%, and 9 - 10% for a jet aeroplane. The saving in percentage weight would have appeared as an increase in the fuel and systems weights, because of the increased specific fuel consumptions.

Although the military aircraft estimates cannot be confirmed they show interesting trends. The supersonic fighter must carry a mass of heavy electronic equipment, and requires power services to fulfil its role with a relatively small payload, perhaps two or four guided weapons. The fuel percentage weight cannot be accurately assessed because most fighter aircraft are fitted with overload tanks that grossly alter the original all-up weight. The structure weight of a fighter is high because much larger normal accelerations must be catered for. Large fins cause the structural weight of the stabilizers to be heavier than for any other aircraft. The engine weight is large because a high thrust/weight ratio is required for fast climb, and acceleration at height.

The structure weight of the light aeroplane appears to be large because of aerobatic, or semi-aerobatic design requirements. Stabilizer weights tend to be small because of the large number of single-engine aircraft taken into account, and because of propeller slipstream effects that allow smaller tail areas to be used.

Two supersonic bomber variants are shown, one with a relatively large wing for operations at high altitude, the other with a small wing for low-level strike. The structure weight of the high altitude machine is increased by the larger wing. A low-level strike aircraft would need to carry a lot of fuel to meet the increased fuel consumption, and this would tend to spoil any benefit from reduced weight of wing structure. Bomber payloads are assumed to be low because of the low weight and high yield of nuclear weapons.

The supersonic bomber and transport may be compared very broadly (as may be their subsonic counterparts); both must fly long distances with great economy. The requirement is reflected in the low structure weight and powerplant weight, the choice of powerplant being largely determined by cruise requirements. The low weight of the stabilizers may be favored by the slenderness of such aircraft, for the close-set engines and relatively long tail moment arms reduce the size of fin for engine failure. The subsonic transport, on the other hand, is not slender but has long wings, engines further outboard, a relatively short fuselage, and a correspondingly heavier tail.

The extreme simplicity of the weight breakdown for the sailplane belies the skill and care inherent in its design and construction. The wing is the largest and heaviest component, while the undercarriage is almost vestigial. Advanced structural techniques will probably reduce the structure weight and all-up weight still further in future. The large percentages of structure weight and payload are due to there being little else to such aircraft.

Variable geometry in the way of variable wing sweep imposes a weight penalty that shows up in the wing structure weight and the weight of operating mechanism. Less fuel is needed, however, so that the apparent structural penalty becomes hidden by the beneficial effect reflected in the disposable load. The wing may be heavier, but the fuel carried may well allow the aeroplane to fly further, or carry more payload. If more payload is to be carried then there will be a corresponding increase in fuselage and equipment weights.

The figures given in the tables are general in the extreme, in most cases differences of 0.5 % have been ignored, yet 0.5% could mean a difference of anything from 15 to 1,500 lb, depending upon the aeroplane concerned. In this respect they do not give a fair impression of the effort put into saving weight. A modern aeroplane starts as a mass of raw materials costing a few pence per pound and ends as a

complicated and expensive machine with value increased one hundred-fold or more per pound of equipped airframe weight (Eqn (3-2)). When weight breakdowns are seen in the light of economics, the importance of fine differences in percentage AUW fall into better perspective.

12.4 Centre of gravity and wing position

Throughout the book we have talked as though the centre of gravity and wing position had already been fixed, so that it would then be possible to show how the resulting shape of the aeroplane depended upon a number of other factors. In fact one must make an enlightened guess as to the **CG**/wing relationship at an early stage in design, work out the sizes of surfaces, probable performance, strength and weight of the parts of the aeroplane, and then return to the **CG**/wing calculations, perhaps several times.

12.4.1 Calculation of CG

The **CG** of a body is the point about which the sum of the moments of the masses of all of the parts is zero. The point lies, therefore, on the line of action of the total weight. To calculate the **CG** a datum is fixed, the sum of the moments about the datum taken in the required plane, the sum is then equated to the moment of the total mass about the same datum, from which can be calculated the moment arm of the total mass from the datum. The moment arm is the distance of the **CG** from the datum. In practice one uses the weights of the masses under the influence of gravity. For the purpose of calculation the same acceleration can be assumed to act in any required direction, so that the CG position can be calculated in any required plane.

Figure 12.5(a) shows an arbitrary arrangement of masses with weights W_1, W_2, etc. The moments are taken about the datum O with reference to the O-Z and O-X axes to find the **CG** coordinates, $\bar{x}$ and $\bar{z}$, respectively. The same principle is applied to an aeroplane in Fig. 12.5(b).

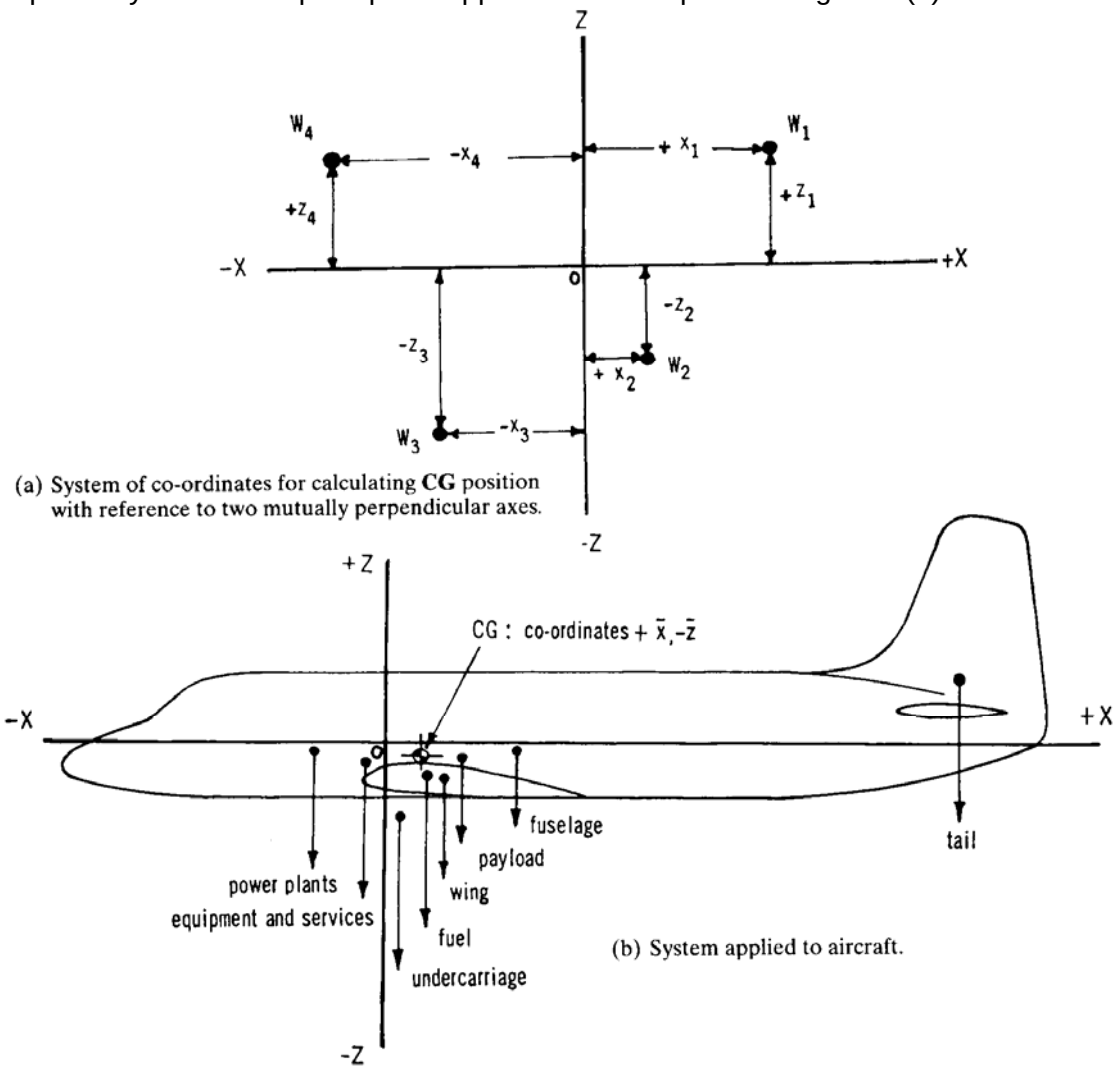

(a) System of co-ordinates for calculating **CG** position with reference to two mutually perpendicular axes.

(b) System applied to aircraft.

Fig. 12.5 Approach to **CG** calculations.

In practice the vertical position of the **CG** can often be guessed, being about level with the passenger seats in a low-winged aeroplane, and level with the shoulders when high winged. No calculations are involved in the figure, the **CG** of the aeroplane is assumed to lie slightly below the O-X and slightly aft of the O-Z axis, and the lengths of the arrows are unconnected with the magnitudes of the weights.

The centre of gravity can be calculated for Fig. 12.5(a) as follows:

$$W\bar{x} = (W_1 x_1) + (W_2 x_2) + (W_3 x_3) + (W_4 x_4)$$

so that $$\bar{x} = \left(\frac{W_1}{W}\right)x_1 + \left(\frac{W_2}{W}\right)x_2 + \left(\frac{W_3}{W}\right)x_3 + \left(\frac{W_4}{W}\right)x_4 \qquad (12\text{-}5)$$

If there had been *n* parts to the whole, then the terms to include $(W_n/W)x_n$ would have appeared as well. The ratio (W_n/W) is a measure of the percentage weight of part *n*, so that in the calculation of the **CG** position of the aircraft one may conveniently use percentage weights of the units shown in Tables 12-1 and 12-2.

In a similar way the coordinate of the **CG** about the O-X axis, i.e. $\bar{z}$, can be found from

$$\bar{z} = \left(\frac{W_1}{W}\right)z_1 + \left(\frac{W_2}{W}\right)z_2 + \left(\frac{W_3}{W}\right)z_3 + \left(\frac{W_4}{W}\right)z_4 \qquad (12\text{-}6)$$

If a weight W_n is moved or is altered in some way, the effect upon the **CG** can be shown to be

$$\frac{d\bar{x}}{dx_n} = \pm\left(\frac{W_n}{W}\right)$$

i.e. $$\Delta\bar{x} = \pm\left(\frac{W_n}{W}\right)\Delta x_n \qquad (12\text{-}7)$$

and $$\Delta\bar{z} = \pm\left(\frac{W_n}{W}\right)\Delta z_n \qquad (12\text{-}8)$$

This is useful, because if, for example, a wing is 10% of the all-up weight, and if, through redesign, the **CG** of the wing moves forward 1 in, then the **CG** of the whole aeroplane will move forward about 1/10 in.

12.4.2 CG position

For trimmed flight the total lift ahead of the **CG** must equal the total lift behind, and the resultant pitching moment must be zero. For minimum trim drag the **CG** of the complete aeroplane must be so placed relative to the aerodynamic centre of the whole that the moment of the **CG** about the aerodynamic centre just balances the aerodynamic pitching moment. The combination of wing-fuselage-stabilizer alters the aerodynamic centre of the complete aeroplane from the quarter-chord point of the wing alone to a position about 2 or 3% of the mean chord further forward.

The **CG** moves in flight and with different loading conditions. It is arranged to lie between closely controlled limits: the most forward position being around $0.15\bar{c}$ and the most aft about $0.35\bar{c}$. The limits bracket the aerodynamic centre of the wing, which lies around $0.25\bar{c}$. The forward limit is fixed by the elevator power, required to prevent the nose from sinking below a certain speed. If the **CG** is too far forward then the approach and take-off speed must be increased to obtain an adequate airflow over the elevators. The aft limit is set by the most critical neutral point, which depends upon configuration and the stability margins.

For the purpose of calculation early in a design, the wing and undercarriage are considered as one unit. The **CG** lies close to the aerodynamic centre of the wing and it is convenient, therefore, to relate the undercarriage to the wing as one complete unit in the first place. In the trimmed condition in which there is no contribution from the stabilizer, the arrangement of lift, drag, thrust and weight might be as shown in Fig. 12.6. Although thrust equals drag, the thrust line is arranged to lie below the **CG** as far as possible, so that in the event of power failure the aircraft will tend to pitch nose down and so maintain the airspeed.

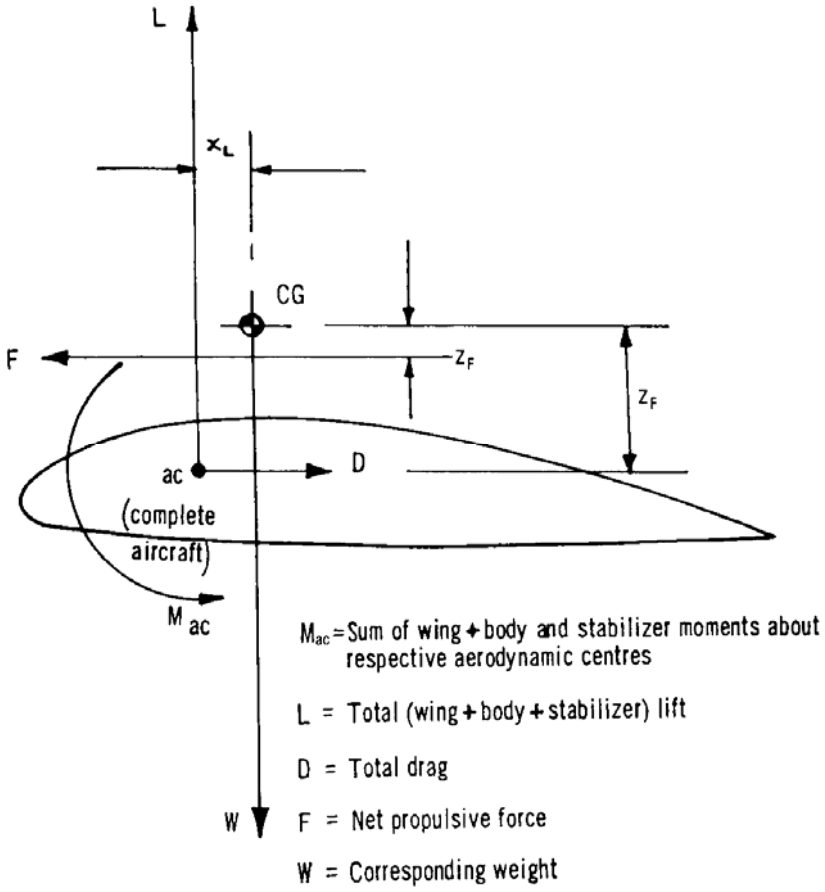

Fig. 12.6. Force and moment relationship between wing and **CG** in trimmed flight.

The moment about the **CG** is given by

$$M_{CG} = -M_{ac} + L_{XL} + F_{ZF} - D_{ZD} \qquad (12\text{-}9)$$

which must equal O in the trimmed condition. The equation can be rearranged in terms of dimensionless coefficients and transposed for the trimmed condition to give:

$$C_{Mac} = C_L \frac{X_L}{\bar{c}} - C_D \frac{z_D}{\bar{c}} + C_F \frac{z_F}{\bar{c}} \qquad (12\text{-}10)$$

The vertical ordinates Z_D and Z_F depend upon the vertical location of the wing on the fuselage, and the position of the engines. Sometimes engines are arranged with the thrust lines well above the wing chord when an aircraft is low winged, so that the engines appear to sit higher than the wings. High-winged aeroplanes often have the engines slung below. In both cases the arrangement reduces the magnitude of $\frac{z_F}{\bar{c}}$ and, hence, change of trim with power. Other aircraft may feature up-thrust or down-thrust, in which the thrust-lines are inclined upwards or downwards, thus reducing the moment of the thrust about the **CG**.

Because C_D is usually much smaller than C_L, Eqn (12-10) is dominated by the lift term $\frac{C_L x_L}{\bar{c}}$. Let us imagine that the equation depends upon this term alone, but that the fore and aft location of the wing is such that the **CG** lies too far aft, i.e. $\frac{x_L}{\bar{c}}$ is too large. Knowing the required **CG** position one may calculate the difference between the two by simple subtraction. Then, using Eqn (12-7), and letting $\frac{W_{(w+u)}}{W}$ represent the combined weight of wing plus undercarriage as a fraction of the all-up weight, the required movement of the wing- undercarriage combination, $\Delta x_{(w+u)}$ can be calculated from

$$\Delta x_{(w+u)} = \Delta \bar{x} \left(\frac{W}{W_{(w+u)}} \right) \qquad (12\text{-}7a)$$

where Δx is the difference between the estimated and required **CG** positions.

If a design has reached an advanced stage and the location of wing root attachments cannot be altered, then the sweep of the wing can sometimes be adjusted instead, to produce the required **CG/ac** relationship. The measure is usually confined to low subsonic aeroplanes, because of the more involved sweep/Mach number relationship at higher speeds. Whenever a planform shows signs of unusual crank one

can be certain that the **CG** is involved. An example of such an alteration is shown in Fig. 12.7.

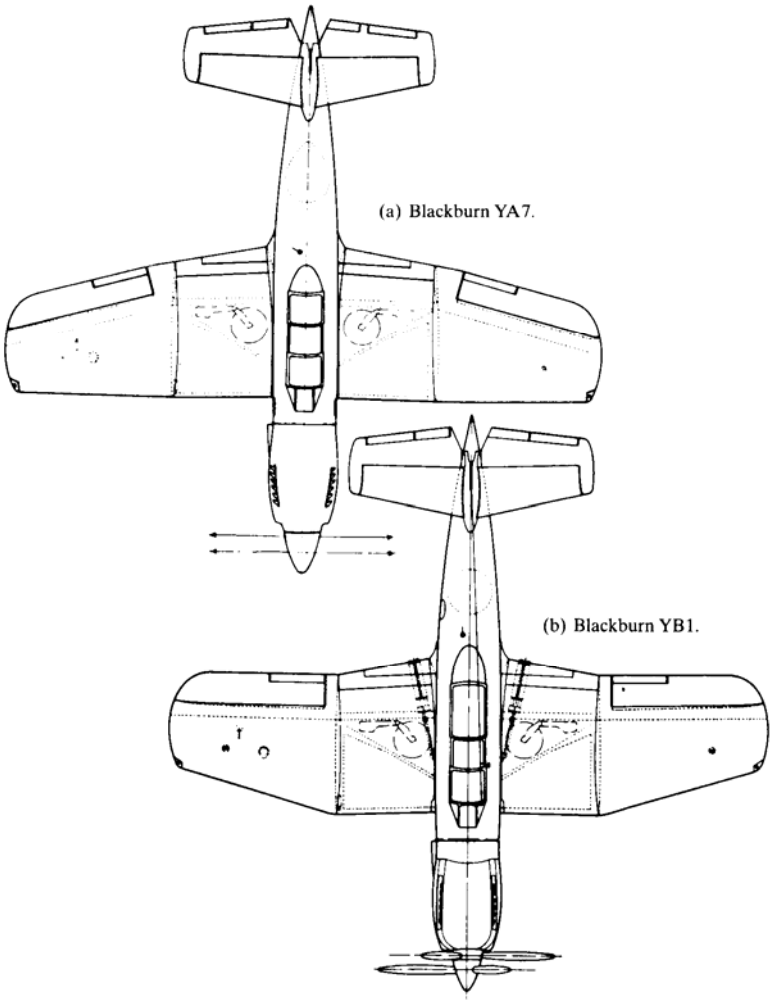

Fig. 12.7 Variation of wing sweep to achieve required centre of gravity and aerodynamic centre relationship. (a) Blackburn YA7. (h) Blackburn YB1 (that had a **CG** further aft than the YA7).

The projected Blackburn YA7, a naval aeroplane of the late 1940s, was re-engined and the equipment changed to make it into the later experimental YB1. Although the basic aeroplane remained largely the same (because of length and span limitations on aircraft carriers) the outer panels of the wings were swept rearwards to achieve the right couple between lift and weight. The inclination of the engine thrust line was also altered.

If the wing cannot be altered, then the engines, fuel, payload and equipment may possibly be moved to achieve the required combination. It must be realized that much of the early work in aircraft layout depends upon the inspired guess, calculations then being made for performance and balance to determine the best arrangement.

12.5 Design method

We have now reached a point in the development of the book where, from considerations of the environment to the final shape of the aeroplane, a summary should be made of aircraft characteristics and the requirements that each helps to fulfil.

In the design of an aeroplane it is impossible to calculate an exact solution at the first attempt, and by now the reason should be obvious. The design of every component is so inextricably related to the design of every other, and to the aeroplane as a whole, that no single element can be fixed with enough finality at such an early stage. All is compromise, followed by further compromises, and so on *ad infinitum*. Much of the art of aircraft design depends upon judging when to stop. The ability to make such a judgement comes only with long years of practice. The most successful designer is the one with the greatest feeling for real problems, and the wit to know when to stop the paper studies running too far into the realms of fantasy. By fantasy we do not mean only fantastic shapes and their impracticable combinations: one of the most common fantasies is that of being too accurate. Ultimately, one must be impeccably accurate in aircraft design, for an error of relatively small order may lead to, for example, the untimely end of several hundred people in a large transport aeroplane. However, one should only be as accurate as necessary, and no more, at each design stage. An excess of accuracy in an estimate wastes time and leads to poor design.

The design of an aeroplane is dictated by the specification. Table 12-4 shows the simplest

relationships between aspects of the specification and the physical characteristics of the resulting aircraft. The items are arranged in the typical order in which they are determined. Each characteristic is shown to depend in turn upon a number of other factors.

Table 12-4 Influence of specification upon design

Specification	Main design characteristics
Speed (compressibility drag rise)	Low drag (D): wing sweep (Λ) and thickness ratio (t/c); body fineness; area distribution High thrust (F): choice of powerplant
Altitude and rate of climb	Low wing loading (W/S): wing area (S) and weight (W) at altitude Low thrust or power loading (W/F), (W/P): choice of powerplant
Airfield take-off run	Thrust loading (W/F): number of chosen powerplants; Lift: all-up weight (W_0) and wing area (S); wing section characteristics ($C_{L\max}$); high-lift devices ($\Delta C_{L\max}$); lifting engines and vectored thrust
Landing run	Lift/drag (L/D): wing loading (W/S) high lift and drag devices ($\Delta C_L/\Delta_{CD}$); lifting engines, vectored and reverse thrust Landing gear: undercarriage layout and brake system (mechanical and aerodynamic)
Range	High propulsive aerodynamic and structural efficiency: fuel weight (W_F); cruising speed and altitude; take-off weight (W_0); wing area (S) and thrust (F); optimum lift/drag $(L/D)_R$; aspect ratio (A); weight of fuel (W_F)
Direct operating cost	Take-off weight (W_0); wing area (S); thrust (F); payload weight (W_F); range (R); cruising speed (M) or (V); weight of fuel (W_F)
Optimum aeroplane	Balance of: direct operating cost; aspect ratio; combination of sweepback and wing thickness ratio

12.6 Technology and timescales

The time taken to design, build and fly an aeroplane of major importance increases year by year. Whereas a light aeroplane might take 1 or 2 years, a large bomber or transport can take 10 years or more. Aeroplanes that take a long time to design usually involve a number of important preliminary steps forward into regions of little knowledge.

Every advance in aeronautics is the result of long and painstaking research. More often than not the development of a particular kind of aeroplane cannot take place because the time is not yet ripe, and revolutionary ideas must be laid aside until the materials and techniques, i.e. the technology, have caught up. Jet propulsion and rocketry are cases in point. The invention of the practical aeroplane itself had to wait for centuries as little more than a dream until the technology was advanced enough for the light petrol engine to be made.

Basically there are three prerequisites to be met before an aeroplane can be built with much hope of success:

(a) The principles must be right.
(b) The materials must be available, and for this it may be necessary to develop new ones.
(c) It must be possible to build the aeroplane within the required tolerances.

For the first, research and development is usually necessary to prove the practicability of notions and to provide a basis of experience. It is always wise to pay heed to the ideas of other people in the field and there is no shame in judicious copying. Most successful aircraft built by all nations are copied to a certain extent, or derived from the ideas of others.

Of the new materials that have appeared since World War II, titanium is one of the best known, although it is not necessarily the most important. It has been used to replace stainless steels where heat and corrosion-resistant properties are needed. Newer materials still must constantly be invented to cope with kinetic-heating problems. At M = 4 a stagnation temperature is reached where aluminium melts (although it is already weakening around M = 2.2), at M = 6 steel melts, at M = 7 titanium melts, while at M = 10 a diamond melts. At such high temperatures special structural techniques are needed to meet the problems of softening and failure.

Manufacturing tolerances involve skills, plant and quality control. Not only must one have machinery, one must also have properly trained personnel and thorough inspectors. Technology, which is the science of the industrial arts, must be well developed in any country aspiring to build and operate high-performance

aeroplanes.

12.6.1 The timescale - how long it takes

The time taken to design, build and fly an aeroplane is shown as a number of separate stages in Fig. 12.8 as a typical development program. Very often it will be necessary to develop an engine simultaneously, along with the installation in the airframe, and a close liaison is maintained between the engine and the airframe manufacturer at all times. It is true to say that where such liaison is poor an aeroplane will probably be a failure.

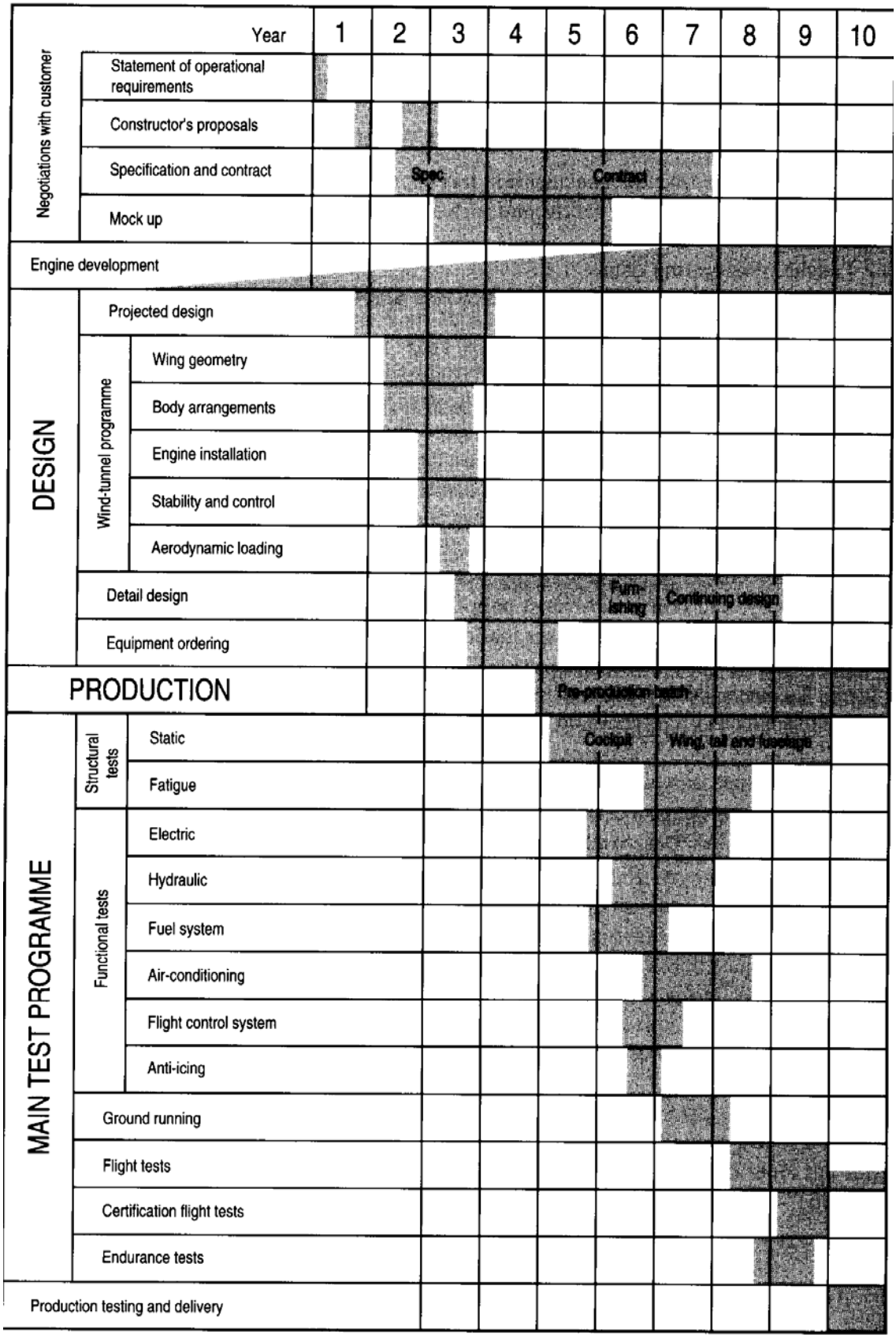

Fig. 12.8 Typical development program.

The time taken to bring a large turbojet (around 15,000 lb thrust) into production may be anything from 5 to 7 years, with costs exceeding £20m. The time scale can be expected to lengthen. In the past, with few exceptions, civil engines have been developed from military engines. Many large military aircraft programs in the developed world were cut back with the advent of the ballistic missile and the space-race, with the result that the aircraft research and development burden is being thrust more heavily onto civil affairs. Because civil programs cannot obtain as much financial backing as military, we may expect the aircraft and engine time scales to lengthen still more, with much smaller steps. It is always dangerous to forecast though, and one can never be sure of the magnitude of benefits from 'spin-off', as the Americans call the generation of useful ideas and material that can be used beyond the limits of a particular narrow program.

Proving airworthiness

Before a Certificate of Airworthiness is given to an aeroplane a detailed assessment is carried out on paper. For the purpose of the assessment the constructor must prove the suitability of the aircraft by mathematical calculations, physical tests both on the ground and in the air, and by prolonged tests of endurance. The validity of the calculations depends upon the accuracy of the assumptions made in the early stages of the design, which depend in turn upon the care and intelligence with which the operational requirements were stated.

Ground testing is of great value and can be looked upon as the foundation of the work covered by the flight tests. The flight tests have as their main objectives:
(a) Demonstrating that the specification has been met.
(b) Proving that the design safety and airworthiness requirements have been complied with.
(c) Providing operating data.
(d) Establishing the reliability of the aeroplane and its equipment.
(e) Checking maintainability.

The endurance testing proves (d) and (e), by forcing the machine to work hard over the widest range of operating conditions that it is possible to achieve.

Proving airworthiness is the final step in a development program, all that remains is the formal production flight-testing of an aeroplane before it is handed over to the operator. The whole program - from the first tentative notions of the man who wants an aeroplane to the final delivery by the manufacturer - is a long, hard, painstaking process. There are no short cuts and, very often, there is no prepared highway. There is a lot of backbreaking work, sometimes great bitterness in the learning from inevitable mistakes, but there are also moments of great joy, and that is why most people who stay in aeronautics do so for love of it.

In learning to use the air, man has made one of the greatest of all leaps forward, and onward into space. The aeroplane, in every form, has many possibilities for benefiting mankind for as far ahead as we can see into the future. However, these possibilities cannot be realized without true understanding of both the potentialities and the limitations of such machines, for in aeronautics there can never be one without the other. It is in the discovery of both that the greatest aesthetic satisfaction is realized.

In the appendices the potential and limitations, including obstacles in some cases, of some aircraft are highlighted, perhaps showing them to be not such bright ideas as some at first thought.

APPENDICES

The appendices which follow incorporate a mixture of old and new material, on the principle that there is nothing new under the Sun. It is valuable to follow the thinking of aircraft designers and aeronautical engineers as they grappled with problems which were physically similar to those of today, and will be the same in the future. All that changes is the orientation and the technology. There is no longer confrontation between the USSR and the USA, NATO and the Warsaw Pact nations, but there are other confrontations looming, responses to changing markets and new operational requirements, both military and civil.

For example, the author was posted in the late 1960s to the Operational Requirements Branch of the Ministry of Defence (Air), in a small cell looking forward to the wars we might then have had to prepare for in the mid to late 1980s. In the late 1990s the technical solutions he then thought practical, relevant and obvious are now barely recognizable as such; they have been overtaken by events.

These examples which follow are from a variety of sources which show the first raw thoughts about aircraft shapes for practical applications and solutions to a problem. Their history is irrelevant. Their purpose is meat for technical criticism, and to give students of aeronautics ideas upon which to bite and gain confidence. Aircraft can be beautiful, but it is not always true that if they look good they are good. One must look at them with as critical an eye as one would use when buying a horse. Some of these aircraft were in response to past military and civil market requirements; some were projects which featured as design studies in universities; others are projects arising from the author’s work as an aero-marine consultant.

Both military and civil projects are now so costly that nations which were once highly competitive are forced into multinational groups and conglomerates, simply to remain relevant internationally. Old alliances

change, recent associations wither, but the physical lessons to be learned remain the same. Our advantage is that we can now point back to where a line of attack on a problem altered the direction and with it the solution. With the benefit of history, we can pretend that we would have been wiser, or have done better. However, that is the conceit which comes from the hindsight that we would not have had if our forebears had done nothing for us to look back upon.

Note: in the appendices units remain in FPSR, as in the first edition. This is because there is still a huge international market which continues to use them; and to shorten the task of producing the present edition. To ease conversion of British or American units to Metric/SI, tables are included early in the book. Of these the conversions in Units, Table 4 are the most relevant to what follows.

Appendix A

Light, Small, Regional/Commuter and Business Aeroplanes

The aeroplanes discussed in this appendix are essentially ‘people carriers’ of one sort or another. They can be classified roughly as follows, without going into the formal detail involved in certification:

(1) *Light aeroplanes* weigh less than about 6,000 lb (2,730kg). They are used mainly by private owners and flying clubs. Whether singles or twins they are in general piston— propeller-driven. At present the turboprop and turbojet are too expensive for the purpose, but, having said that, the jet and turboprop-engined aeroplane cannot be excluded. Already there are signs of a technological breakthrough bringing such engines within cost—beneficial reach of the non-corporate owner.

One of the strongest arguments in favor of developing turbine engines for this class of aircraft is their reliability. Failure rates are much lower than those of piston— propeller engines. They are not only powerful, but weigh less for their power output. The consequence will be that more people can be carried for a given structure weight, with a more lively level of performance. Kerosene fuels are cheaper to manufacture. One engine may be used in place of two. Increasingly, it is hard to differentiate between light aircraft for pleasure, or training, and those used for business.

The fleet of light aeroplanes throughout the world is larger than any other. During the 20 years in which the author was the test pilot for light aircraft in the UK Civil Aviation Authority, they amounted to around four-fifths of the total on the British Civil Register.

Light aeroplane stall speeds in knots are limited to the equivalent motorway speed of 70mph (which gives occupants a fair chance of survival in an accident). In the UK this was interpreted for a long time as 60 knots, and in the USA as 61 knots, which allowed an increase in weight or disposable load of 34%. The American value is now accepted.

(2) *Small aeroplanes* are those which do not have more than 9 passenger seats and are limited to a maximum take-off weight (MTOW) of 12,500 lb (5,700kg), which is the limit for single-pilot operation. It is argued that an aircraft with 9 passenger seats is into serious public transport operations, and must be certificated as such.

To be certificated, propeller-driven aeroplanes with more than 9 passenger seats, even though the MTOW does not exceed 12,500 lb, must have more than one engine and be treated as being in the commuter category.

Note: beyond 12,500 lb an aeroplane is rated as large, unless it is in the commuter category. *Big transport aeroplanes* weigh more than 30,000 lb (13,620kg).

(3) *Regional/commuter category and business aeroplanes* represent a broad mixture.

The *regional transport* is a relatively new classification, although the use of aeroplanes for the task is not new. In different forms they began to emerge at the end of World War II. Indeed, one might almost say World War I, if single-engined De Havilland DH4 and Bristol F2B aeroplanes, which were modified to incorporate primitive cabin accommodation for 2 or 3 fare-paying passengers on short internal and European routes, are taken into account. Now, regional capacity varies from as little as 19 to 120 or more passengers.

As a class it has been represented most by the smaller turboprops, used to link regional centers of population along routes which, radiating like spokes of a wheel from a central hub, serve passengers with the frequency of buses. The length of route could be as short as a hop from one island to the next, in Orkney or Shetland, to around 250nm (400km).

A change is taking place in that the regional market, which relied upon the adaptable turboprop, is increasingly challenged by a new assortment of turbofan-engined aeroplanes, with increased capacity, range and cruising speed. Where turboprop and turbofan types overlap there is considerable blurring. As fan engines become more fuel-efficient the aircraft can be used on shorter routes, where their novelty makes them popular with passengers. Turboprop aeroplanes, on the other hand, are most useful workhorses, which continue to grow larger and faster, slowing the rate at which they are overtaken by their competitors. Whether turbo-props will be totally replaced by fan-engined regional aeroplanes is uncertain; on what are called 'thin’ routes into remote and more sparsely populated regions, their short-field performance with propellers and their

adaptability gives them a useful edge.

By definition the *commuter* is a piston or turbo-propeller-driven multi-engined aeroplane weighing 19,000 lb (8,600kg) or less, having not more than 19 passenger seats. Propeller-driven aeroplanes with no more than nine seats must, if their MTOW exceeds 12,500 lb (2,730 kg), also be certificated as commuters. The significance of this is that their certification requirements are comparable with those of big transport aeroplanes.

Business aircraft are either jet or turboprop and carry fewer passengers. The idea is that the busy company executive is able to travel in the same luxury, and with the same efficient spread of office furnishing and equipment, as he or she has in company headquarters. Seating is deeply upholstered in quality leather. There is frequently special provision for lighting, air-conditioning, video and personal computing, a secretary, refreshments and a compact-disc player. Seating and tables facilitate in-flight conferences. If the aircraft is large enough there is likely to be sleeping accommodation.

Whereas the wing loading of transport aircraft is determined by the airfield length, the wing loading of a light aeroplane is usually determined by a landing speed requirement so that it does not exceed 61 k. Aircraft used for aerobatics are heavier than those used for touring. The higher structure weight of the aerobatic machine, that results from the higher load factors (see Table 4-2), can sometimes be reduced by designing a biplane, although the additional drag of a biplane makes it inferior to the monoplane when cruising. Biplane wings are shorter in span than those of a comparable monoplane, and the struts and bracing increase the equivalent depth of the wing structure, making it lighter overall, and enabling thinner and lower drag sections to be employed.

(picture)
Plate A-1 An operational requirement which takes account of the state-of-the-art. The Bede BD-10 high-performance, two-seat, personal jet kit-built aircraft, designed to reach M = 1.4 and 45,000ft. Homebuilt aircraft, with such vast potential, constructed and flown by amateurs, are a headache for regulating authorities. (Courtesy of Bede Jet Corporation.)

A.1 Two-seat light jet aeroplane

The design study was made by the author in 1954, to the specification of a farmer who wanted a small jet aeroplane for touring and aerobatics that did not need complicated airfield facilities. The engine available at the time had a static thrust of 330 lb and ran on petrol, paraffin or diesel oil. This made it an attractive proposition for a man having stocks of all three at hand.

A.1.1 Specification

The aeroplane was to carry a pilot and passenger with at least 50 lb baggage, yet it had to be capable of being flown solo without ballast. The latter point is important, because the passenger was half the payload and a large proportion of the total weight of a small aeroplane. Examination of Eqn (12-7) shows that the passenger must sit close to the centre of gravity if one is to avoid a large change of **CG** position when flying solo.

It was intended that the machine should operate from small grass fields, and the range should be about 500nm in still air. Good, safe stalling characteristics were required, and the aircraft had to be at least semi-aerobatic.

The equipment included provision for VHF radio, a dinghy and life-jackets, provision for oxygen, and fire extinguishers. An electrical system was required for engine starting without recourse to an external battery.

The aircraft had to be robust and capable of being kept in the open for long periods. Major components had to be capable of being replaced without special tools. The power unit had to be easily reached, and changed, without dismantling major structural components. Maintenance and servicing had to be within the capacity of an intelligent amateur. All systems had to be accessible, easy to inspect and to service. The structure had to be strong enough to sustain a wheels-up landing without excessive damage.

The aircraft had to be attractive to the eye and possess ‘feminine-appeal’ (which is the way of saying that a woman should not mind being seen with it, a point not quite as frivolous as might at first be thought). To this end it was required that a woman flying in the aircraft should be able to wear any of the clothes she might wear in a superior make of car.

A.1.2 Layout

The aircraft is shown in Fig. A.1.

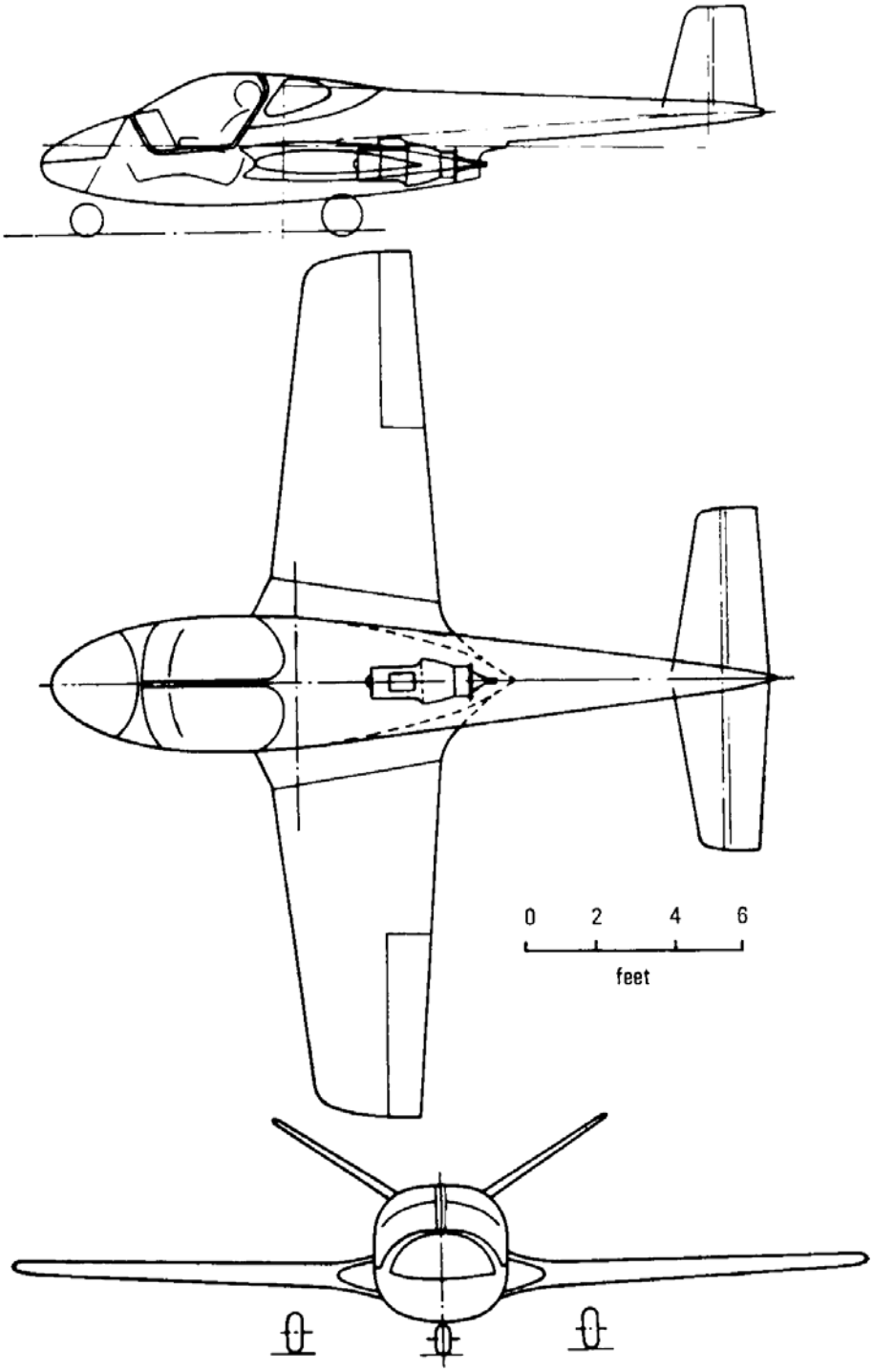

Fig. A.1 Layout of two-seat touring aircraft (1954).

Use of a jet engine allowed a short undercarriage to be used, and this kept the cockpit sill close to the ground, a point in favor of design for a feminine passenger, who would not normally want to clamber up steps or over wing roots while wearing a dress. The need for short ducting, to keep losses to a minimum, suggested a fuselage formed as a pod and boom. The engine was placed in the bottom of the pod, below the boom, so that the strong centre-section structure of the wing would provide resistance to the engine moving forwards in the event of a crash landing.

The wing was set low to provide a strong bottom structure, and to prevent the aeroplane rolling over too far if it slewed during a wheels-up landing. A low wing also kept undercarriage weight low, because shorter units could be used.

Originally a single fin and rudder was combined with tailplane and elevators. The position of the fin was an initial argument against mounting the engine above the boom, because of the hot jet efflux playing on the surfaces. When the size of the aeroplane had been determined, and a drag estimate made, it was decided to resort to a vee, or butterfly tail, because of the theoretically lower drag of such a unit. The dihedral effect of the butterfly tail affected the amount of dihedral used on the wing.

The need for robustness suggested a metal structure and skin. The need for very low weight meant that the skin would perhaps require stabilizing with PVC foam in places. Control surfaces were metal. A fully enclosed cockpit was used, formed by complete glazed panels that opened as a pair of petals. This gave

plenty of access to the cockpit, but necessitated a strong and rather heavy crash arch and door frame structure. The arch was joined at front and rear to a stiff box keel housing the nosewheel unit and control runs.

Low-speed operation demanded flaps and, possibly, drooped ailerons. A two-spar wing with torsion box was chosen for the structure. Flaps, ailerons and 'ruddervators' were designed to incorporate the minimum number of ribs. Stiffness of the surfaces was provided by 'dished' corrugations, running chordwise in each skin. Ailerons and ruddervators were identical in planform so that a common skin could be used for all.

All panels, such as engine cowlings, had to be stiff and stand up to rough handling when removed. Fastening had to be simple, a special fastener was chosen that could be opened either with a screwdriver or a coin. Picketing points and a simple mechanical brake system were designed to allow the aeroplane to be parked outside in all weathers. Control locks could be carried in the baggage space behind the seats.

It was found that a semi-aerobatic aeroplane might be built weighing around 1,600 lb when fully loaded, whereas a fully aerobatic version would have weighed more than 1,800 lb. To achieve these weights the fuel load had to be limited and, therefore, range was restricted for an aerobatic sortie. The fully aerobatic version would have had too high a structure weight, inferior climb performance and much reduced range.

The first layout of the aeroplane was too small and, without the passenger, the **CG** moved too far aft. The second version had the heavy-duty battery moved to the nose, so as to bring the **CG** further forward, reducing the distance between the **CG** of the passenger and the **CG** of the aircraft. A longer nose was needed to accommodate the battery beyond the feet of the pilot and passenger.

In order to operate from soft grass fields larger tyres and wheels were needed than for operation from hard pavements. This increased the undercarriage weight and reduced the volume available for fuel within the wings. The fuel was therefore accommodated in a large tank in the fuselage above the centre-section. This necessitated the design of a large firewall bulkhead between tank and engine bay and cockpit.

The arrangement of the fuel tank in the fuselage above the centre-section kept the fuel more or less on the centre of gravity, limiting the change of longitudinal trim as fuel was burnt. In order to keep the structure weight as low as possible, pilot and passenger were seated side by side. This reduced the fuselage length, while the flying controls were simplified by the pilot alone having rudder pedals. The stick was Y-shaped and mounted between the occupants. Figure A.2 shows the major components of the final aeroplane, it should be compared with Fig. 11.13.

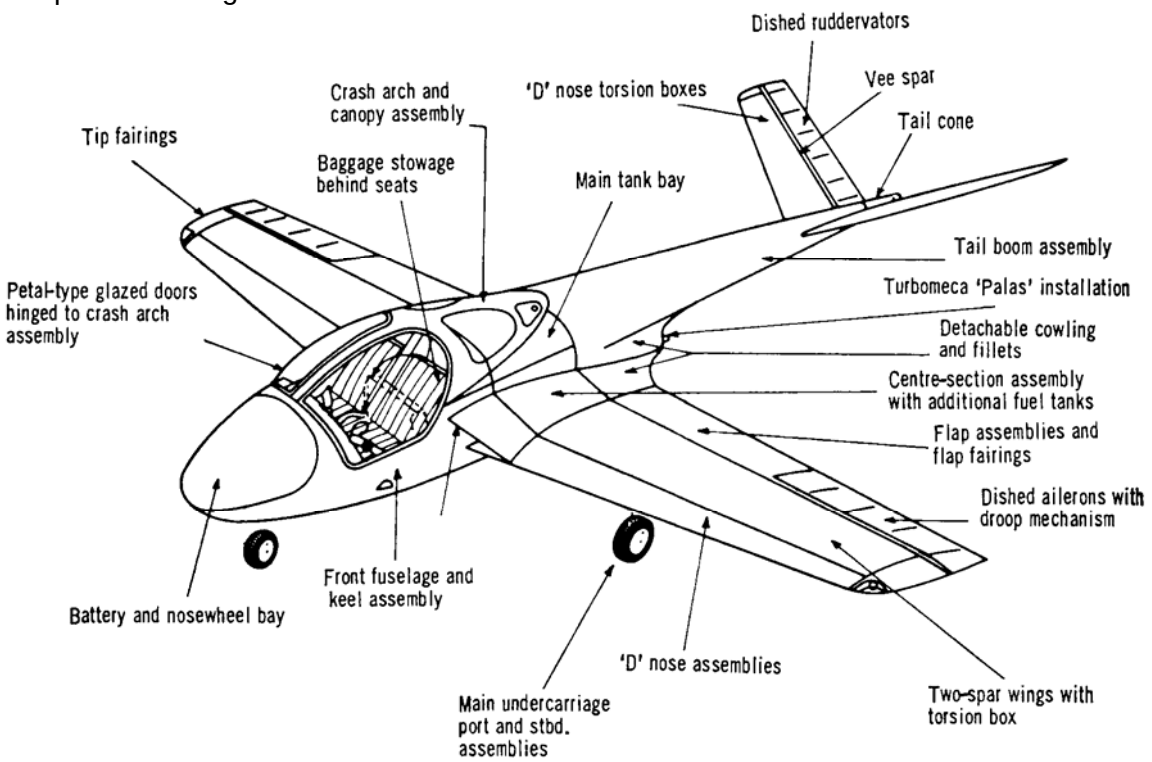

Fig. A.2 Components of touring aircraft (compare with Fig. 11.13).

A.1.3 Disadvantages of the aircraft

The aircraft was very heavy, although weight could probably be saved now by using some of the new materials and constructional techniques. For example, the 30 swg aluminium skin stabilized by 0.25in PVC foam plastic, mentioned in Section 11.5, could be used to advantage. The heavy weight limited the range of the aeroplane.

The short undercarriage meant that the bottom of the fuselage was only 1 ft from the ground, which might have led to damage during a forced landing on a rough surface. Ground clearance was also about 1 ft with flaps fully down, and this made them susceptible to damage.

No mass production was envisaged, so that a single aeroplane would have been very expensive. The blown two-piece canopy would have suffered much wear and tear and would have been costly to replace.

On the whole the sort of light jet aeroplane that emerged appeared to be totally unsuited to the limited amenities of the operational environment. A much better piston-engined aeroplane could have been designed. The moral is plain: an operational requirement must always take some account of the state-of-the-art at the time, otherwise time will be lost and money wasted. The design study was, in fact, a feasibility study and as such it would normally have been carried out before the OR was formulated.

A.2 Minimum-size business aircraft

The tandem-wing, or K-wing, aeroplane shown in Fig. A.3 was a study made by the author in 1961 to investigate the possibility of producing a minimum cost 5 to 6-seat business aeroplane. High single-engine safety is a necessity in a multi-engined aircraft, and the arguments led to a configuration with engines at nose and tail, which eliminated asymmetric problems for the pilot. Cutting the wing in half and then placing the halves (after suitable reshaping) fore and aft of the **CG** provided working lift and longitudinal stability without the cost of a tail unit. There was little or no engine failure problem and fin and rudder sizes could be kept to a minimum. The tail moment arm was short, although the tail volume was large, and fuselage length and structure weight were less than for an equivalent tailed aeroplane. The rear plane was mounted high on the fuselage and the foreplane low, with the intention of keeping interference to a minimum.

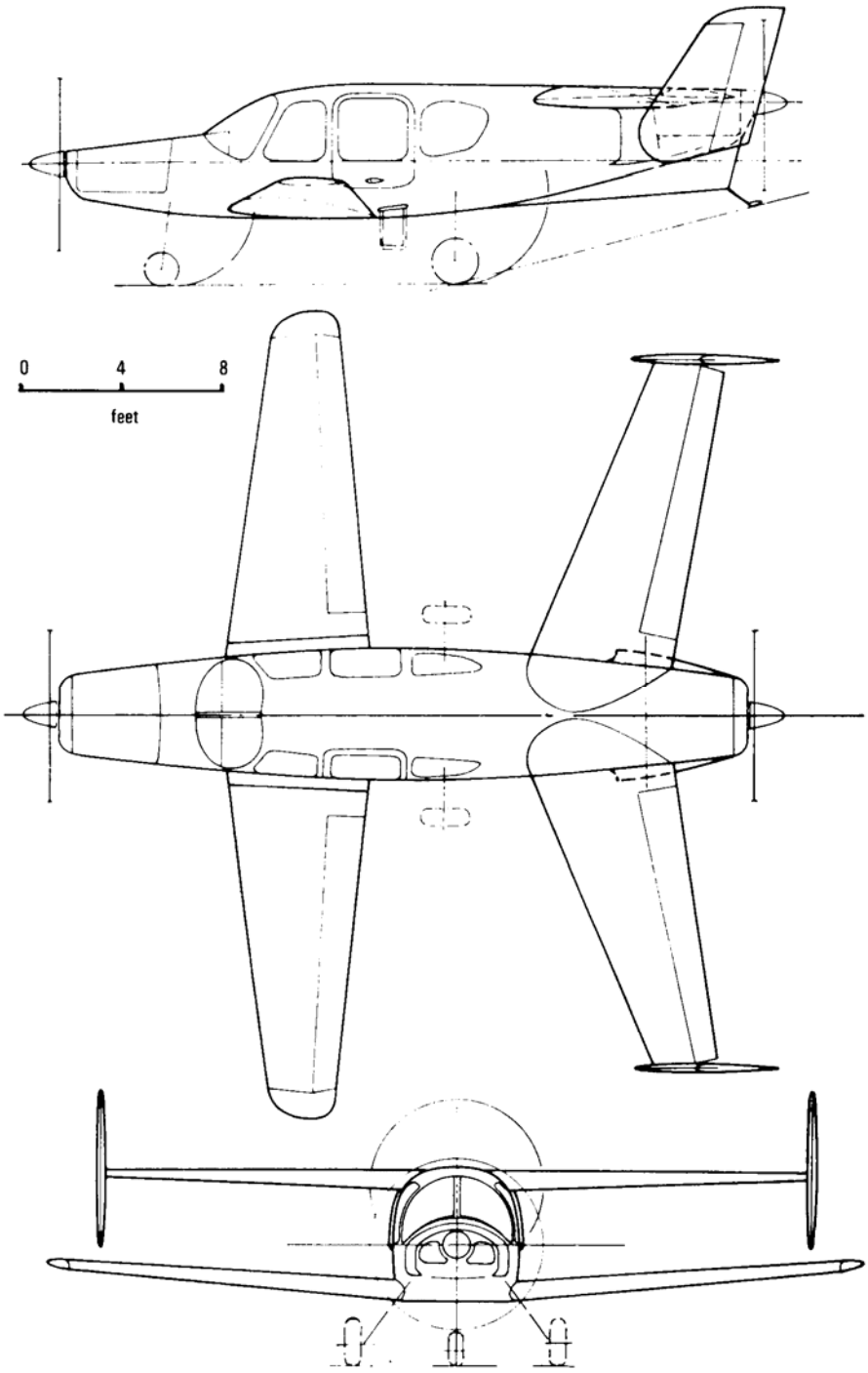

Fig. A.3 Layout of 5 to 6-seat business aircraft (1961).

An ultra-light experimental aeroplane was planned to investigate the layout. Powered by a rear-mounted engine, and with the pilot lying prone above the foreplane, it would have had a span and length of around l8ft, compared with the 32ft and 29ft of the larger machine.

Model tests indicated an interesting longitudinal instability that may have been caused by the horseshoe vortex system of the foreplane. With the **CG** well aft and the foreplane carrying slightly more of the weight than the rear plane, the aircraft would exhibit a very fast short-period oscillation, looking as if neither wing could make up its mind which was intended to do most of the work. Moving the **CG** forward increased the wing loading of the foreplane, decreased that of the rear plane, and lengthened the period of the oscillation. The forward **CG** increased the stalling speed considerably. Moving the **CG** aft lengthened the period of oscillation, but made the aeroplane directionally unstable.

Structurally the layouts looked attractive. It was intended to use common wing panels fore and aft in order to keep down production costs. The comparatively small overall dimensions of the aircraft helped to cut first cost and might have helped to reduce hangar rent. The designs were shelved as a result of the dynamic longitudinal instability.

Results of this kind should never be taken as conclusive, they merely point to the nature of a problem that is likely to be encountered with any departure from convention. Comparatively small alterations to the arrangement of the aerofoil surfaces could well produce satisfactory characteristics. Reducing the foreplane and increasing the size of the rear plane, while perhaps being forced to use different wing sections, front and rear, would have produced a machine rather like the Rutan Defiant. Such an alteration would have improved the view over the foreplane for the pilot. In the form shown the pilot would be fairly blind in a turn, an undesirable quality unless counterbalanced by a better one elsewhere.

(picture)
Plate A-2 Rutan Model 40 Defiant, more canard than tandem-wing. A long-range push—pull twin aeroplane. It has no rudders on the fin-like winglets at the (main) rear-plane tips. A ventral rudder, adjacent to the nosewheel unit, is ahead of the **CG**.

An equivalent twin-engined monoplane could have had a span and length around 40 ft and 35 ft, respectively, and a higher wing loading. Calculations indicated that the landing speed of the K-wing would have been about 15% lower than the monoplane.

A.2.1 Handling disadvantages

The comments which follow are the result of the author’s test-flying experience with a number of different near-tandem and canard aeroplanes.

As we have seen, tandem-winged and canard aeroplanes have their **CGs** further aft than those with a conventionally mounted wing leading the tail. The foreplane is destabilizing with respect to the tail. A **CG** well aft needs larger fin and rudder surfaces to provide the required fin volume. A canard leaves wake vortices and disturbed air, which sweeps close to or across the wing behind, and this can introduce unwanted effects in pitch, roll and yaw. In short, unless great care is taken with the configuration, there is more scope for failure than there is with a conventional wing-plus-tail arrangement. That is the reason why configurations with tails at the back have dominated aviation since Orville Wright wrote to his brother Wilbur in 1909, complaining of difficulty in handling their ‘rudder’-first aircraft, the forward surface of which was always in unstable equilibrium (he called their biplane elevator arrangement out in front of the main wing a rudder). From there on they put the ‘rudder’ behind the wing instead of before.

(picture)
Plate A-3 Avtek 400 all-composite small business aircraft and twin-engined canard pusher. Note large fin and rudder proportions, and relate this to Fig. 8.10. The engines are pylon-mounted above the rear plane, to gain propeller-clearance, tail-down; and for the thrust-line to lie close to the drag-axis and **CG**, making trim changes smaller with alterations of power.

Clearly, there are practical operational disadvantages with tandem-winged or canard configurations fitted with manual (conventional) flying controls. Those which are not designed for high performance and control by high-order FBW or FBL systems lack maneuverability and flexible flying qualities; they appear best suited for long-range cruising. For this reason Burt Rutan designed and built his record-breaking tail-first Voyager which, piloted by his brother Dick and Jeana Yeager, who also helped to build it, flew around the world non-stop in 1989. That aeroplane cruised on the rear engine alone, with the front engine shut down and its propeller feathered.

It is not easy to fit flaps in ways which provide conventionally consistent qualities in pitch, as when flaps and **CG** are relatively close together on a main wing. When the **CG** lies well aft of the foreplane and some

distance ahead of the main plane surfaces, it is not easy to trim the aircraft accurately (because the **CG** moves about as fuel is consumed, and with different loading arrangements). Control in pitch is sensitive. Moments due to tolerances in flap rigging can be magnified. The consequence of this is that tandem and tail-first light aeroplanes, like the Rutan Defiant, have no flaps. This lends simplicity, but it means that the pilot has then to make long flat approaches. Judging the point of touchdown is then less easy than when flying a conventional aeroplane with flaps.

Under such circumstances matters can be made worse in a multi-engined (push—pull) aeroplane. With the front engine failed and feathered the pilot can usually make a go-around by applying power and climbing away, to make another approach, because the rear engine produces more thrust than the front, for reasons explained earlier. However, with the rear engine failed, climb performance on the front engine alone may be inadequate for making an overshoot, because of loss of momentum in and extra drag of the propwash sliding past the airframe surfaces. It is wise to set the idling RPM of a rear-mounted engine slightly higher than those of the front engine, because when working in a sluggish wake the rear propeller is less able to continue windmilling and the engine can die (as it did on a test flight by the author). Without asymmetric forces to warn the pilot, and with attention concentrated outside the cockpit, one can be at a disadvantage when needing full power to haul the aeroplane out of trouble.

(picture)
Plate A-4 (a) Fairchild Dornier 328, typical of the breed of regional airliners which carry 30 passengers up to 1,000 nm. With turbofans or turbojets it is also in the business/corporate class of transport aeroplanes. Note the bulged fairing of the wing which enables a clean junction to be formed, clear of the pressure cabin. The main undercarriage is also within bulged fairings; and the aircraft has ventral tail strakes (compare with Fig. 6.20).
(b) Turbofan version of the Dornier 328 has slightly reduced range, but a higher cruising speed than the turboprop, with substantially the same payload.

A further difficulty can arise with fin surfaces which are, in effect, endplates at the main plane tips and which are often described as winglets. Tail-first aeroplanes have long forebodies which generate powerful destabilizing lateral cross-forces with yaw. If the rudder authority is too powerful, or if the angle of yaw is large enough for whatever reason, then tip-fins and winglets can suffer breakdown of airflow and stall, just as a wing will stall. In flight this led to a wild departure in at least one case; a winglet stalled, accompanied by the adjacent wing tip. The aeroplane rolled and yawed towards the stalled tip and pitched-up, because the foreplane was then lifting more than the main plane. The subsequent motion appeared to resemble a rolling tumble backwards, with the aircraft attempting to change ends, or so it was reported. Fortunately, the pilot managed to recover from the situation. The aeroplane was subsequently modified to reduce authority of the twin rudders. Through foresight the Rutan Defiant has no rudders aft of the **CG**, instead it has a forward-mounted rudder, beneath the nose, adjacent to the retractable nosewheel.

Directional control in a crosswind, on take-off and landing, can be more difficult with a tail-first aeroplane than it is with a conventional tail at the back.

A.2.2 Commercial disadvantages

The minimum-size business aeroplane used in this example would almost certainly have been useless, even if it flew correctly. The aim of making it short to reduce cost, by means of wing arrangement, militates against it. There would not be the space inside for comfortable seating, or even the most basic office necessities. When devised there was already a number of advanced, luxurious, personal and business aeroplanes on the scene, especially in the USA. The jet engine was in use and the turbofan, with low specific fuel consumption and the ability to bestow long range, was developing fast.

Such an aeroplane would have been of little use, except perhaps as an air-taxi. With push— pull piston engines it would have been noisy, because of interaction between the blades of the rear propeller and the mixture of wake velocities through which they passed with every revolution. Finally, it would not have had 'good' field performance, because of inability to trim on the approach with flaps front and rear. Different **CGs** would have led to different approach speeds and a variety of take-off and landing distances, for the same take-off and landing weights: a totally unsatisfactory situation, especially at night and in bad weather and when compounded by an emergency.

Appendix B

Utility and Freight Carrier Aeroplanes

Aircraft are versatile forms of transport, each increase in versatility being driven by a jump in technology. Among the most interesting roles are those in the remoter regions of the Developing World, an area inhabited

by around three-quarters of the world population. The main problems to be solved by use of aircraft are:

(a) The provision of a reliable transport system, as part of the infrastructure of the area.
(b) Diversifying the economy by conservation and use of natural resources.
(c) Increasing and diversifying agriculture, to feed the population better and earn extra income.
(d) Increasing employment and aiding the mobility of labor.

It follows, broadly. that two kinds of machine are needed. The first is the aircraft for aerial work: agriculture, forestry, survey, pest control, fire-fighting, and elements of construction and related industries. The second is the workhorse, or flying-mule: transports, freighters and the flying equivalent of the motorbus. Both kinds may include seaplanes, either floatplanes or flyingboats.

Choices lie between fixed and rotary-winged aircraft. Payload for payload and powerplant for powerplant, rotary-winged aircraft cost around 10 times as much as a truck, and 2.5 times that of a fixed-wing machine. However, the arrival on the scene of the lightweight and powerful turbine engine has caused these rough multipliers to be subject to considerable variation, by widening the possible spectrum, from piston—propeller at one end to turboprop at the other.

B.1 Single or twin?

The turboprop engine is an expensive jewel, with exceptional reliability and high power for its size. This enables a case to be made for employing a single engine, in place of two, for relatively heavily loaded small aeroplanes. The Royal Australian Flying Doctor Service, for example, is said to prefer single turboprop aircraft, because they are cheaper than twins to repair, maintain and replace. The catastrophic accident rate for turboprop-engined light and small aeroplanes is about half that for the same aircraft with piston engines: around 0.77×10^6 as against 1.58×10^6 per flight hour. The heavy ‘big-jet’ airliner is around 11 times safer.

There is pressure by Canada, followed by Australia, followed in turn by the USA, to use cheaper single-turboprop aeroplanes for roles previously carried out using multi-engines. In the UK and Europe, which suffer the vagaries of erratic bad weather systems as against more reliable changes of climate, single-engined aeroplanes are not (yet) certificated for public transport operations at night, or for instrument meteorological conditions (IMC), although cargo and freight operations are permitted. Should the single engine fail en route, it is required that the pilot must be able to make a safe landing with minimum visibility of 1 nm (1.6km) and a cloud base no closer to the surface than 1,000ft (305 m). These limits allow flight above a cloud layer, while giving a sporting chance of a safe forced landing in visual meteorological conditions (VMC) if the engine stops. Thus, the snag with the pro single-turbine engine argument is that although it makes for a simpler and cheaper aeroplane, it is still impossible to demonstrate equivalent twin-engined safety following engine failure in the same flight conditions as the twin.

That is not the end of the story, for in the UK and Europe we are faced with greater population densities and consequent third-party risks. Thus one may expect national, socio-geographic variations between states, and similar variations in certification philosophies. The subject is expected to remain a source of contention.

(picture)
Plate B-1 The Ayres Corporation LM 200 Loadmaster, shown in model form, is being developed for a multiplicity of work-horse roles. It will also be fitted with floats. Two Turboshaft engines totaling 2,400 SHP drive a single propeller through a common gearbox. Each engine has an independent drive-train. If one fails it disengages, with the propeller continuing to he driven by the remaining engine.

(picture)
Plate B-2 Canadair CL-215TP amphibian flyingboat, used widely for firebombing.

(picture)
Plate B-3 Cessna Caravan 1-208, single turboprop, ten-seat commuter floatplane amphibian.

B.2 Coupled or separate engines?

Asymmetry, when a wing-mounted engine fails, brings with it the possibility of mishandling. Burying multi-engines within a fuselage, a pod or a nacelle on the centerline of the aircraft solves the asymmetric problem, while the lift/drag ratio is much improved by cleaning-up the airframe.

The push—pull twin is one way of eliminating asymmetric problems, but it makes for a noisier aircraft. Another is to pair twin engines side-by-side with a common gearbox, driving a single propeller. With an arrangement of this kind there arises the question of mechanical reliability of a system, which depends primarily upon a single gearbox. Without protection, a failure of the gearbox then knocks out both engines.

An example of protection avoids dependence upon a common gearbox by having both engines, each

with its own gearbox, centrifugally clutched to an independent propeller shaft, either engine can then be shut down. The most successful and well-proven system using twin turboprops, although heavier, was employed for many years by the shipboard Fairey Gannet of the Royal Navy, built to the same specification as the Blackburn aeroplanes in Fig. 12.7. The Gannet had a double-Mamba engine installation in the nose (as was intended for the Blackburn aircraft). Each Mamba drove its own propeller, counter-rotating on concentric shafts. Either engine could be shut down and its propeller feathered, for long-endurance patrolling.

Even so, engines mounted separately but side by side, with intakes and rotating parts close together, are more sensitive to sympathetic aerodynamic and mechanical failures than when twin engines are well separated. Without a protective cage or shield, there is the risk of bits and pieces of a disintegrating engine rotor penetrating the casing of the adjacent unit. Disturbance of the airflow in the intake, by surge or failure of the engine, can so upset the flow into neighboring intakes that it causes sympathetic flame-out. Firing cannon mounted ahead of the engine intakes of a fighter has similarly caused flame-out, with gases from the muzzles of the guns making their contribution.

If the probability of losing one's single engine is once in a million per second, 1×10^{-6}/s, then the probability of losing two in a twin with separate engines is doubled, to 2×10^{-6}/s. However, with coupled engines the mutual risk of sympathetic failure can be increased much more by the mechanical complexity of their combination.

B.3 Utility and productivity

Utility cannot be measured successfully in economic terms alone. In essence it is a combination of versatility and productivity. In Chapter 3 we saw that:

Payload range = payload X distance, ton-miles (3-1)

If we now divide this equation by time we obtain:

Productivity = payload X true airspeed

$$P = W_P V, \text{ ton-miles per hour} \quad (3\text{-}1a)$$

The capacity of an aircraft to earn revenue on a given route can be measured in terms of fuel used, Q, such that

$$P/Q = (W_P/W_F)\, V \quad (3\text{-}1b)$$

which indicates the weight of payload carried per unit weight of fuel consumed. A parametric statement of this kind may be used to compare different aircraft for the same job.

On the other hand, if one needs more factors, then looking back to the Breguet range equation in Eqn (4-12), in which terms like R, c', (L/D) V, W_0 and W_F have appeared already, one might say that versatility, involving also productivity, might be expected to vary as W_P, W_0, L, D and c' at least, in an arrangement such as

$$\text{Variation in versatility} = V\left(\frac{W_P}{W_0}\right)\left(\frac{L}{D}\right)\left(\frac{1}{c'}\right) \quad (3\text{-}1c)$$

$$= \left(\frac{P}{W_0}\right)\left(\frac{L}{D}\right)\left(\frac{1}{c'}\right) \quad (3\text{-}1d)$$

Either way, the equation splits into three parts: (airframe), (aerodynamics), (propulsion), so that the effects of each upon the whole may be considered in isolation. A further split can be made by reverting to the original $P = W_P V$ part of the equation, by transferring the airspeed term across to the aerodynamics and using Mach number, M, if desired: V(L/D), or M(L/D). Both versions of this term appeared in the Breguet range equations, Eqns (4-11) and (4-12), and in Fig. (6.21), which showed shape trends for 'good' lift/drag ratios.

There is no universally accepted way of defining versatility numerically, it is for you to define. No-one can argue with you, because it is your choice for your purposes. Parametric methods, using whatever ratios are important to you in your comparison of types of aircraft available in the market, can be most usefully employed by adopting ratios of this kind. However, be careful, it helps to choose ratios which show superiority and improvement as they grow larger, and not the reverse. Thus, for long range one needs the ratio (lift/drag) to grow, all else being equal, and not (drag/lift). Similarly, high specific fuel consumption is penalizing. So, again thinking in terms of long range, use (1/c'), not (c'/1). In the same way, a heavy gross weight (W_0) is nearly always penalizing, in which case it belongs in the denominator more often than not, unless you want to show what benefit is being gained in terms of gross weight lifted out of a given airstrip by using 'that engine over there' instead of 'this one, here'.

High performance costs money, safety costs money, versatility costs money. Versatility involves variable geometry. Design for a wide (good) ratio of maximum to minimum speed, long range and endurance requires anything from a variable-pitch propeller and retractable undercarriage, to variable wing-sweep, by way of slots, slats, flaps, boundary-layer control, contra-props and rotary wings. It does not matter whether an

aircraft is financed internally or from outside a country, the question must always be: ‘what amount of variable geometry should (and can) be afforded?’

To achieve high utilization there are many advantages in using the minimum number of aircraft for the work. If one type can be designed for several roles, then so much the better. However, a careful choice must be made between versatility and the number of aircraft to be built. This depends upon expected useful life and upon the time in which an aircraft must pay for itself.

Versatility in type and distribution of payload has an important bearing upon ability to achieve high load factors. An aircraft should have an inboard profile that allows the maximum volume to be used all of the time. If there is such scope, then loading and supervision is less of a problem, although large **CG** margins will be needed for stability, and this must be balanced against the need for maneuverability. In this respect the aeroplane scores over the helicopter in terms of stability, but not in maneuverability.

B.4 ‘Flying-mule’ aircraft

The design study of the flying-mule aeroplane was made by the author in 1964, in an attempt to provide a highly versatile and thoroughly utilitarian machine for operations in South America, Africa and South-east Asia. The work to be carried out varied from crop spraying, pest control and spraying the desert with a fine oil emulsion (to hold the sand together while allowing seeds to grow) to air-freighting and the carriage of passengers. The aircraft had to be variable in configuration from one extreme of carrying tanks and spray equipment, to carrying a large panier for passengers or freight. In the latter configuration nose and tail loading was held to be essential.

The disposable load and stage length had to be fixed in order to gain some idea of the weight. Recent surveys suggested that developing countries were interested in stage lengths of anything from 50 to 1,100nm. Passenger needs were broadly similar everywhere, in that there seemed little occasion for more than a good busload of 48—50 people to travel at a time. Over the longer stages the numbers would be much smaller, around one-half to two-thirds, say 30—35 at the most. A cruising speed of 250k was thought to be ample for most stages, and only in South America might there have been a need for a specially pressurized cabin, for flight over the Andes. The disposable load and stage length were related as in Fig. B.1, and the passenger payload was equated to the amount of payload, in the form of liquids or powders, to be carried in the other configurations.

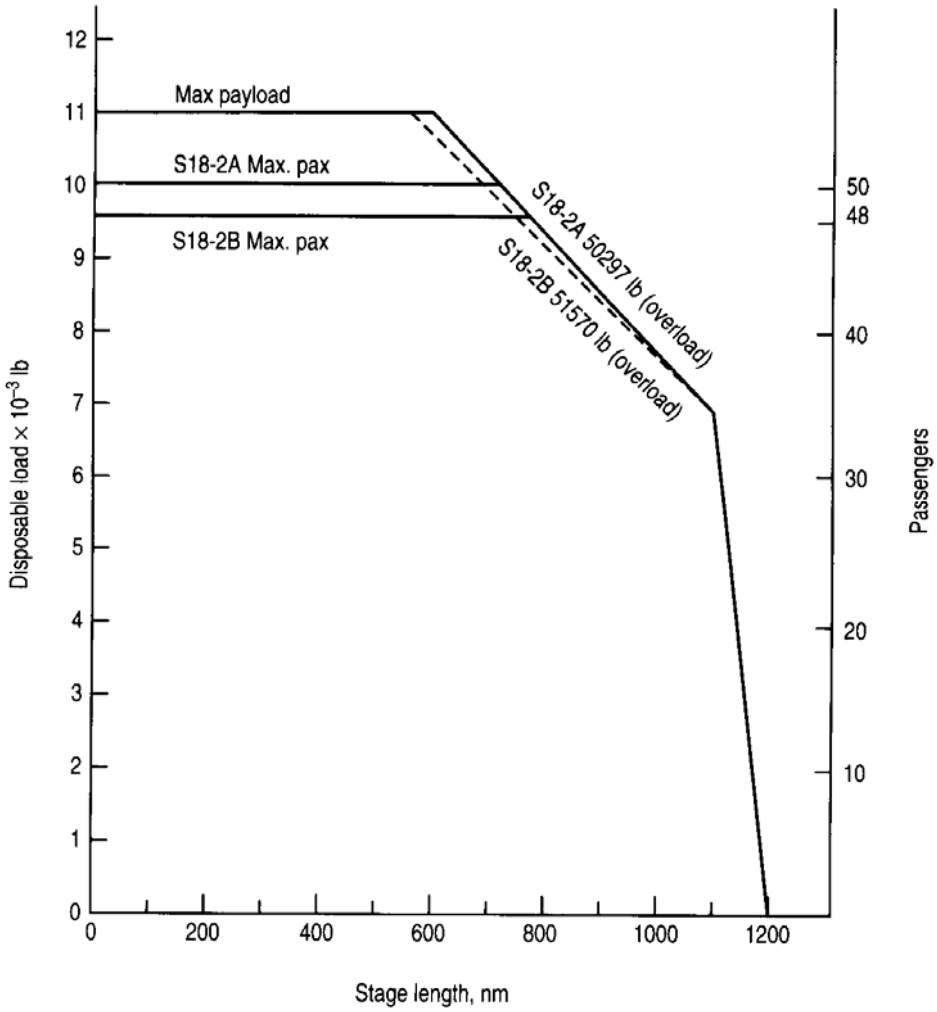

Fig. B.1 Disposable load and stage length.

With the broad requirement fixed it was thought that a turboprop aeroplane would probably satisfy most of the other requirements as well. A brief examination of the likely performance of an aeroplane carrying some 10,000 to 11,000 lb (5 short tons) of payload, and using two 3,245 ehp turboprop engines, showed that the decision was reasonable.

B.4.1 Layout

The aircraft is as shown in Fig. B.2.

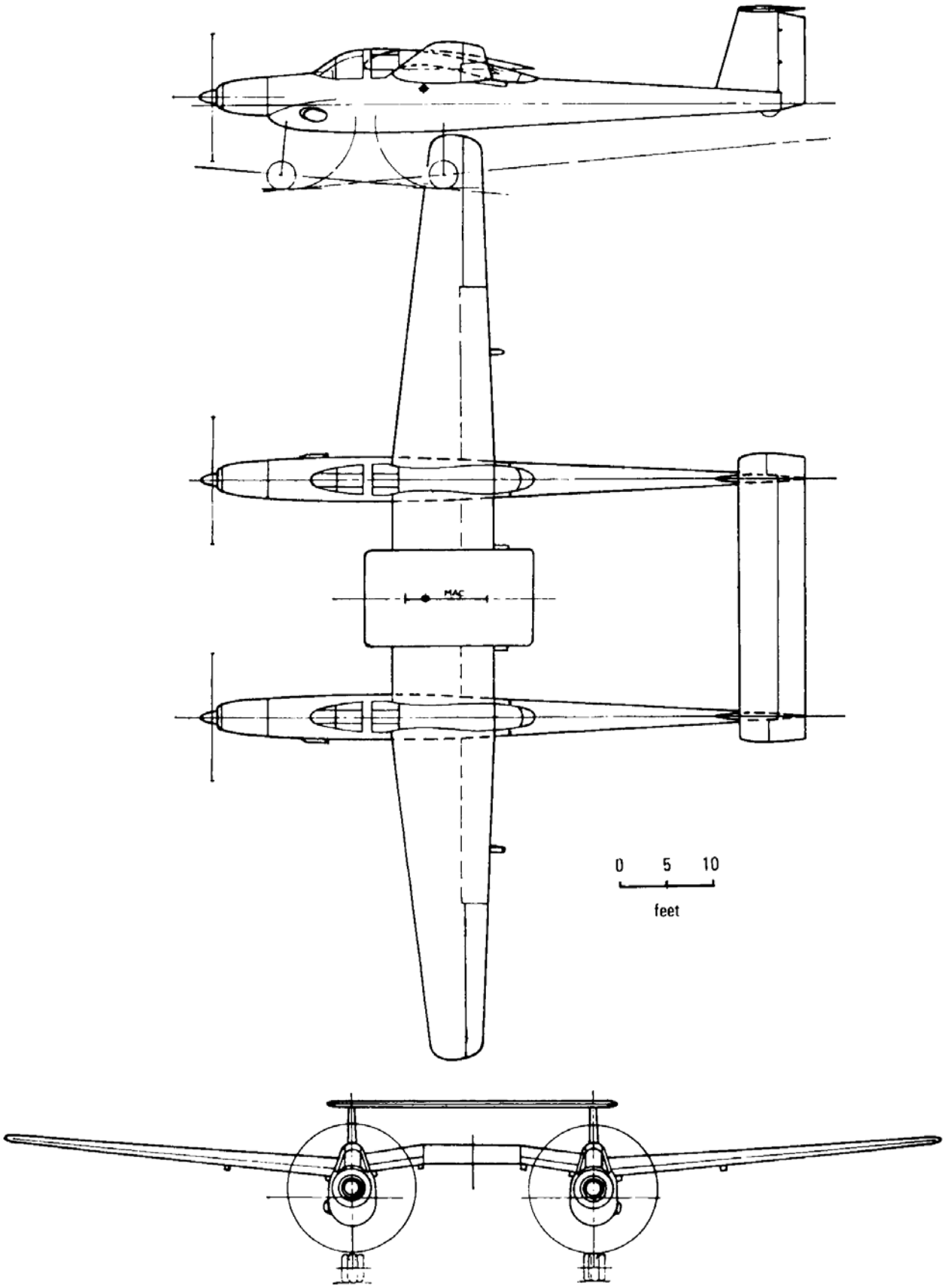

Fig. B.2 The parent flying-mule aeroplane.

Flexibility in the carriage of payload led to the choice of detachable pods, slung from the centre-section of the wing (Fig. B.3).

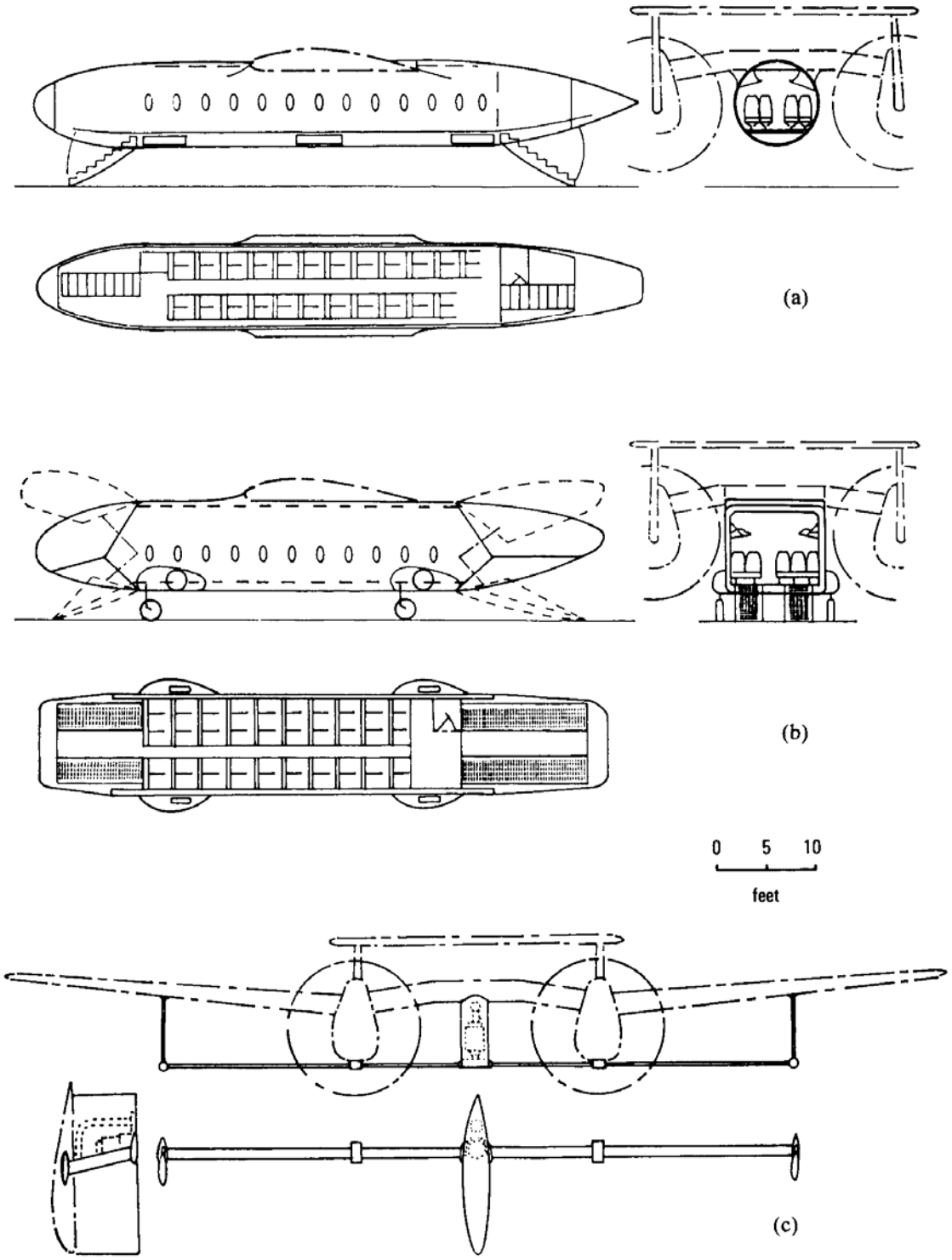

Fig. B.3 (a) The pressurized pod with high-density seating for 48; (b) freight pod with high-density seating for 50; (c) spray boom and 1,100 gallon tank, pressure replenishing.

Twin fuselages, or booms, were needed for flight without a pod, in order to locate the tail and undercarriage units. The parent aeroplane became, therefore, a form of aerial tractor. For most regions only the freight pod (with additional seating) or the tank and spray rig would be needed.

In a passenger aircraft seating should not really be more than four or five abreast between gangways. This enables the load to be spread compactly fore and aft of the centre of gravity, while maintaining the minimum number of knees for a distressed passenger to stumble over on the way to a toilet. The cabin must be high enough, ideally, for a man to stand erect. Taken together, both requirements fix the fuselage section, length, and cabin volume. For the lowest structure weight a pressure cabin is circular: 9 ft diameter externally will encompass a standing man and four abreast seating. The fineness ratio for reasonable aerodynamic characteristics is usually around 7 or 8/1, resulting in a fuselage about 70ft in length. Seats occupy about half the length and, with a high density seat pitch of 35 in, 48 passengers can be carried. Fortuitously this

corresponded with the busload measure and, at 200 lb for a passenger and baggage, worked out a little under 5 tons.

For agricultural operations and pest control the payload requirement varied from about 500 lb for small farm fields, to 10—15 tons of fertilizer for areas of South-east Asia. It was estimated that an aircraft carrying 5 tons of fertilizer at a block speed of 150k could spread more than 400 acres, about two-thirds of a square mile, in 9 hours at a distance of 150nm from the airfield, but much more at shorter ranges. It was held that an aircraft lifting such a load, and powered by two engines, would strike a reasonable balance between maneuverability and economy of effort for the pilot.

The twin-fuselage arrangement allowed an aircrew of four to be carried, with an additional ‘rumble seat’ at the aft end of each canopy fairing, for ground crew members.

Aiming for a field length of around 1,000yd to 50ft with fuel for 300 nm, meant a wing area of 1,000 ft^2, coupled with a power loading of 7—8 lb/hp. The resulting aeroplane had an aspect ratio of 10.5—11, a wing span of 105ft and a length of 68ft. High-lift flaps were fitted. The undercarriage had four units and six wheels (one front, two rear) and a load classification number of 11—15, depending upon weight.

B.4.2 Disadvantages of the aircraft

The principal disadvantage of the layout was the high structure weight. Generally speaking the penalty of carrying around an extra fuselage, no matter how slender, was a structure 25% as heavy again as it should have been. This increased the structure weight from 32 to 40% of the ‘ideal’ all-up weight. Part of the penalty came from the additional undercarriage unit.

The second disadvantage was the additional drag which reduced the range by one-third of the range of an equivalent conventional aircraft. In order to meet the range requirement the fuel load had to be increased for the freight and passenger aircraft, resulting in all-up weights between 50,000 and 52,000 lb.

Manufacturing and operating costs would have been higher than for an equivalent conventional aircraft setting the same standards in utility, but not as high as those of a luxury version. The ugliness of the aeroplane was the result of placing utility as a primary requirement. The utility depended upon variable geometry, and aircraft sales would clearly depend upon how much utility mattered to an operator, i.e. upon how much variable geometry he would be willing to afford.

B.5 Miles HDM 106 light transport

The Miles HDM 106 was the product of collaboration between the Miles brothers of Shoreham and Commandant Hurel of La Societe des Avions Hurel Dubois, of Villacoublay in France. The project, which belongs to the early 1950s, sought to combine the utilitarian qualities of the Aerovan aircraft of the 1940s and the very high aspect ratio wing designed by Hurel to produce a versatile and economical short-range transport.

A general arrangement drawing of the aeroplane is shown in Fig. B.4. The wing had an aspect ratio of 20, and the long struts were designed in such a way as to contribute to the overall lift/drag by a combination of camber and twist where they met the wing surface. The layout of the aircraft demonstrates the important properties of Eqns (4-8) and (4-8a), for the power loading was around 12—14 lb/hp, while the wing loading was 28.5 lb/ft^2 (higher than a light and executive aircraft in Table 12-3). The benefit on the side of the power loading (and, therefore, thrust loading) came from the high aspect ratio.

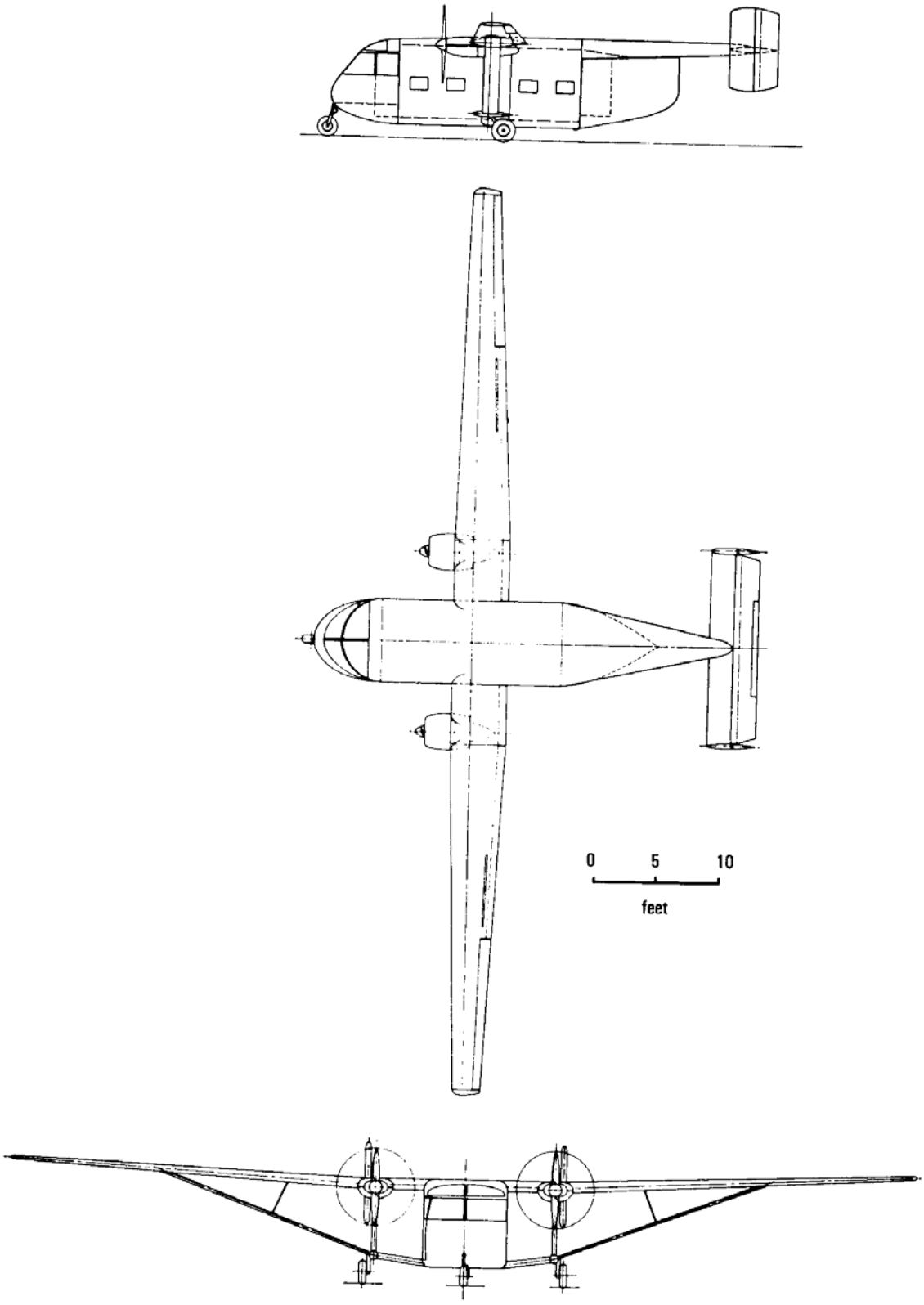

Fig. B.4 The Miles HDM 106 (France—UK, 1950s).

(picture)
Plate B-4 (a)—(c) The family of aircraft which grew from the seed of the HDM 106. The Short Skyvan (a) was a utilitarian transport with rear-loading. From the Skyvan was developed the SD3-30 (b) a feeder-liner and utility transport, also with rear-loading. The SD 360 (c) is a short-range commuter/regional and feeder airliner, with a longer but more streamlined fuselage which permits a lighter, single fin and rudder to be used.

B.5.1 Proof of concept

The HDM 106 was never developed beyond the project stage, but there were schemes for later variants. First was a military version, the HDM 107 Aerojeep, to fit a US Army specification for a STOL light-support aircraft, powered by two 800 shp Lycoming turboprops. Second was the HDM 108, planned as an enlarged HDM 106. Neither progressed beyond the drawing board. The original design of the HDM 106 was sold to Shorts of

Belfast, where it was developed as the Short Skyvan. This was a box-like high-winged twin turboprop, with a parallel chord wing, an aspect ratio around 11.0 instead of 20.0, and rear-loading.

The Skyvan differed markedly in detail if not in configuration from the HDM 106, which was designed for a gross weight of 9,500 lb (4,318 kg). The Skyvan fuselage was slab-sided, with sharp corners for maximum internal volume, causing it to be nick-named 'The Shed'. It was noisy for normal passenger operations, but was a successful STOL aeroplane which, with its rear-loading ramp, stood up to considerable rough handling in and out of unprepared airstrips. Although shorter in span than the HDM 106, it grew to a useful operational gross weight of 12,500 lb (2,730 kg), the limit for single-pilot operation in the public transport category.

The lineage extended from the ubiquitous Skyvan, of which around 150 were built, to the larger Short SD 330 and 360. Both are heavier and more refined regional transport aeroplanes with twin turboprops and relatively high aspect ratio, strut-braced, parallel-chord wings. The shaping of the wing—strut junctions makes an important contribution to the lift/drag ratio of their configuration, which is utilitarian proof of the efficacy of the original Miles-Hurel Dubois concept.

Appendix C Subsonic Transports

The world is changing very fast. Old, singular nations are joining with others in larger economic and political groupings that were unheard of when the aeroplane came on the scene at the turn of the 20th Century. Markets grow rapidly and people must move swiftly. Today it is no longer necessary to spend a night in Paris in order to do business there from an office in London, one can make the round trip by air (or rail) and still find time to work in a normal-length day. Communication is the lifeblood of social development, and aircraft are one of the most important links between people. The man-in-the-street is more than willing to fly, accepting what the specialist in aviation has to offer, but only if he is assured that travelling by air is cheap, safe, convenient and swift.

The word swift has been chosen with care. The block time of the whole journey is of far greater importance than the block time of flight. Most airfields are well away from the centers of the cities that they serve. The faster and noisier aircraft become, the further away they have to be moved from the cities. Cities grow too and there is an increasing hazard in aircraft, which have to make long, flat, approaches, spending much of the approach time over built-up areas. Transport aeroplanes are now being fitted with quietening 'hush-kits' to free them for round-the-clock operations into main airports.

As far as disturbance from noise is concerned, pilots already complain about the need to climb away steeply at comparatively low airspeeds, immediately after take-off, in order to reduce the noise levels around London and in New York. The pattern that emerges is one of airfields for the fast and noisy long-haul aircraft set well away from city boundaries, with slower and smaller feeder aircraft (including helicopters) linking the distant airports with the cities themselves.

Transport aircraft are either passenger-carriers or freighters. Long-range freighters and passenger aircraft are broadly similar and usually related, as many freighters are modified airliners. Short-range passenger-carriers, i.e. feeder aircraft and those used for internal services, are similar in layout. They are slower than the long-range machines, simply because short stages do not allow any economical advantage to be gained by flying at high speeds. The departure and arrival phases at each end of the flight dominate the block-time equation and do not leave enough time in the middle for fast cruising to show any useful advantage in cost-effectiveness.

In this appendix we shall look at two concepts: the economical short-range transport aeroplane, the 'Aerobus'; and the longer-range 'strategic' transport.

C.1 Short-range minimum-cost air transport (Aerobuses)

The philosophy behind the short-range, minimum-cost air transport is worth examination. It was the result of much work done by the Ministry of Aviation in the 1960s, in conjunction with the British air transport industry, on the original concept of a short-range, minimum-cost aircraft. The resulting design studies are felt to merit particular attention in a book of this kind. A second form, that of the much larger transport carrying some 250 passengers, or freight, is the result of further work carried out in Europe. In short, the Aerobus (not to be confused with the later Airbus) was almost literally a flying bus. It is believed that the idea was developed from a paper by S. B. Gates of the then RAE Farnborough, which advocated a spanwise distribution of the payload.

C.1.1 Initial Aerobus studies

As far as the initial studies were concerned it seemed clear at an early stage that the emphasis would be more towards the accommodation of the largest number of passengers for a given wing area and, therefore, given structure weight. There was little indication of the best aircraft for the task, and three studies were made for comparison:

(a) A swept-wing design of fairly large thickness-chord ratio with passengers distributed across a fair proportion of the wing span.
(b) A delta-wing design with increased root chord, decreased thickness-chord ratio, and passengers concentrated rather more towards the centerline.
(c) A conventional wing-plus-body aeroplane to serve as a basis against which the all-wing aircraft could be assessed.

The three aircraft are shown in Figs C1, C.2 and C.3, and it will be noted that their planforms have already been compared in Fig. 8.4. The design of the all-wing aircraft would have become very difficult below a certain size, because of headroom considerations, and it was agreed that the machines would be based upon seating for about 100 passengers, i.e. two average busloads in many parts of the world.

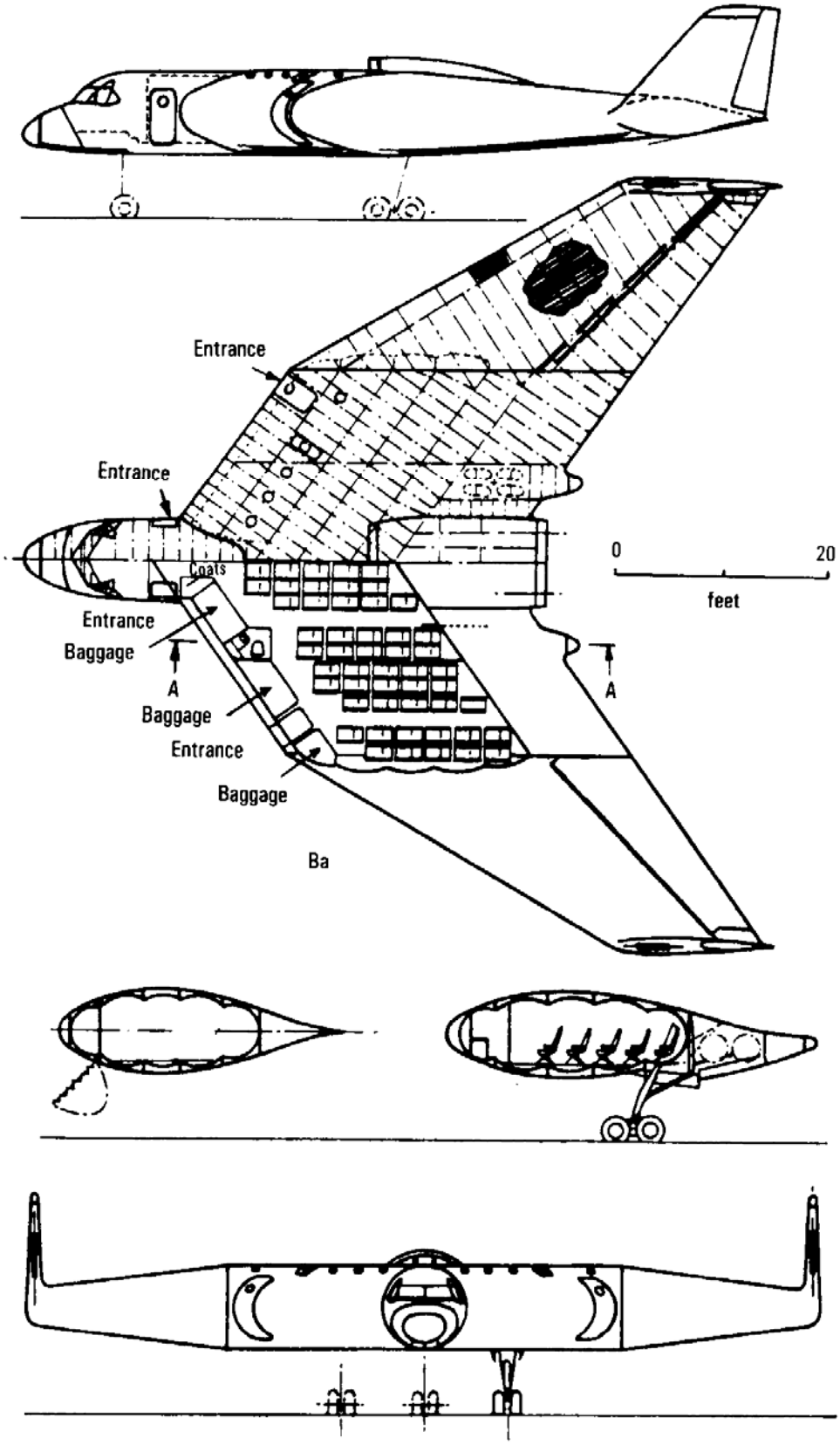

Fig. C.1 The 102-seat swept-wing design (Handley Page HP126).

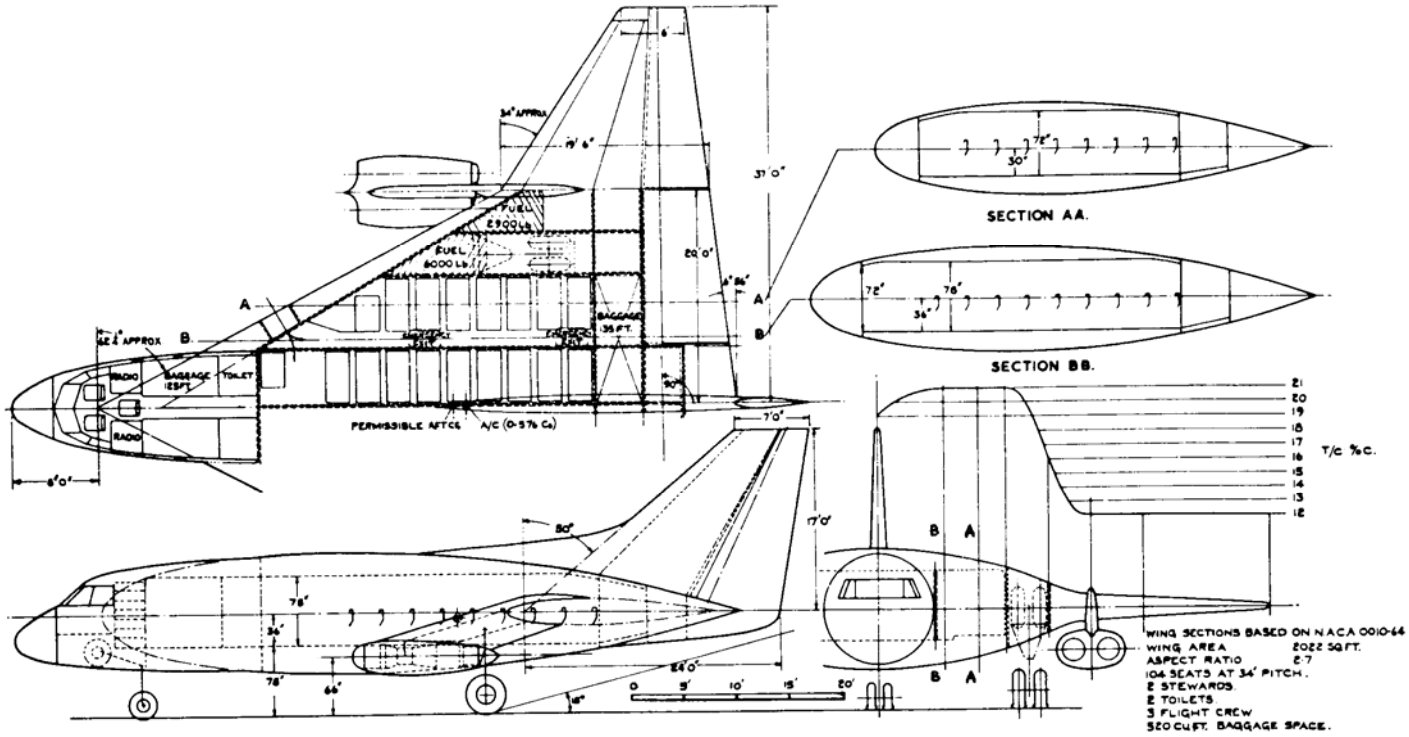

Fig. C.2 The 104-seat delta-wing design.

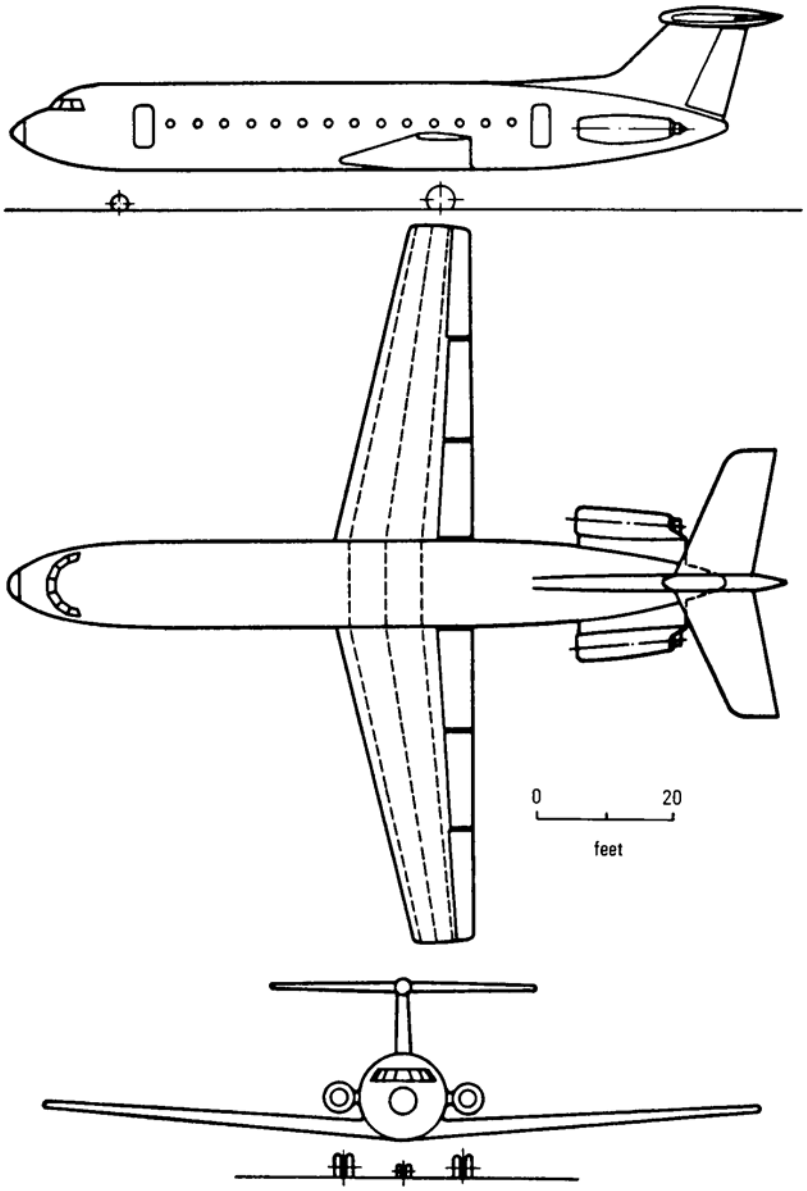

Fig. C.3 The 100-seat conventional wing-plus-body design.

The performance requirements included a range of 2 X 250 statute mile stages plus reserves, without refueling. The cruising speed was to be M = 0.7, the current speeds of M = 0.7 - 0.85 being rejected on the grounds that they were dictated largely by fashion and the need of airlines to compete with each other. A lower speed was not selected because it can be argued that a higher speed makes an aircraft more productive in capacity-ton-miles per hour for a given amount of capital investment.

The cruising speed, which worked out at around 500 miles per hour, generated the lowest cost on the 250 mile stage. This also corresponded with a block time of 50 min per stage (of which 13 min represented taxying, take-off, approach and landing), and a cruising height of 20,000 ft. Opinions on the choice of such a high speed varied, however, for it is possible to argue forcibly in favor of a slower turboprop aircraft for such short stages. It would seem that the key to the choice depends upon load factor. The turboprop aircraft is competitive with the jet if it can achieve the same load factors, but if passengers have a choice between a jet aeroplane and one with propellers, then all things being equal, they tend to choose the jet.

Properties of the layouts

It was found in the design of such large short-range transport aircraft that it was more important to achieve low structure weight and large cabin space than high aerodynamic efficiency. The swept-wing and delta aircraft combine the normal functions of the fuselage with a lifting function, they represent Integrated' layouts of the kind already mentioned in Chapter 2.

The aerodynamic disadvantages of the all-wing machines centered on the inferior lift/drag. High lift with low aspect ratio is inevitably associated with large angles of attack and high lift-dependent drag. There is the added problem of the smaller **CG** margin, i.e. physically smaller, with the higher aspect ratio swept-wing aircraft, that makes it difficult to balance without a more careful weighing and arrangement of payload than is theoretically necessary with the delta.

The structure weight of the all-wing designs was about 26% of the all-up weight, and 29% in the case of the conventional aircraft. The powerplant weight of the all-wing aircraft tended to be higher than that of the conventional, because in the engine failure case they needed more powerful units to compensate for the lower maximum lift/drag.

Both all-wing aeroplanes had wing areas around 2,100 ft^2, giving $span^2$/wetted areas around 1, an aspect ration of 2.8, a maximum lift coefficient of 1.3 and a wing loading of about 37 lb/ft^2. Thickness ratios of the wings were 25% for the swept-wing and 20% reducing to 12% for the delta. The conventional aeroplane had a wing area of nearly 1,500ft^2, aspect ratio 7, maximum lift coefficient of 2.3, a wing loading of 54 lb/ft^2, and a total wetted area 25% greater than the all-wing aircraft, giving a $span^2$/wetted area of 1.45. Using Fig. 6.23 as a guide we may estimate that the conventional aeroplane has an $(L/D)_{max}$ about 20% better than the all-wing aircraft, although it may be on the low side.

The studies showed that costs were marginally in favor of the conventional design, at the 100-seat size. The formula direct operating cost was 0.77 p/seat-mile for the conventional aircraft, 0.80 p for the delta and 0.82 p for the swept-wing. An interesting result, however, was that as the number of passengers to be carried increased, the disadvantages of the all-wing aircraft decreased, until at around 150 passengers there was no difference between all three designs.

What is important, within the context of this book, is that three such widely differing layouts should be so comparable. One grows used to thin wing sections for high-speed flight, and maximum thickness/chords of 12-15% for low subsonic flight. Here instead were thick-sectioned, all-wing machines competing favorably, at fairly high-subsonic speed, with a classical aircraft. In so doing they tend to point to the conclusion that there is no single answer to the way of meeting a requirement: there is just a range of different answers with differing merits. In drawing this conclusion one might add that the great beauty of the study of aircraft design lies in the variety of pathways that can be explored when looking for an optimum aircraft.

C.1.2 Post-Aerobus developments

Early Aerobus studies centered around 100-150 passengers. A number of projects followed and one, with a prophetic feature, was the French Nord-600 which was published in 1965 (Fig. C.4). It had a double-bubble fuselage lying on its side, seated ten abreast and had three or four turbojet engines in a tail cluster, a classic configuration of fuselage, swept wings and a large swept fin with a high-set tailplane.

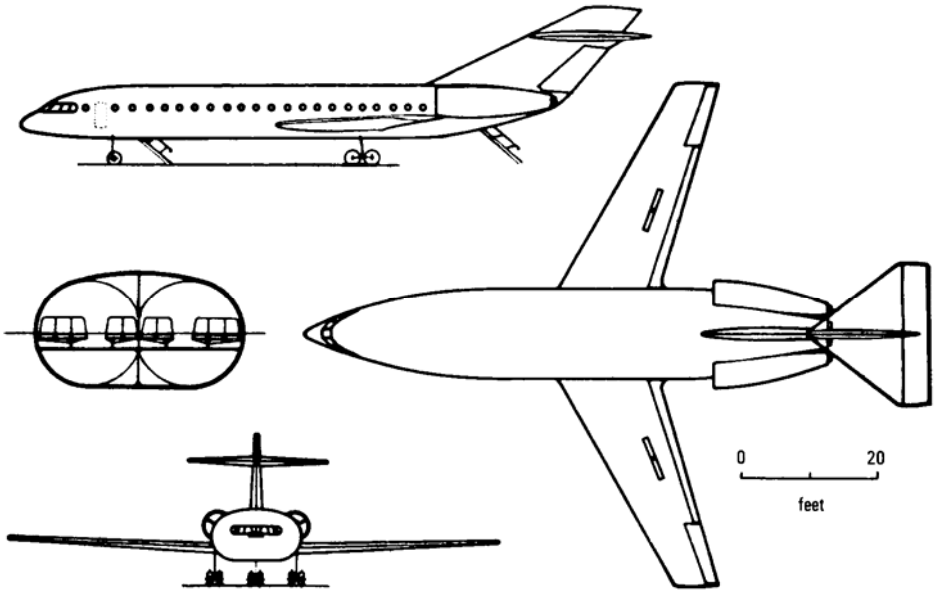

Fig. C.4 The Nord-600 project 'Airbus' (France, 1965).

Perhaps wrongly, as we shall see when we come to evacuation of passengers in an emergency, the side-by-side double-bubble led nowhere, then, beyond pointing to the need for much larger jet airliners. The trend was to wide bodies and double decks, one above the other, within a smoothly faired pressurized fuselage of oval section. Future three-decker projects have the upper two decks as passenger cabins, with the lower providing bar facilities in what was originally part of the hold. Cargo and baggage are to be stowed in the after part of the hold.

As the manufactures in Europe found common cause in cooperation, particularly between France and Britain (already sharing supersonic transport work on Concorde), it became clear that there were markets for aircraft carrying more than 250 passengers. By now the term Aerobus had disappeared, to be replaced by the wide-body 'Airbus'.

In France, Airbus Industrie was launched in 1970 to manage, develop, manufacture and support a large-capacity, wide-bodied, medium to long-haul twin-engined A300, carrying 266 passengers. That management now extends to a family which includes A300-600 and its related SATIC A300-6005T Beluga Super-Transporter. The A300 has led to the A310, A319, A320, A321, A330, A340 and the A3XX project, an ultra-high capacity airliner, to carry between 530 and 800 passengers.

(picture)
Plate C-1 The Satic A300-600ST, based upon the Aerospatiale Airbus A300. Referred to as the Beluga, it is officially named the Super Transporter, designed primarily to carry Airbus assemblies between factories in the Consortium, but capable of lifting a variety of heavy and awkward loads. The aeroplane is the result of the partnership between Aerospatiale and Daimler-Benz.

Apart from the wide body of the basic A300 family, a singular aerodynamic feature is the rear-loaded (supercritical) aerofoil section of the wing, which is compared with a conventional high-speed section in Fig. C.5. In the cruise the centre of pressure is further aft than with a conventional section. This has the effect of causing the wings to be mounted further forward on the fuselage, giving the Airbus family the appearance of having shorter forebodies than comparable aircraft, compared with body length aft of the wings. While C_{DF} of a supercritical section is marginally increased, M_{crit}, the critical Mach number and the cruising speed are faster.

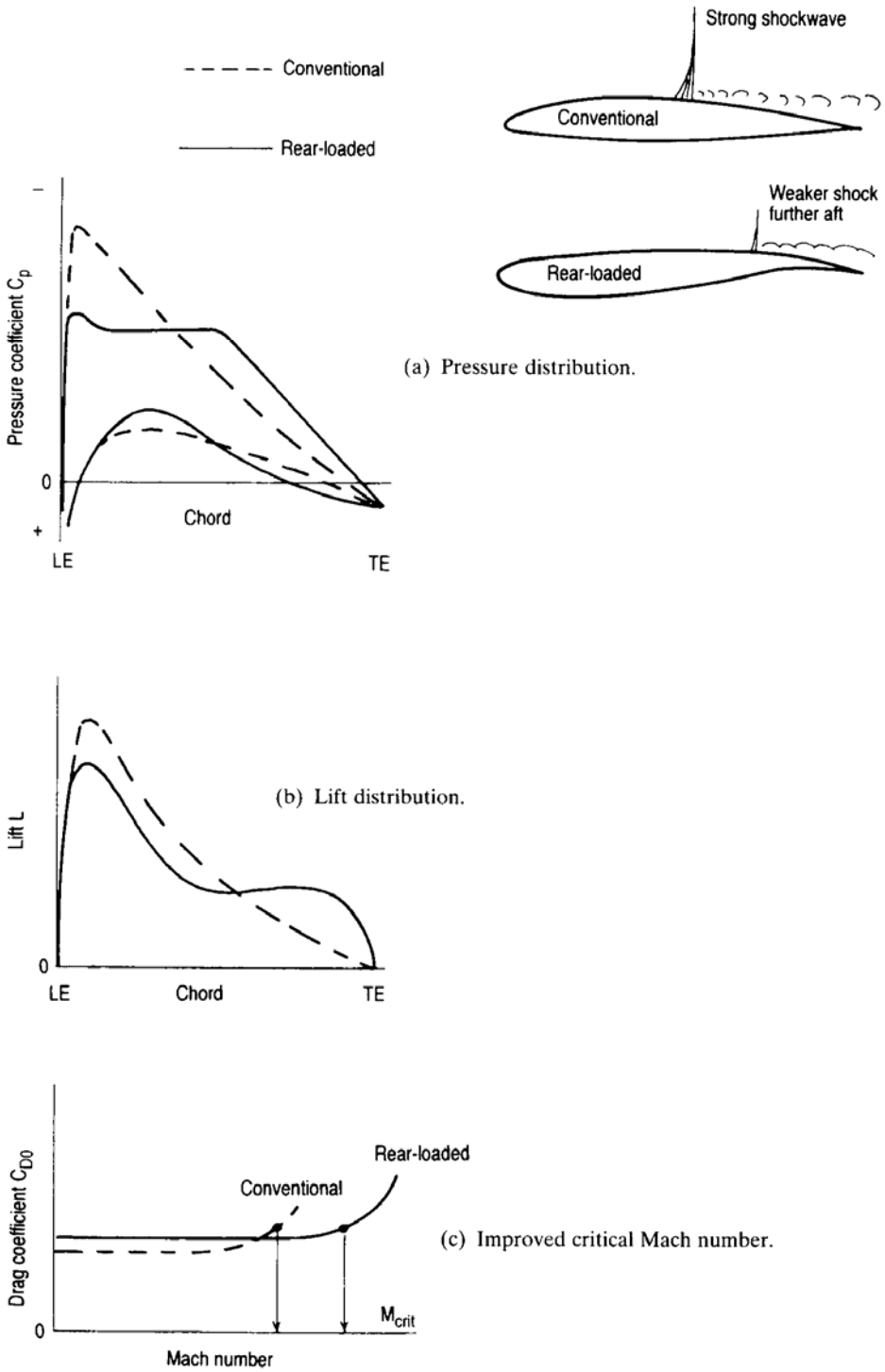

Fig. C.5 Comparison of conventional and rear-loaded (supercritical) aerofoil sections.

As this is written the world airliner market has two competitive contenders: Boeing, linked with McDonnell Douglas in the USA; and Airbus Industrie in France. The latter has four prime contractors, all European (Aerospatiale, Daimler-Benz Aerospace Airbus, British Aerospace Airbus and CASA (Construcciones Aeronauticas SA)).

Market realities

Airbus Industrie maintains in its Global Market Forecast (1997) that as far ahead as 2016 there is a potential market for over 1400 new airliners with more than 400 seats. A Boeing proposal for 747-500 and -600 derivatives does not yet appear to have enthused the airlines, in spite of the success of the 747 family. There are several possible reasons:

(1) Perhaps such aircraft are too large for the market to sustain? For example, the upper deck of the 747-600X could accommodate the fuselage of a standard Boeing 737. The diameter of a fan-duct is about the same as the diameter of the fuselage of the 757.

(2) Current development costs could be around $\$10^9$ or more.

(3) Such high costs introduce considerable financial risk for potential customers.

(4) Capacity and height will make it hard to manage evacuation in an emergency.
The question posed with relevance by the Leader in *Flight International* for 12-18 March 1997: 'Is Airbus wrong to try to create the market by creating the aircraft, or is Boeing wrong by waiting for the market to create the need for the aircraft?' It all depends upon the travelling public. If it decides that it wants mass travel in the future, as is believed in Europe, then it will get it. Meanwhile, the prudent manufacturers continue with their project studies.

There is the commercial danger of manufacturers over-reaching themselves. Development costs of aeroplanes with nearly 1000 seats are now too high to contemplate for the aircraft industry of one continent alone, let alone one country. From the way in which air transport is developing, with its long lead-times, and longevity of airframes in service, one cannot point in any direction with certainty.

One argument maintains that it is possible, before the middle of the 21st Century, that the long-haul travelling public will be carried in one design of aeroplane. On the other hand, smaller designs are being shaped to fly increasingly longer ranges. It is argued that they will in due course rival the giants, covering the same world air routes in stages which depend upon load. Regardless of which argument wins, competition for that global leadership remains between the USA and Europe.

An example of the formula and the philosophy behind the argument for the smaller aircraft instead of the giant is the Boeing 777. This, in Fig. C.6, together with the inset, shows that it represents a family with variations between its members, none of which approach the 1000-seat category. It confirms what was pointed out earlier in Chapter 4, when discussing range and endurance flying. For a given airframe, disposable load (payload + fuel) is fixed, making range and payload mutually dependent. To increase either without decreasing the other means making the aeroplane larger by stretching it somehow. That 'somehow' depends upon a commercially lethal cost-benefit equation with which every manufacturer has to contend.

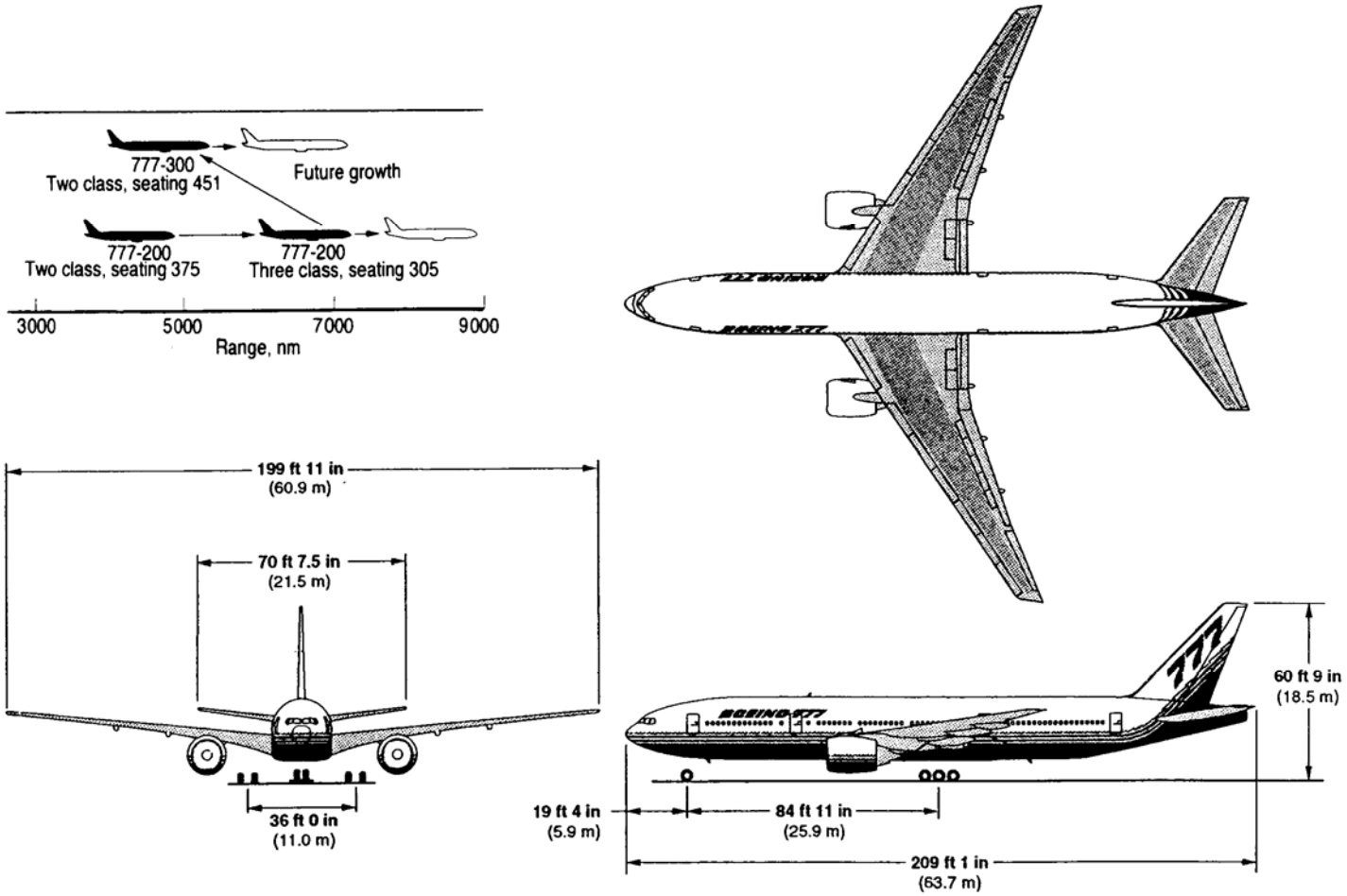

Fig. C6 The Boeing 777 represents a family of related seating capacities and ranges. The seating arrangement and spacing of exits are shown in (b).

The proposals to stretch the basic 747-400 to become the larger 747-500X and -600X, possibly with further giants beyond, are typical of such speculative product developments. They have been abandoned (for the time being at least), not because of technical impossibility, but almost certainly because the 'up-front' down-payments by customers, which all competitive manufacturers must pursue if they are to remain in business, have not been forthcoming.

ETOPS

Extended twin operations, ETOPS, is an accountant-driven set of cost-cutting rules produced by the certificating authorities, by means of which twin-engined airliners can be used in place of four-engined on long-haul routes with similar loads. The rules rely upon statistical assessment of the safety and reliability of engines and aircraft. Roughly, for a given level of engine reliability, the more engines one has fitted, the more expensive and the greater the chance of one failing. Therefore, fit the aeroplane with fewer, bigger engines, with power enough to continue the flight in the event of one failing. The strict rules of the authorities now enable cheaper twin-engined aircraft to operate on routes they were not permitted to fly in the past. Before ETOPS, if an engine failed, emergency alternate airfields were too far away and took too long to reach on the one remaining engine, under the rules which then applied.

In spite of statistical safety of twin-engined aircraft with fewer engines to fail than four, there is still a gut-dislike of ETOPS among aircrew. The failure of one of two engines, no matter how powerful, in mid-Atlantic or Pacific, several hours away from an alternate airfield, with a full load of several hundred passengers, does not make for peaceful contemplation by any flight-deck crew. Airframe-drivers do not sit confidently with accountants and statisticians.

C.1.3 Design to ease emergency evacuation of passengers

Transport aeroplanes carrying 600, 800 or 1000 passengers pose major problems when it comes to emergency evacuation. Ramsden (1994), in his RAeS paper *Towards file Megajet*, looked at the compromises to be made with an aeroplane intended to carry 1,100 passengers in super-comfort, served by a shopping mall and restaurants, all contained within a three-blister fuselage. His fuselage section, shown in Fig. C.7, has four decks and eleven stairways/ladders, and shows the routes to be taken when evacuating the nine compartments open to access by passengers and crew in an emergency, both on the ground and in water. It has the merit of spreading people sideways, reminiscent of the Nord 600 in Fig. C.4, instead of vertically, which is commonly the case with current proposals.

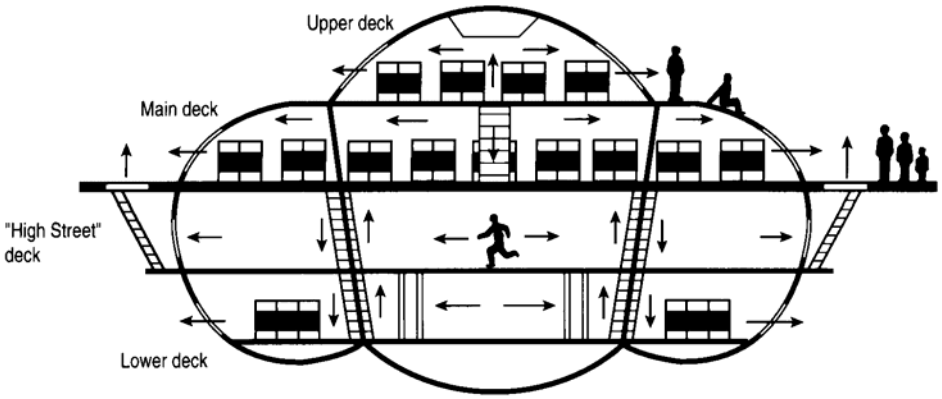

Fig. C.7 The triple-bubble Megajet is a design study for an 1,100-seat passenger aircraft. This section shows four decks, eight exits and ii flights of stairs to enable it to be evacuated in 90 seconds.

Even with wheels down and at rest there can be life-threatening aircraft fires on the ground. Much was learned from one at Manchester Airport in 1985, involving a twin-jet airliner which came to rest after an aborted take-off, pointing in a direction in which windblown flames destroyed a large part of the fuselage, before all of the passengers could be evacuated. It is hard enough to off-load passengers in a panic through side exits on a single-deck cabin. It is harder still from a double-decker - let alone a future three-decker - with cabins stacked one above the other. How to get 400 passengers calmly down stairs into another 400 or 600-strong melee, struggling to leave the deck below, with the athletic clambering over seat backs, trapping passengers beneath them, is more amenable to strong nerves than calculation.

A giant two or three-decker airliner is too high for inflatable slides. A strong wind will lift and tangle them, or blow them back, winding them across the fuselage. The slides must lead down to the wings, to reduce the drop. One is limited by the number of slides needed, and the spacing fore and aft between those of the upper and lower decks. The spacing is dictated by the number of seats in between the exits.

It also takes considerable nerve, even when young and healthy, to leap into the dark down a steep, oscillating, pneumatic slope, without shoes (which must be removed to prevent puncturing the slide). For a mother with a babe in arms, the elderly or disabled, the thought alone can be a nightmare, making one reluctant to do it at all.

There are also cultural difficulties. One has to contend with passengers who, with the strong religious belief that 'It is written', surrender to fate and refuse to move, obstructing others instead of trying to get out as fast as possible.

Even if only once in a million, these problems have happened in the past; they point to the need for a different approach. One example from early Aerobus studies (Section C.1) looked at ways of carrying up to 250 passengers or freight, by spreading the mass across the wing span to provide bending relief. While there

will still be difficulties when evacuating the passengers in an emergency, just as with any single-decker, they are not made worse by a vertical arrangement of decks.

A design study reported to be shared between McDonnell Douglas, NASA and a number of universities in the USA, has a configuration similar to that shown in Fig. C.8; it is compared with a Boeing 747-400 at the same scale. The final version is to be a double-deck 800 seater, with a range of 8,000 miles at a speed around M = 0.8 at 40,000ft.

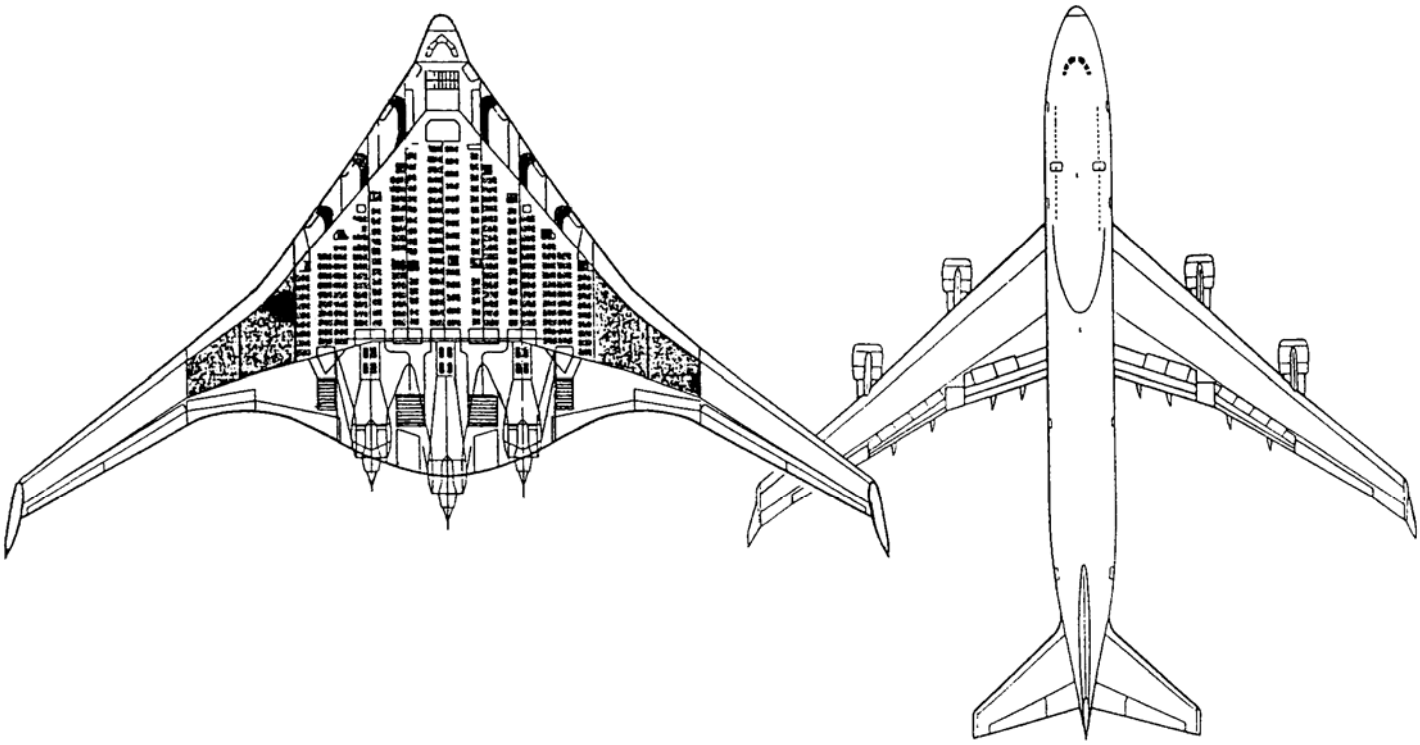

Fig. C.8 Comparison between a Douglas/NASA flying-wing with lifting-body and 528 seats on one deck, and the broadly comparable Boeing 747-400, with a smaller upper-deck in the hump and seating for 568 passengers. Compare with the historic wide-body French Nord-600 'Airbus' project in Fig. C.4.

Assuming that the tailless aircraft shown here is a single-deck passenger version only (with freight and baggage on the lower deck), it would then accommodate about the same number of passengers as the 747-400, which includes a double-deck hump. Both aircraft have some ten exits showing: the 747 in the form of side-doors; while the all-wing has six in the leading edge and four wide exits aft. The designers believe that the combination of numerous emergency exits, chutes and tunnels satisfy the safety regulations.

However, what of a wheels-up landing, or what of ditching, if gangways and stairs lead downwards from the cabin into water? Can dinghies be boarded with ease and got clear? Might evacuation time per head be longer than for a multi-decker aircraft?

In flight, what sort of a ride will passengers expect when seated furthest outboard from the centre of gravity? One solution is to locate fuel, freight and baggage outboard, to reduce the lateral distance to the outermost seats. Another solution is to make flat (un-banked) turns. These are said to be feasible, using high-order flying controls. However, how will passengers take to the sensation of being accelerated sideways centripetally, instead of feeling it through the seat? Might not it be more nauseating?

C.2 Heavy (long-haul) transport aeroplanes

Heavy transport aircraft include both civil freighters and military transports, of which the latter include both strategic and tactical aeroplanes. Most are designed to lift awkward, heavy loads. Many civil freighters in use throughout the world in the 1990s were developed from military machines, or show clearly that they were designed with military requirements in mind.

Strategic aeroplanes are those intended to fly intercontinental distances with loads of national importance, such as troops and war material. Tactical aeroplanes have to fly shorter distances within a region, often delivering loads to sites without proper airfield facilities. It can be argued that both strategic and tactical machines should ideally, be one and the same, so that prepared loads do not have to be broken down - or cause wasted time because of excessive handling - for carriage by other aircraft. On the other hand, there are good arguments, based upon total economics, for designing different aircraft for each role able to handle a common payload. In the tactical role there is a need for VSTOL machines, and an interesting idea is the air-portable package of lifting engines that could be added to each wing of a conventional aircraft to fit it for the VSTOL role. The tactical transport requires a multi-wheel undercarriage with low LCN tyres for operation from

soft unprepared surfaces, and the ability to carry all of the equipment needed to operate in the field.

The most significant difficulties with V/STOL aeroplanes are those resulting from noise and cost. Noise is a serious problem when the lifting engines use high induced velocities -a feature of high disc loadings - and the aircraft is large. The high cost is caused by the complexity of such aircraft and is reflected in both the first (i.e. production) cost and the rate of depreciation. Fuel consumption is usually high and increases the operating cost appreciably. Depending upon the particular aircraft, VTOL reduces the range to something like a 25-50% of the range in the conventional role.

VTOL has not been pursued for civil work, because of the noise and high cost. STOL has applications in remote areas, such as landing heavy mining equipment somewhere well beyond the reach of adequate road and rail facilities. The helicopter is much quieter for VTOL, because of the lower disc loading and slipstream velocity, but productivity over a long range is poor compared with the aeroplane. It is perhaps significant that the large helicopter has been mainly developed in Russia and America, where long distances can be conveniently flown in short stages without the problems of overflying rights and political barriers.

C.2.1 Trends in development

The fuselage of a freighter has large stowage volume, generous sections that are widest at the floor, and easy access for awkward loads. Floors are close to the ground (most aircraft are high winged for this purpose) allowing loads to be run straight off the tailboards of trucks. Ideally there are facilities for nose and tail loading. Most must satisfy the requirement for parachuting loads. This poses a problem in ramp design, for ramps must not be excessively heavy, yet they must be strong enough to support the cantilever load of a heavy pallet, or vehicle, being dragged out of the hold by parachute. Airframe buffeting with tail doors open sometimes causes aerodynamic and structural problems.

Two typical designs are shown in Figs C.9 and C.10. The first, the F-61 VTOL freighter was the 1961 design study of the College of Aeronautics, Cranfield. The second, the Blackburn B.107A of 1956 was to have been a development of the Beverley. Both are roughly comparable, except that the maximum payloads were 77,000 lb for the F-61 and 53,000 lb for the B.107A for gross weights of 250,000 lb and 175,000 lb, respectively. The F-61 carried about 60,000 lb for 1,600 nm, the distance over which the B.107A carried 53,000 lb. Both had similar Rolls-Royce Tyne turboprop engines, but the F-61 also had two pods, totaling 44 lift engines of 8,000 lb nominal thrust. The control system for such a large number of engines posed severe problems in design.

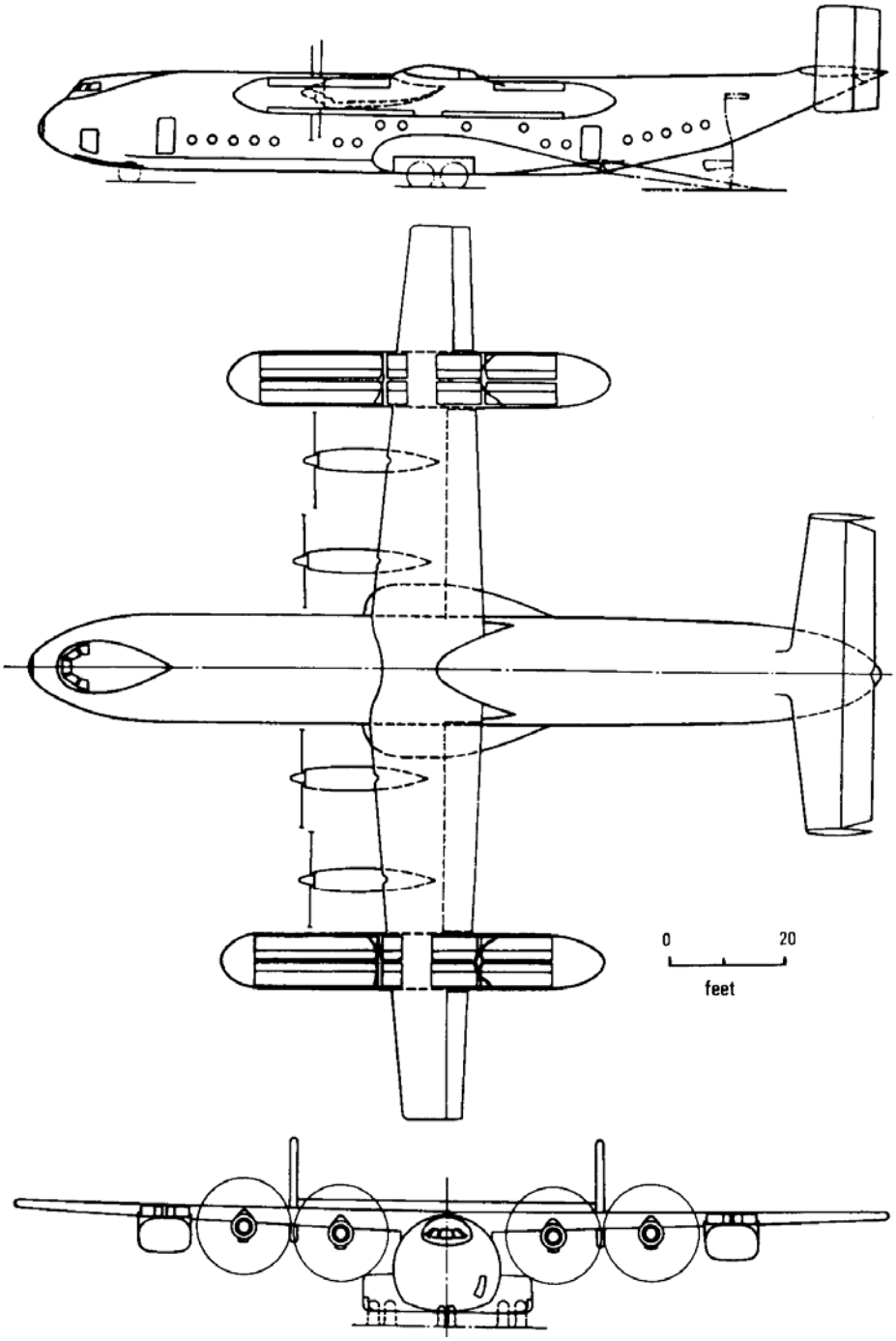

Fig. C.9 Strategic freighter (College of Aeronautics, 1961).

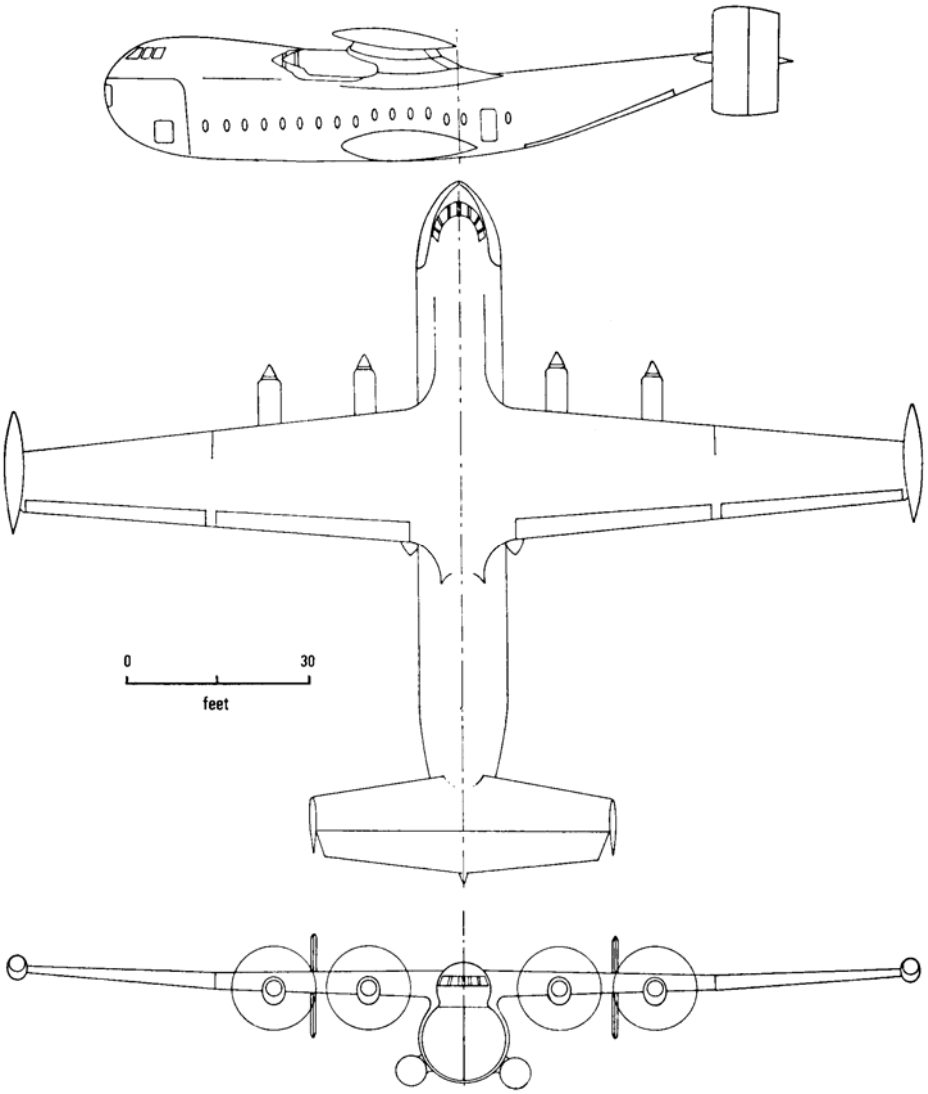

Fig. C.10 Blackburn B.107A transport aircraft (development of the Beverley. about 1956).

Both projects were then large by Western European standards, but small compared with developments in the USA and USSR of what may fairly be described as the evolution of a new class of very heavy transport aircraft. Figure C11 illustrates a range of working heavy-lift transports of the period, with lengths of three aircraft in current use added. The top three aeroplanes were entries for the US C-5A design competition, to carry payloads of 100,000lb (45.45 tons) for 5,500 nm, 200,000 lb (91 tons) beyond 2,500 nm. The Douglas C-5A Galaxy has a maximum range of 7,000nm and a maximum payload of 300,000lb (136.4 tons) over short distances.

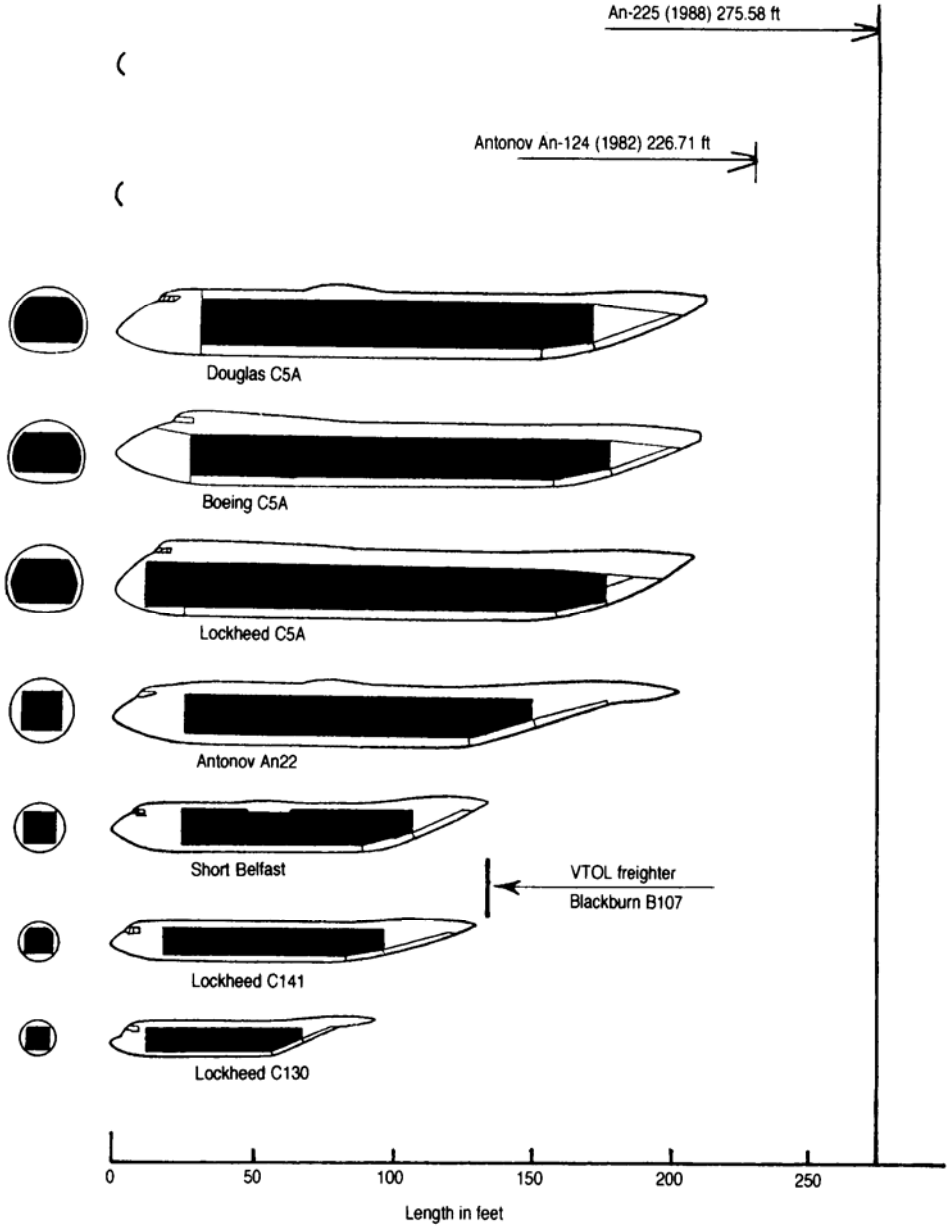

Fig. C.11 The growth in size of military transport aeroplanes in the 30 years spanning the 1960s to the 1990s. There is no technical limit to size, as this is written, beyond the space to park on an airfield and engines powerful enough to do the job. Air traffic control is another matter.

The Russians, however, enlarged the heavy transport class by building even heavier aircraft, with quadrupled fly-by-wire control systems, and fully pressurized. First came the Antonov An-124 (1982) which, recorded but not illustrated in Fig. C.11, has a length of 226.71 ft. a maximum payload of 150 tons, and a maximum fuel range of 8,900 nm. This was followed from the same stable by the An-225 Mriya (Fig. C.12) a stretched fuselage and wing version of the An-124. If first flew in 1988 and has a length of 275.58 ft, a maximum payload of 551,150 lb (250 tons) and a range when carrying 200 tons of 2,425 nm. The aeroplane was designed for the carriage of heavy loads, internally and externally, like the complete Russian space shuttle orbiter 'Buran', which has an empty weight of 70 tons and is comparable with the US Shuttle Challenger. The An-225 is the first aeroplane to exceed 1,000,000 lb (455 tons) gross weight.

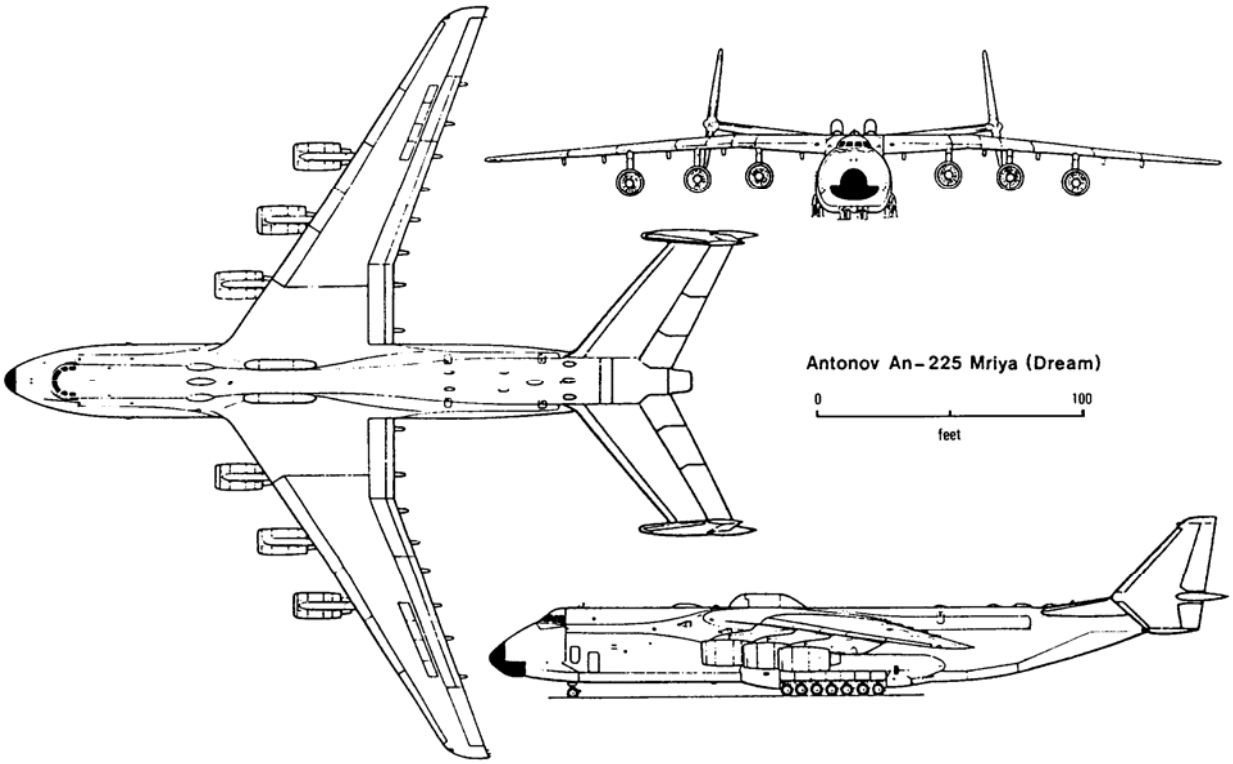

Fig. C.12 Antonov AN-225 Mriya six-turbofan heavy transport.

The stretching of existing transport aircraft to carry such unusual loads is full of possibilities. Smaller, but wholly representative, is the French Airbus Industrie A300-600 Super Transporter, Beluga, which appeared at the 1995 Salon du Bourget. It is modified to carry unusual loads in a large external fairing, such as Airbus wings, built in the UK, for final assembly of aircraft in France. It has a length of 184 ft and is marked on Fig. C.11. Maximum payload is 468 tons, over a range of 990 nm.

The heavy-lift transport aeroplane is subsonic and is likely to remain so. The costs and ecological problems of heavy-lift supersonic transports make them impracticable.

Stretch by multiplication and automation

A study by the Aeronautics Department of a British university proposes doubling payload carried over the same range by doubling the number of aircraft, which then fly as a formation pair. The No. 2 aircraft is slaved by automatic pilot to the leader, the flight crew of which is responsible for operation of the pair.

Take-off and landing of both aircraft would be staggered and fully automatic, the No. 2 joining the leader in the climb and easing back in the descent. The slaved No. 2 has a monitoring crew, able to take command in the event of an emergency.

The bare bones of the idea are rational, logical and attractive as first sight. One can argue that military combat flying is carried out with pairs of aircraft, all communications being between the formation leader and the controller on the ground. One can explore the surface of Mars, millions of miles away, with an automatic vehicle under radio control. Automatic flight with 'uninhabited' (unmanned) reconnaissance aircraft is now commonplace. Then why not two airliners operating as a fully automated pair?

There is no answer to satisfy both the practical pilot and the theoretical engineer. With twice as many aircraft there are twice the number of things to go wrong. It is not unknown for one of a pair to become unserviceable in flight, or to suffer an emergency. It is then economically impossible to follow an operational military procedure, which is to remain as a pair and divert to the nearest alternate airfield.

If 1,000 passengers are carried in two airliners, 500 will not wish to divert, they will expect to be delivered to their destination. So, if the No. 2 of the pair must revert to autonomous flight in an emergency, why complicate matters by giving both flight-deck crews something more elaborate to think about in the first place?

The cost-benefit is not at first obvious, because it is hard to visualize savings by making certain items redundant, only to find that they are still needed in a 10^{-6} or 10^{-7} emergency (see Fig. G.1(b)).

C.2.2 Laminar possibilities

The future development of the long-range passenger-carrying aeroplane depends in no small measure upon fuel supplies. To increase specific air range aerodynamically involves drag reduction; there are two ways of attempting to achieve this. The first is by laminarization of a large part of the airframe surface, 70% or more, to

bring about greatly improved lift/drag ratios. The second is to improve (L/D) by improving the configuration of an aeroplane. We have already seen how the Aerobus studies pointed the way to spreading payload across the span of the wings, thereby shortening and cleaning up the airframe. The combination of these measures, with active controls driven by computers and fly-by-wire, opens many possibilities, as well as their own share of problems, already touched upon.

In the UK the late Handley Page company carried out extensive studies of laminarization of the boundary layer by flow control. One project, the HPI17, was said to be capable of carrying 300 passengers and 20,000lb (9.1 tons) of freight across the North Atlantic for an all-up weight of 330,000lb (150 tons). The aeroplane was to span 148ft (45m), and was expected to carry 37.27 tons over a 4,340nm stage at M = 0.8, with full reserves. A range of 6,000nm was claimed with a lighter payload. The modern turbofan engine, with its improved specific fuel consumption, would have provided longer ranges than those quoted for the turbojets then available.

Another aeroplane to which the same observation applied and with which the Handley Page project may be compared was the classically configured 'stretched' BAC (Vickers) VC10, with fuselage-mounted engines grouped at the tail. The stretched fuselage was 33ft longer than the standard VC10, then in service, with a seating capacity for 265 passengers on two decks. The double-bubble fuselage was arranged to carry 80% of the passengers in the upper saloon and the remainder with (but separated from) freight in the lower. The aeroplane was then known as the DB265. It was claimed to be able to carry a payload of 72,000 lb (32.7 tons) for 2,800nm for an all-up weight of 370,000lb (1,682 tons), making it broadly comparable with the HP117. Both aircraft projects are shown in Fig. C.13.

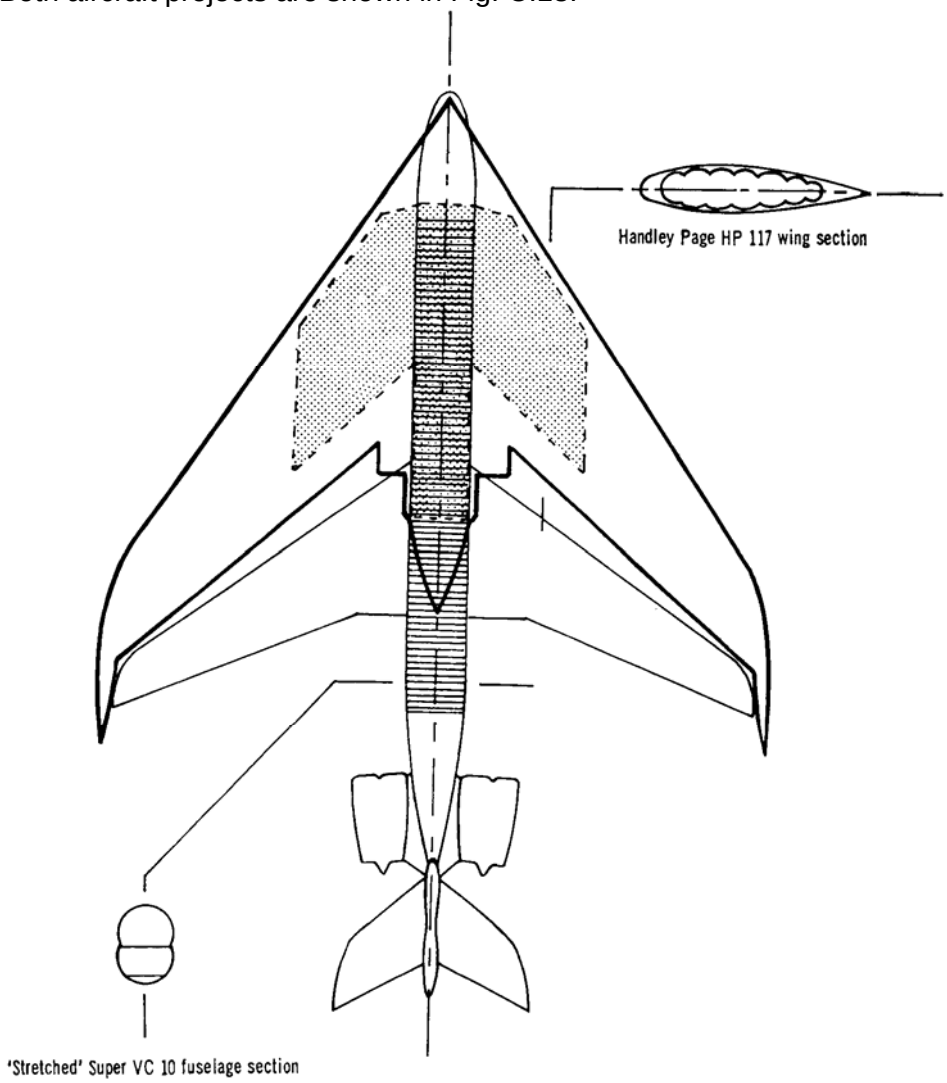

Fig. C.13 Provisional comparison between tailless (300 passenger) Handley Page HPI17 and 'stretched' version (265 passenger) BAC (Vickers) Super VC10. The laminarized version of the HP1I7 could have had about double the (L/D) of an un-laminarized version.

Basing deductions on published and unconfirmed figures, it appears that the Handley Page HP117, a flying-wing with laminar flow control, would have carried a percentage payload of 32%, as against the 19.5% of the conventional wing-plus-body DB265. The conclusion was that laminarization could lead to huge savings in fuel weight - while much reducing ecologically damaging exhaust products which are dumped into the atmosphere - in spite of the increased weight of the boundary layer control system, thus permitting heavier payloads to be carried.

The basic all-wing design in Fig. C.8 revives ideas embodied in the HP 117, but represents technological advances not then proven for Handley Page; it is reported to have three semiburied Pratt & Whitney advanced ducted propeller engines mounted aft. The intention is that the boundary layer, stagnating on its way over the centre-section, is drawn into a combined inlet, from which it is ducted to each engine. The arrangement promises improved (L/D) and reduced specific fuel consumption and noise. It is also proposed to use carbon-composites extensively for strength, stiffness and lightness.

Although projects look promising on paper and upon computer screens, practical hands-on laminarization remains some way off. It is technically easier to blow into a boundary layer, energizing but thickening it, than it is to suck away a decaying layer and dump it back into the atmosphere. A major obstacle with suction is maintaining cleanliness and overall efficiency of a perforated surface. While effective and proven (for example with the Blackburn Buccaneer), blowing does not have as great a benefit upon (L/D) as suction. Research and development costs tend to work out at around 50% of the first cost of a batch of 100 aircraft. Low direct operating costs per passenger mile might not be realizable in practice if a large bill for long term research and development has to be met by the civil operator.

Having said that, as long as the cost of research, development, materials and manufacture remain within one's own frontiers, then the money spent is rather like blood recirculating continuously in the vascular system: eventually it reaches all parts. Money saved on cancelled projects and spent instead on offshore purchases is gold down the drain.

Appendix D Supersonic Transports

Soviet Russia was the first to fly a supersonic transport aeroplane, the SST Tupolev Tu-144 Charger, on the last day of December in 1968, three months before the Anglo-French Concorde. The Tu-144 was the result of an espionage operation, which is reported to have secured for the Soviets the blueprints of Concorde. The Tu-144, although larger, heavier and less refined, nevertheless had a fundamentally similar configuration, and was nicknamed the 'Koncordski'. Tupolev modified and improved the aeroplane over a subsequent 5-year period. When it appeared at the 1973 Paris Air Show, Le Bourget, it was no longer a pure delta, instead it had grown retractable canard foreplanes (or 'moustaches') behind the cockpit to improve longitudinal control, off-design.

Tragically, the Tu-144 and crew were lost, together with eight French civilians, following the airshow, when a French military Mirage, on an unpublicized intelligence mission, attempted to take air-to-air photographs of the SST in poor visibility and broken cloud at about 4,000 ft. To avoid a collision, the extreme evasive nose-down 'bunt' that the surprised Russian pilot was forced to make is believed to have stalled all four engines. The aeroplane exceeded its limits, which led to an in-flight structural failure.

France and Russia covered up the story. The Russians did not want to reveal the structural weakness of the heavy SST, and the French did not want the public to know that the intelligence-gathering mission had gone badly wrong.

Tu-144 operations continued with Aeroflot for 102 commercial flights, before the type was withdrawn from service. Three flying examples remain usable for future supersonic research.

(picture)
Plate D-1 Russian Tupolev Tu-144 with 'moustache' canard aerofoils. These are retracted aft in the cruise, and deployed for low-speed handling. Because of normal flexural distortion of the structure, wing trailing-edge control and flap surfaces are built in sections. Each segment is driven by two jacks, housed in streamlined fairings.

D.1 Concorde

The origin of Concorde lay in the UK Supersonic Transport Aircraft Committee (STAC), formed in 1956, to examine possible lines of development of supersonic transport aircraft. The findings culminated in a report classified as 'Confidential UK Eyes Only'. In France, Avions Marcel Dassault and Sud-Aviation planned to co-operate in the production of a Super-Caravelle SST. Without publicity, a copy of the UK STAC report was passed to the French.

The Americans showed great interest in supersonic transport studies at about the same time, examining various solutions for a M = 3.0 design. Concorde, on the other hand, represented a smaller leap, being shaped for M = 2.2, the limit for conventional aluminium alloy structures.

Concorde was built by what in due course became Aerospatiale and British Aerospace. It suffered extreme opposition because of cost and noise, and the arguable criticism that only a handful were built, which can only carry what are regarded as 128 privileged passengers at M > 2 on mainly transatlantic routes, around 3,400 nm. Opponents assert, therefore, that in purely economic terms it has not been a success. Seen nationally and from the aeronautical point of view, it is a proven technical success, which still maintains the livelihoods of a considerable number of French and British engineers, scientists and manufacturing staff after

more than 40 years, during which the aeroplane has been fully operational for a quarter of a century, on airline service. In addition, the expertise Concorde represents, together with the 'spin-off' from research and development in aerodynamics, propulsion, materials and manufacturing technology, are of incalculable value if France and the UK are to continue to speak with technical authority on such matters. Concorde does not represent what was referred to at the end of Appendix C as 'gold down the drain', the bulk of the money invested continues to circulate as wages and taxes in the financial veins and arteries of France and Great Britain.

D.2 SST research for the 21st Century

The SST has proved its usefulness. There is intense competition between the USA and Europe to lead the manufacture of future generations of SSTs, while looking towards a market of around 500 units, carrying 250 instead of 100 passengers at a cruising speed of M = 2.05. The cost will be high, around £12 billion (say $20 billion), with a range of 6,500nm.

The companies aiming to complete a joint outline project are reported to be British Aerospace, Aerospatiale, Boeing-McDonnell Douglas, Deutsche Aerospace, Alenia in Italy, the Japan Aircraft Development Corporation, and Tupolev in Russia. The USA is said to have allocated around $1.5 billion for supersonic research and engines; and Japan has spent nearly $100 million already. It is anticipated that the annual passenger market is 50m USA-Europe, 20m USA-Asia, and 20m Europe-Asia. Time saved is estimated to be a little over one-half of the present flight times of subsonic, long-haul big-jets.

Relatively long sectors of the Concorde route between London and New York are subsonic, because of the damaging effects of the sonic boom. While the aerodynamics are understood, much work is needed to reduce boom effects, which could wreck the above estimates where long routes overfly northern Canada and Siberia.

As a way of easing the economics involved, it was reported late in 1996 that one of the three surviving Tu-144s is to be used in a joint US-Russian SST research program. One reason is that the US program is looking to achieve M = 2.4. While Concorde flies at M = 2.2, the Tu-144 achieves M = 2.35. It is a larger and more useful aeroplane than Concorde in which to install the necessary test equipment for experimental work; its flying qualities are a known quantity; and one might guess that its configuration is not very different from that being planned for M = 2.4.

Several SST concepts are discussed here which, with the exception of Concorde, were not adopted. It will be appreciated that lead time and the expense of producing an aeroplane for long operational service are vast. The concepts shown here are not simply 'fashions of last-year', they remain realistic possibilities, to be taken out, dusted off and tried again. The slewed-wing, discussed in Section D.6.2 and which appeared in the first edition is one design which is being reappraised. Whether or not it will be developed this time is not known, but computerized high-order control systems make this more likely than when the concept first appeared in the early 1960s. The cliche that there is nothing new under the Sun is as true in aeronautics as in anything else. What changes, in steps, is technology, which today enables an idea to be realized that appeared impracticable yesterday.

D.3 The general problem

The shape of a supersonic aeroplane depends far more upon its design speed than does a subsonic aeroplane, and the design speed of a transport aircraft depends in turn upon where and how far it will fly. A simple, though revealing, graph is sketched in Fig. D.1 in which the flying times are plotted as block times (and include an allowance for take-off, climb, descent and landing) against three stage ranges of 800, 1,400 (European) and 3,000nm (say London to New York).

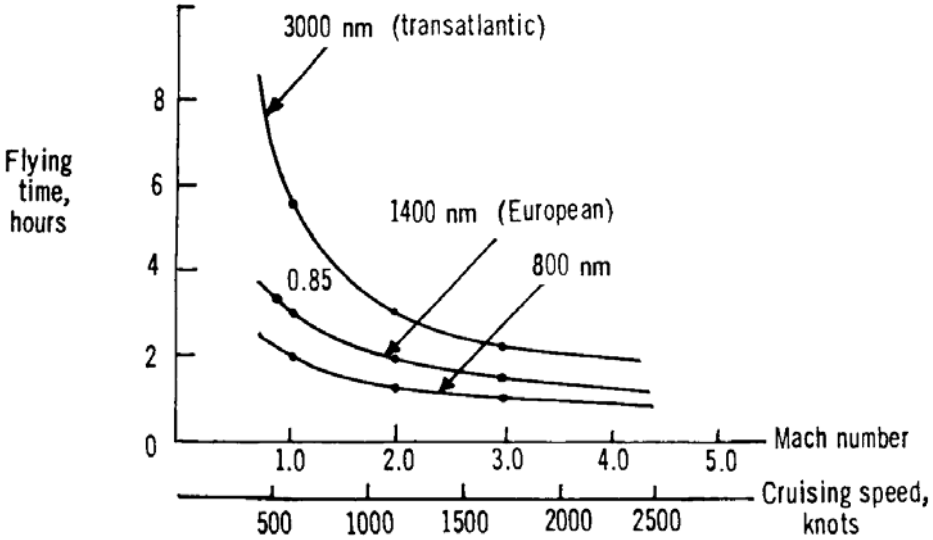

Fig. D.1 Variation in block time with stage length and cruising speed.

Starting from a current M = 0.7, there is a considerable saving in flying time on the longest route if the speed is increased by almost any increment, up to M = 3. Over the 1,400nm route time is saved up to M = 1.2, but above that any further increase is hardly worth the effort. Over the short 800nm route there is little, beyond prestige, to be gained from supersonic speeds.

Referring back to Eqn (4-12) we see that the range flying efficiency of an aeroplane depends upon how much speed can be bought per unit of fuel flow, how much lift can be got from the air for how little effort, and how much fuel can be loaded into the structure without loss of payload. We have seen that turbojet engines can be used for such speeds, that aerodynamic shapes can be designed to provide the required aerodynamic efficiency, but that kinetic heating raises severe structural problems beyond M = 2.2. Supersonic aeroplanes are bigger than their subsonic counterparts, payload for payload, because of the additional fuel that must be carried. To carry 100 passengers to New York at M = 2 we can expect to see aeroplanes around 300,000lb all-up weight, with 55% of it being taken up with fuel.

The economy of a design depends upon such factors as block speed, fuel cost, payload, airframe and powerplant weights and costs, stage lengths, and the number of journeys that can be made by one aircraft in a year. Figure D.2 shows the variation that occurs in operating costs with design Mach number.

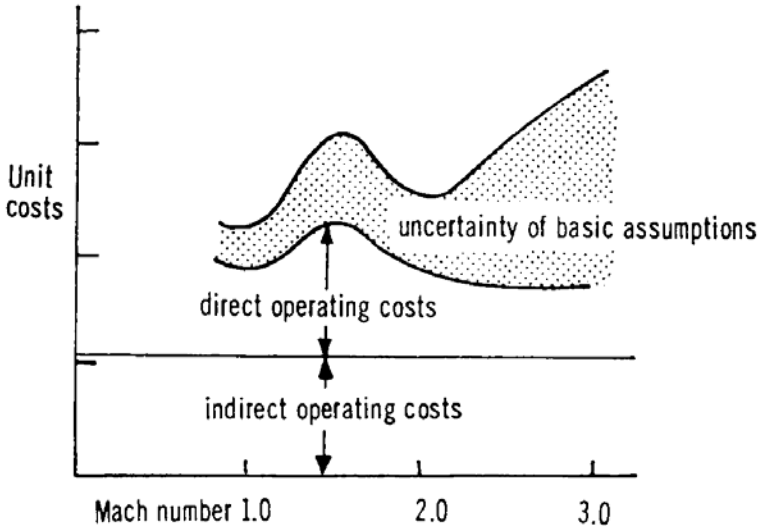

Fig. D.2 General variation in total operating cost with cruising speed.

The hump is partly due to an inability to design shapes which have enough lift/drag between M = 1.2 and 1.8. Looking again at Fig. 6.21, we see that (L/D) falls rapidly in this region, and the rate at which it falls is too fast to be compensated for by the rising M/c' or V/c' of the propulsive efficiency.

Cruising altitudes are above 50,000 ft and this introduces some novel design problems. A M = 2.2 aircraft cruises at about 60,000ft, while a M = 3.0 machine cruises nearer 80,000 ft. At the lower altitude neither cosmic radiation nor ozone present excessive hazards and, in an emergency, a descent can be made more rapidly from 60,000ft than 80,000ft. Beyond 60,000ft a sealed cabin is required and a more complicated, heavier, air-conditioning system. Cosmic radiation is likely to be hazardous, and aircrew will be limited in their flying time spent at altitude. An American Federal Aviation Agency doctor is reported as saying that such radiation 'may shorten the life-span by 5-10%'.

It was recommended initially that design studies should be made in the UK of a M = 1.2 aircraft with swept wings, and a slender delta aircraft for flight at M = 1.8. The swept-wing machine had an M-planform, as shown in Fig. D.3, while the delta was chosen for higher speeds, because of the good lift/drag characteristics, the large internal volume and the good aero-elastic shape.

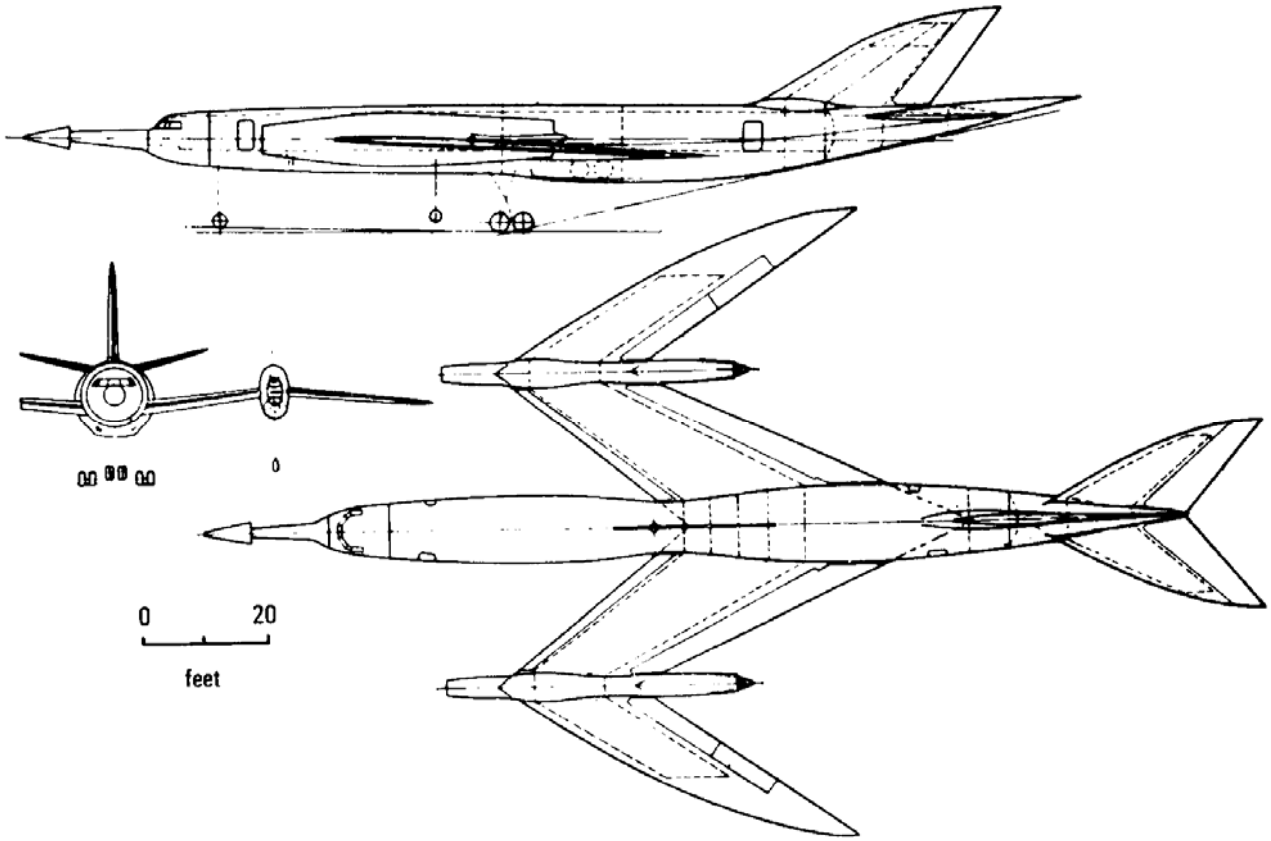

Fig. D.3 (M = 1.2) Medium-range SST with area-ruled fuselage and engine nacelles.

The fuselage of a supersonic aircraft makes a considerable contribution to the drag of the whole, and of the fuselage drag that of the canopy contributes perhaps one-third, or something like 7 or 8% of the total drag. The optical properties of highly swept, low-drag windscreens leave much to be desired. Refraction, large angle of attack on the approach and poor visibility make the design of satisfactory windscreens a problem with supersonic aircraft, for the surfaces must be highly swept for low drag, but they should be steep (ideally normal to the line of sight) for good vision. The conical spike of the M-wing aeroplane is an attempt to produce a satisfactory airflow with a reasonable windscreen profile. Higher-speed aircraft feature retractable visors and drooping noses and even retractable cockpits have been proposed.

Before discussing certain SST shapes, Fig. D.4 is of striking interest, a result of some of the work of Dr Barnes Wallis, designer of the variable-sweep Swallow, shown in Plate 2-1. The curve relates, in effect, specific fuel consumption and air miles per gallon for different speeds and heights. The same quantity of fuel has been used for the calculations throughout, and the curve corresponds very closely with that for a constant EAS of 350k. It shows that the optimum range speed for best economy is about M = 0.5 (500 ft/sec) at sea level, but that this increases steadily to M = 4.5 (4,500ft/sec) at a little over 90,000ft. At that speed steel can no longer be used and although technology exists to achieve greater speeds the cost of this is prohibitive for civil use. If the curve is assumed to join the design points for best economy, then the configuration of an efficient long-range aeroplane must satisfy the speed and height combination at any point.

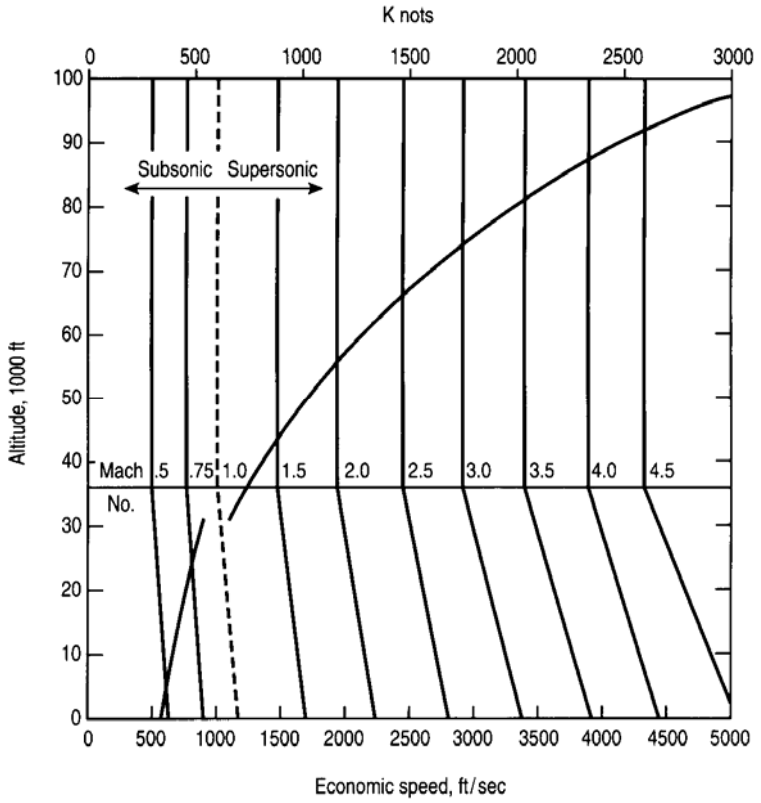

Fig. D.4 Economic speed and height.

D.4 M = 2 aeroplanes

Britain and France decided to build an SST in the M = 2 class because it could be made within the prevailing state-of-the-art, using aluminium alloys and structural techniques. The aircraft, which has an 'ogee' delta wing, is shown in Fig. D.5. Earlier drawings showed the aircraft with a marked camber to the nose, so that the bottom profile appeared as an almost straight line. The nose is now less cambered and has a dorsal strake added.

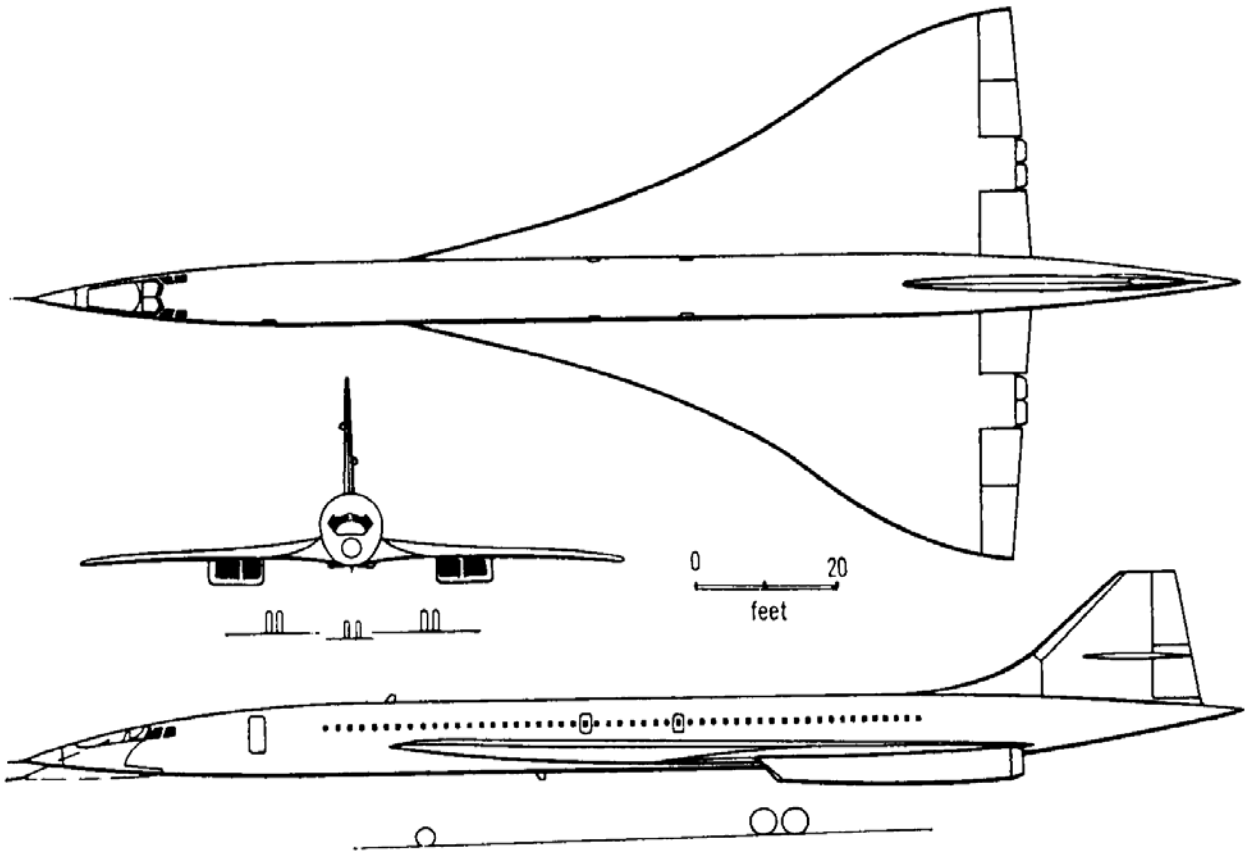

Fig. D.5 The Aerospatiale-BAe Concorde in final production form. Excessive nose camber, which caused drag in the cruise, was replaced by a nose which could be drooped for take-off and landing. Fin area was increased by the addition of a dorsal strake.

On entering service Concorde had an all-up weight of 326,000 lb, a maximum payload of 26,000 lb and seating for up to 146 passengers. The usable fuel capacity (with reduced payload) is 174,0001b. Using these figures, the maximum payload works out at around 8% and the maximum fuel load around 53% of the gross weight. The engines are four Bristol Siddeley Olympus 593 of 35,000 lb static thrust each. The thrust loading on take-off is, therefore, 2.33 lb/lb, which corresponds with a wing loading of 85 lb/ft^2.

The windscreen of the Concorde is covered with a retractable visor, and the nose forward of the windscreen is arranged to droop in order to give the pilots a less restricted view at low speed.

By comparison the SST shown in Fig. D.6 is the A-60 design study of the College of Aeronautics, Cranfield. The aircraft is broadly similar to Concorde, except that there is no separate fuselage, the passengers being housed inside the integrated wing-body. The cabin is formed by two cylinders, joined in a horizontal double-bubble. The engine-box houses six 18,000lb static thrust Olympus 591 engines in two rows, supplied with air from two-dimensional wedge intakes. The arrangement is very different from the twin underwing boxes of Concorde and rather similar to an early proposal by the STAC. It should be noted that a Russian SST project shown at the Paris Salon in 1965 was very similar to Concorde, but had the engines mounted in a long box beneath the fuselage, running the length of the centre-section.

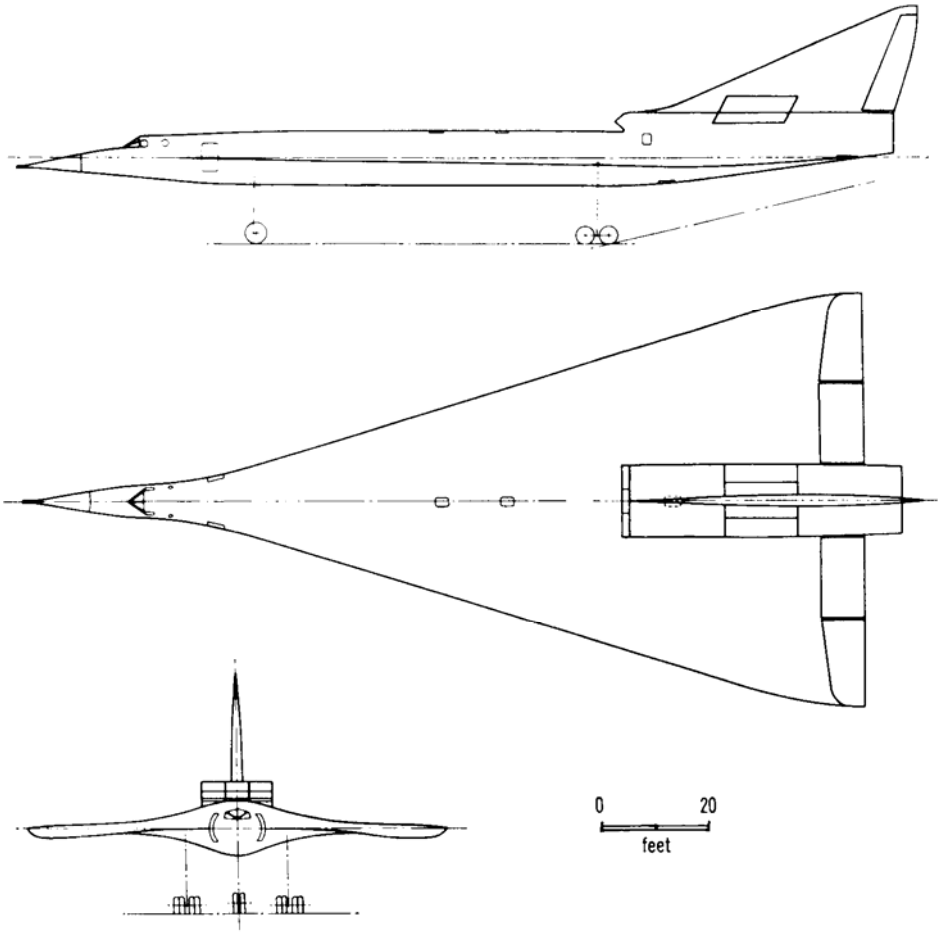

Fig. D.6 General arrangement of the M = 2.2 A-60 design study (College of Aeronautics, Cranfield, 1960).

The centre of gravity of the A-60 and Concorde will lie slightly forward of the leading pair of main wheels, about 8% of the wheelbase forward of the main leg. There is, therefore, a considerable side area ahead of the **CG**, in fact the centre of lateral area appears to lie forward of the estimated **CG**. This is a characteristic of high-speed aeroplanes which, for reasons of economy and **CG** position, cannot afford to carry heavy tail structures around with them. The natural weathercock stability must be augmented with artificial stability, using active controls. Yaw is sensed by a gyro-unit and compensatory signals are fed to the rudder, which is caused to deflect in the correct sense, augmenting the natural fin side force. Active controls can be used to achieve all forms of stability.

Both designs have markedly cambered leading edges to the wings and, although no wing sections have been drawn, the amount may be judged from the head-on views. The camber is introduced to improve off-design lift/drag.

It should be noted that, whereas the passengers in Concorde have windows, those in the A- 60 will have none. The provision of cutouts for windows increases the structure weight, and there is considerable argument in many quarters about the real advantages of letting passengers see that is going on.

D.5 M = 3 aeroplanes

Compared with the M = 2 SST there are many more problems to be met with the design of a M = 3 aircraft. Aluminium alloy can no longer be used in the high-temperature environment, and steel must be used extensively. The Barnes Wallis graph in Fig. D.4 shows that the design point must lie around 75,000 - 80,000 ft, and something has already been said of the hazards of flight at such altitudes. Nevertheless, M = 3 designs are being considered in the USA, simply because passengers associate higher speed with superiority of travel, even if they only gain 40min in a transatlantic journey.

Although the slender-delta wing is attractive aerodynamically and structurally, and has a large volume, for supersonic flight beyond about M = 2.4 it becomes extremely difficult to combine the amount of sweep needed to keep the wing leading edge subsonic with good low-speed properties. One particular difficulty is to provide enough elevator power to lift the nose on take-off: the useful lift coefficient is very low in any case and is further reduced by up-elevator.

A typical M = 3 SST is shown in Fig. D.7, the A-62 design study of the College of Aeronautics. The aircraft is directly comparable with the A-60 design, except for the higher cruising speed. Power is by four bypass engines of 30,000 lb static thrust, an increase of 66% over that required for flight at M = 2.2 with the same payload and range performance. It was estimated then that on a productivity basis an airline would be prepared to pay about £4 million for a M = 2.2 aircraft and £5.3 million for one of M = 3. The extra complication of the faster aircraft was estimated to make the M = 3 design at least 50% more expensive to produce and, if the M = 2.2 machine had cost £4 million, the faster one would have cost at least £6 million, making it an unprofitable proposition for an unsubsidized airline.

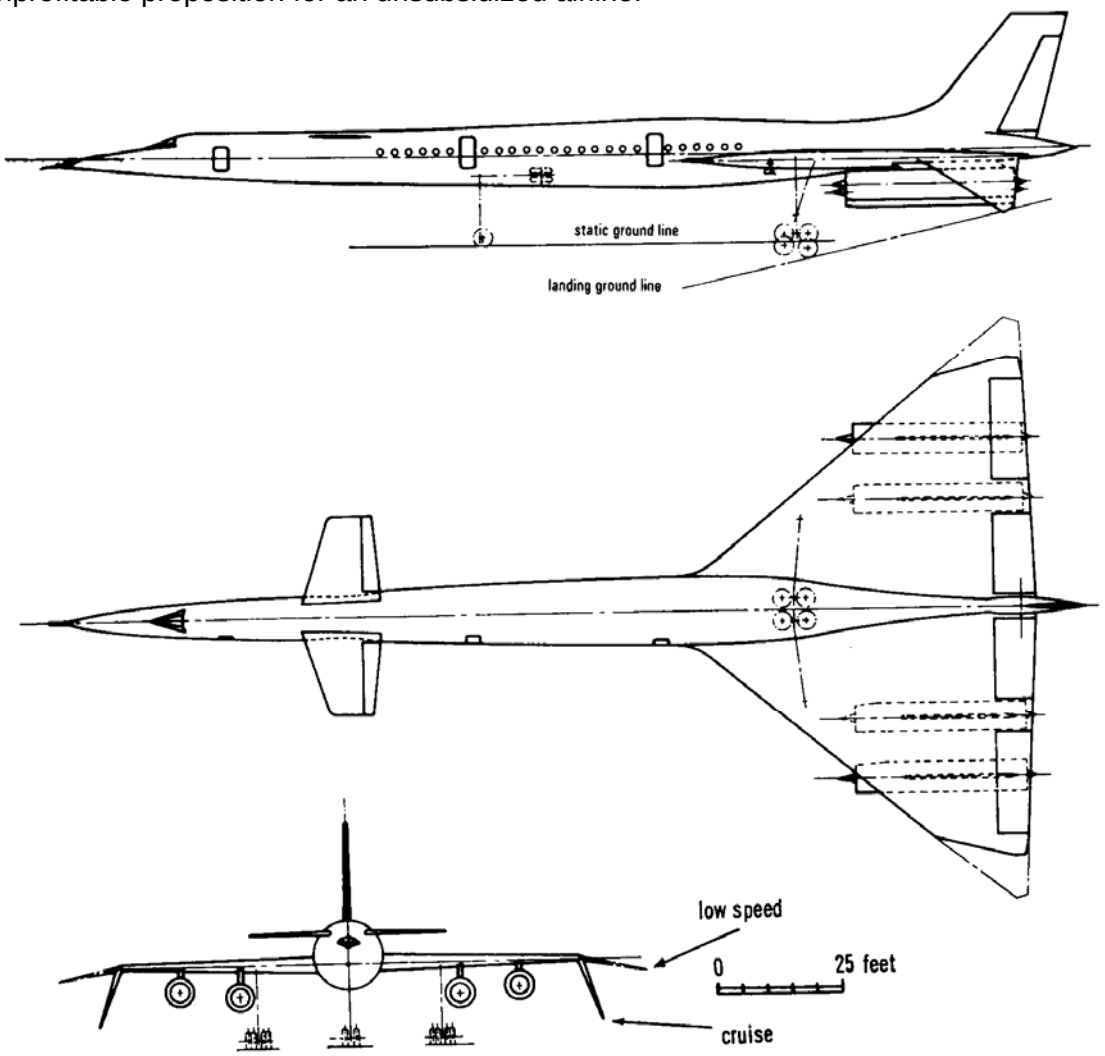

Fig. D.7 General arrangement of the M = 3 A-62 design study (College of Aeronautics, Crantleld, 1962).

The aircraft were both designed to carry 108 passengers over 3,250nm, the payload being 22,700lb. The all-up weight of the M = 2.2 aircraft was 325,000 lb compared with 390,350lb at M = 3. The structure weight of the faster (steel) aircraft worked out at 22.5%, compared with the 19.9% of the slower aluminium alloy SST. The payload of the M = 3 design was 5.7%, but that of the M = 2.2 aircraft 7%. One can see, therefore, how slender are the margins that must be worked to in weight control. The faster an aircraft is to fly, the more slender the margin for error.

Examination of Fig. D.7 shows how much further aft the **CG** might be estimated to lie. Apart from artificial directional stability the wing tips can be depressed in flight to improve the effective fin area.

Depressing the tips also compensates for the rearward movement of the aerodynamic centre at supersonic speed.

D.6 Other possible solutions

The future is full of possibilities. Three alternative solutions to the problem of designing satisfactory supersonic transports are shown here, to emphasize several different approaches. The three solutions are: the Barnes Wallis Swallow with a variable-sweep wing; a 'slewed-wing' design that is completely asymmetric; and a slender wingless' airliner employing a large number of lifting engines. All appeared in the period 1958 to 1961 and may well have been shelved completely in the forms in which they were first published. Yet the slewed-wing is the subject of NASA research because of its economic advantages, being only a little more expensive per seat mile at M = 2-0 than a wide-body airliner at high-subsonic speed.

It will be remembered that the supersonic drag consists of the lift-dependent vortex drag, the wave drag due to both lift and volume, and the drag due to skin friction. The vortex drag is decreased as the span of the wing is increased, while the wave drag terms are decreased as the length of the aircraft is increased fore and aft. As the skin friction drag is roughly proportional to the wetted area of the aircraft it follows that the minimum drag should be obtained by keeping the surface area to a minimum, and then rearranging it so that it occupies a 'box' of the greatest possible area, as defined by the length and span. The proportions of the box would depend, however, upon the actual constants in the drag equations. Three alternative supersonic layouts are shown in this way in Fig. D.8. The first represents the slender-delta already discussed. The second is the supersonic planform of Swallow-type aircraft. The third represents the slewed-wing. All have the same wetted area, roughly the same sweep, but the slewed-wing should, in theory, have the lowest cruising drag.

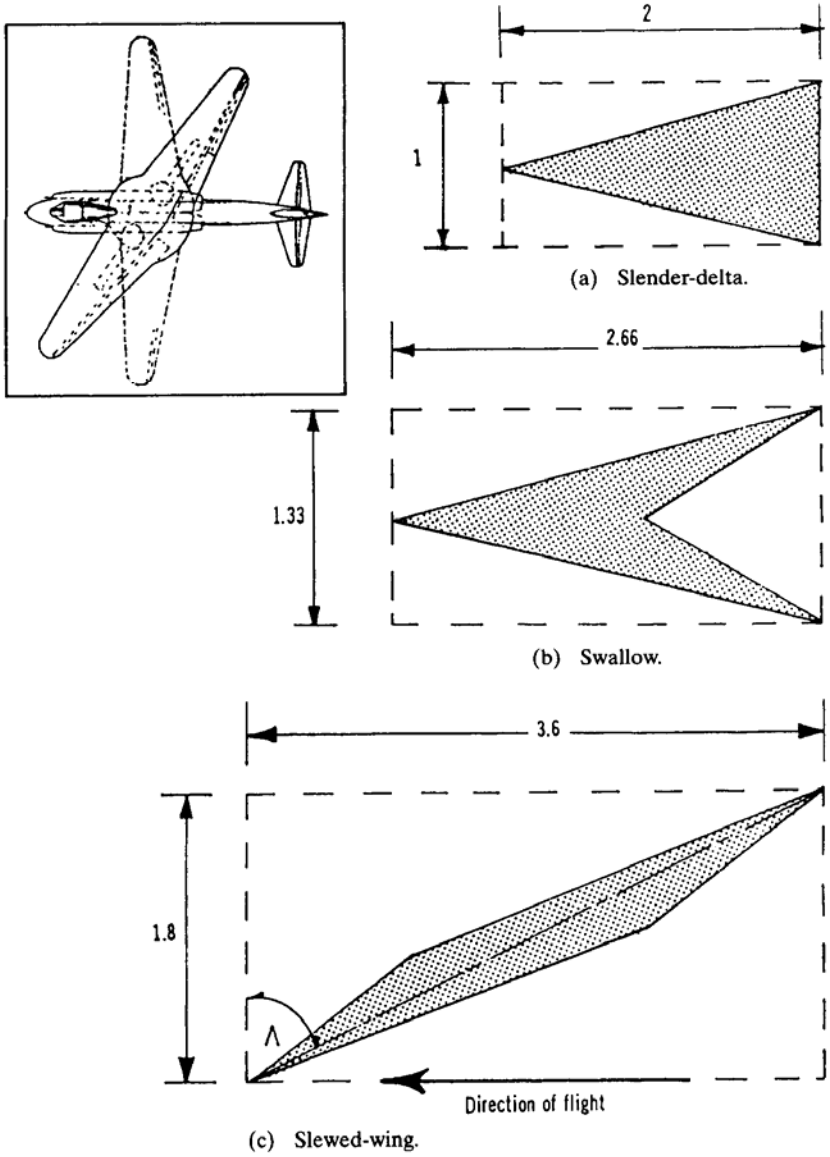

Fig. D.8 Three alternative supersonic planforms having the same wing area and comparable sweep, but occupying different space overall. Many apparently advanced concepts have their origins in work carried out during World War II. Inset is the planform of the Blohm und Voss P202 (1944) fighter, which was by then too late to fly. (Extract: published reprint of British Air Ministry Report A.1.2(g), No. 2383 (1946) German Aircraft, New and Projected Types.) NASA (Ames) flew the AD-1 oblique-wing research aircraft in 1979.

D.6.1 Early variable geometry (Barnes Wallis Swallow)

The Swallow project in Stage II of its development is shown in Fig. D.9. The aircraft did not represent the 100-seat SST version, which had a bigger discrete fuselage formed by a slender solid of revolution. In the drawing the pure aerodynamic shape is most clearly seen. The aircraft was by no means definitive but was representative of a wide range of Swallow aircraft.

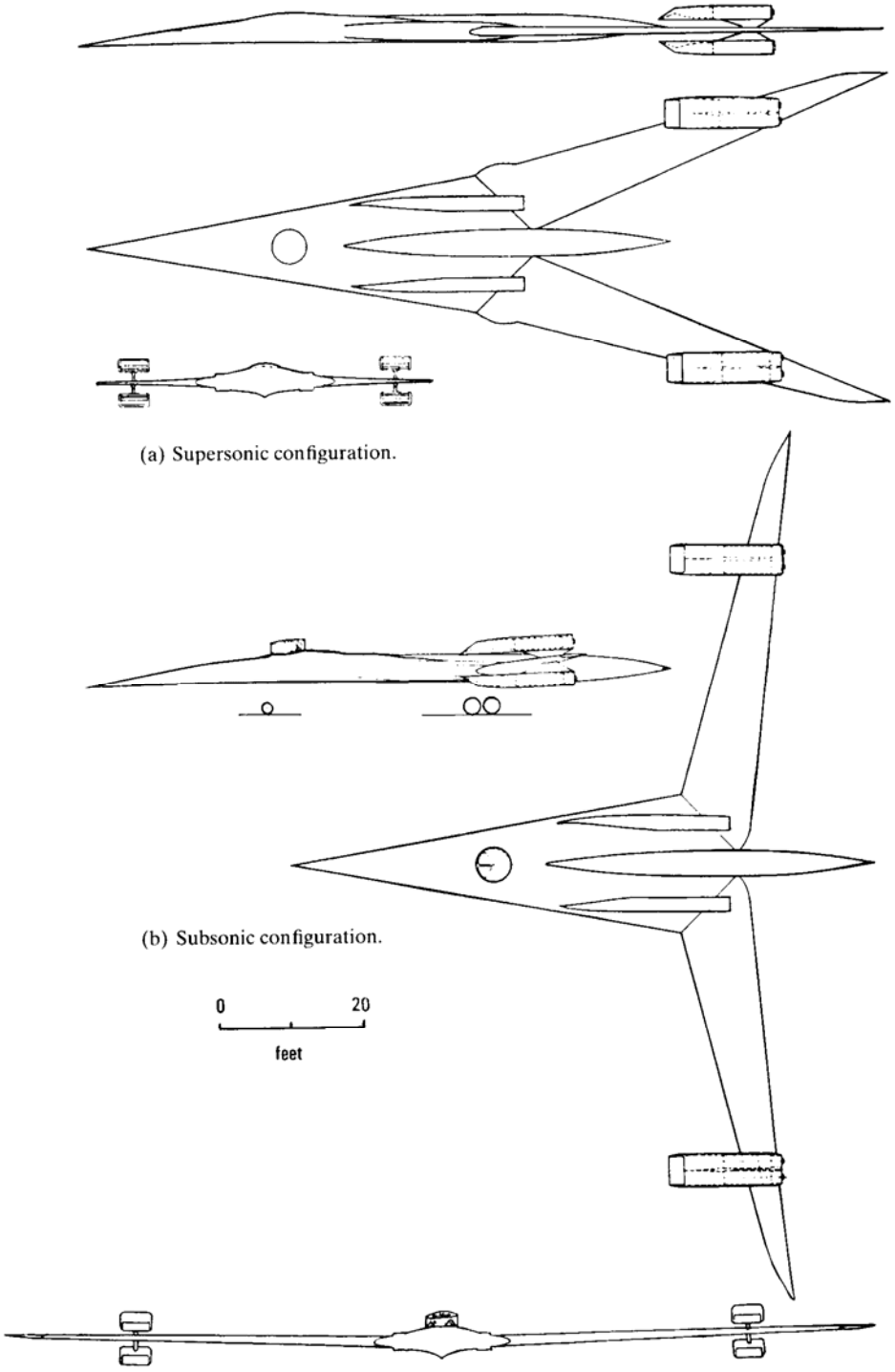

Fig. D.9 The Barnes Wallis Swallow, Development Stage II, about 1960.

The argument for the Swallow wing shape is the same as for the slender-delta - that the lifting surface lies within the Mach cone - except that the part of the wing that is cut away makes no contribution to the lift and a lot to the drag caused by separated flow. The aircraft could not land with the supersonic shape, because the undercarriage would have to be impracticably long to achieve a useful angle of attack. Therefore variable sweep was used, and the resulting shape was such that the aircraft would probably chase its M_{crit} as the value rose with increasing sweepback.

The engines were placed outboard, where they made a contribution to the static balance. As they were hinged, they could be used for stability and control in place of aerodynamic surfaces. The version shown had a retractable cockpit.

It was claimed that a supersonic aeroplane of this type would have a wing loading of around 40 lb/ft^2, reversing the trend towards values of 100 lb/ft^2, and it would take off in a few hundred yards at 85-90k. A 60-passenger airliner, expected to weigh 100,000 lb, would have had a spread span of 130 ft, and a similar length with the wings swept. The most controversial claim reported for the design was that it would be possible to operate 'a daily return service to Australia with one Swallow - flying time for the return flight would be about 10 hours'.

D.6.2 Slewed (yawed) -wing (Handley Page and NASA)

The proposal for a slewed-wing aircraft was worked on by Robert T. Jones of NASA and Godfrey Lee of Handley Page and published in 1961, but as far as is known the design did not then progress beyond that shown in Fig. D.10.

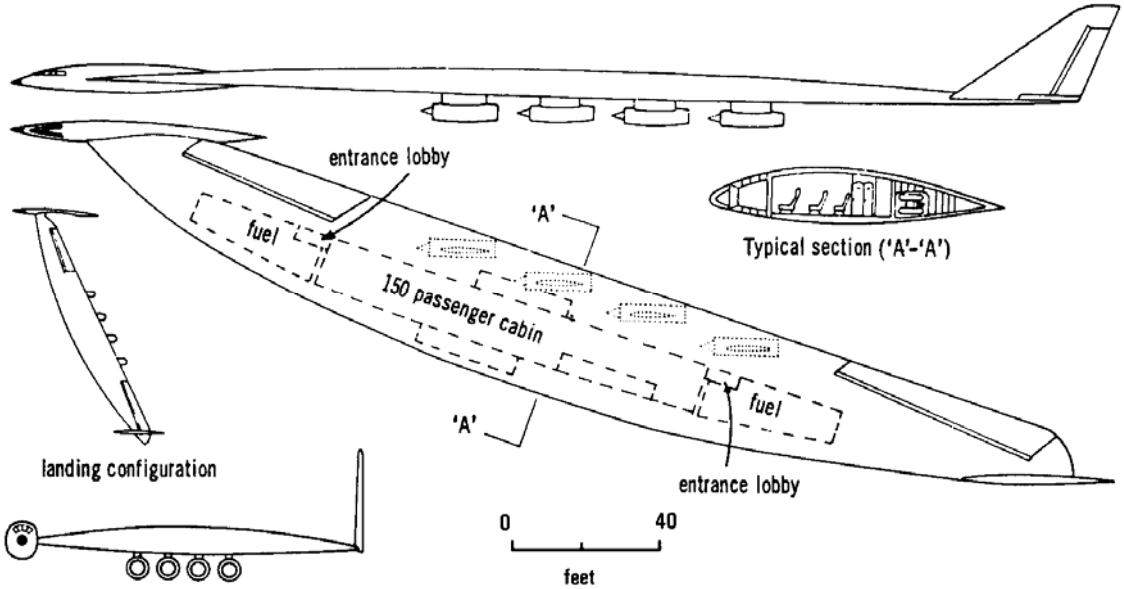

Fig. D.10 Handley Page slewed-wing proposal (about 1961).

The slew angle at which such a wing would fly is determined by the setting of the fin and rudder relative to the wing. The variable sweep mechanism would be considerable, involving simultaneous rotation of four engines, a crew nacelle and the fin and rudder. It is claimed that as the wing is supported on an ideal 'air-bearing', the structure is of minimum weight.

The slewed-wing is reported to have a theoretical lift/drag 10-20% better than a slender-delta, requiring 10-20% less fuel for the same payload and range. Calculations are said to show that for two M = 2 aircraft having an all-up weight of about 350,000 lb, the slewed-wing would require about 24,000 lb less fuel (using 50% when cruising and 50% subsonically), which is approximately equal to the weight of the 120 passengers carried in the slender-delta wing. Like the all-wing subsonic transport, there is a certain minimum size below which it is impossible to provide adequate headroom.

Successful flight tests with models and a small, manned research aeroplane suggest that slewed-wing aircraft are possible. A difficulty lies in the cross-coupling of the three stabilities, particularly the longitudinal and lateral modes. Such an aircraft will not be able to make a straight stall, for loss of lift will be accompanied by roll, and corrective action could well aggravate matters.

(picture)
Plate D-2 NASA stewed-wing research project at large angle of attack, showing behavior of wool tufts at low airspeeds.

D.6.3 Powered lift (Griffith Airliner)

A VTOL proposal by Dr A. A. Griffith was a slender-delta project for flight at M = 2.6 (Fig. D.11).

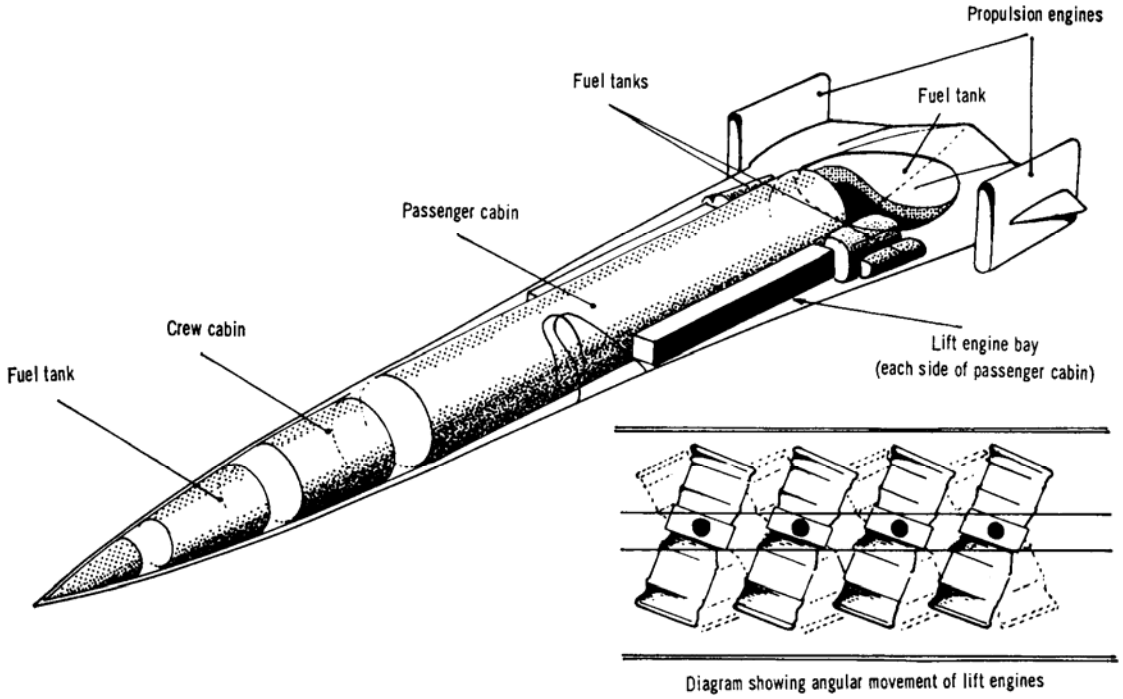

Fig. D.11 The Griffith conception of a possible long-range SST (about 1958).

Flight at low speed would be by a large number of lifting engines, which would give the aircraft VTOL capability. It was reported that jet-lift thrust was estimated by Rolls-Royce at 10-15% above all-up weight, but some authorities favored something more like 25% to meet the critical crosswind take-off case, when acceleration away from the ground must be as high as possible. Yet others favored considerably less than 12-5%. The situation was far from clear, but calculations showed that probably more than 50 lifting engines would be required for a transatlantic SST.

Momentum drag of the lifting engines would have been high. Flight planning and timing would have had to be impeccable. The lift engines would have to start unfailingly and almost simultaneously, for it is said that they would burn up to something like one-thirtieth of the all-up weight every minute.

Appendix E Strike and Reconnaissance Aeroplanes

In the decade or so following World War II, there were still distinctive aircraft for high-altitude interception, ground attack, fighter/reconnaissance, medium and heavy bombing, and high-altitude reconnaissance. Today the distinguishing features are heavily blurred by the need for economy. An aircraft is designed to carry out a number of roles: night/all-weather fighting, fighter/strike, fighter/recce, tactical strike/reconnaissance, strategic bombing and reconnaissance. Even then it is hard to draw firm distinctions every time. Aircraft little larger than twin-engined, two-seat all-weather fighters now carry smart weapons or strategic nuclear weapons and are designed to make their final attack a little above the tree tops.

The large, long-range strategic bomber (or converted long-haul civil airliner) becomes a military tanker converted for in-flight refueling of fighter/strike aeroplanes, striding intercontinental distances to reinforce operations in out of the way corners of the globe. In the UK, for example, Strike Command of the Royal Air Force must now provide 'instant air defence' for allies overseas, in addition to the time-honoured task of defending the British Isles. When deployed, air-defence aircraft may be used for ground attack in support of troops and for reconnaissance, in addition to their original defensive role.

The maritime reconnaissance aeroplane may also embrace several new roles. There are similarities in size and shape between the long-range and endurance subsonic maritime aircraft, and the long-range subsonic passenger or freight-carrying transport. The BAe Nimrod is a maritime version of what was once the first-in-the-field De Havilland Comet jet airliner. Experimental work on the Comet was later carried out at RAE Farnborough, which contributed to development of the Nimrod and its variants.

Similarly, the Russian Tupolev Tu-95, which first flew in 1955, was large and fast and was given the NATO codename 'Bear'. It went on to generate a family of Bears, A to J (omitting I) which, by Bear F, had developed sufficiently to became the Tu-142. The aircraft has the most powerful turboprop engines in the world, four Kuznetsov NK-12s, fitted with contra-props. Unusually for a propeller-driven aeroplane it has wings swept back 37^0 inboard and 35^0 outboard, and has a cruising speed around M = 0.8. Long range enabled it to meet the Russian requirement to support her submarine fleets, with a fast naval strike reconnaissance presence over oceans made distant by a lack of warm-water ports.

The high-flying reconnaissance aeroplane (marked by the Lockheed U-2 and the YF-12A, both of which are products of Kelly Johnson's Lockheed 'Skunk Works') have taken on other roles. The Lockheed

YF-12A (Fig. 8.18) was a two-seat interceptor version of the original A11, designed for strategic reconnaissance. The reconnaissance version of the basic A-11, the SR-71, differs from the fighter primarily in having a large ventral mission-pod. All three aeroplanes have similar aerodynamics, structures and propulsion systems.

E.1 The basic military problem

The first difference between military and civil aircraft is that, historically, military machines must be able to stand up to more punishment than civil, without falling apart. Great care must be lavished upon the basic design of every piece of engine, airframe and equipment. However, one constantly comes up against the contrary effect of 'Murphy's Law': that if a piece of equipment can be assembled or installed wrongly, then eventually someone will do so. Design for ruggedness, simplicity and reliability, all essential in military machines, is often hampered by the resulting ability to assemble wrongly. Whereas thousands of pounds may be saved in the production cost of one interchangeable item, several million pounds may be lost with an aircraft and crew, simply because the item was made interchangeable and something was installed the wrong way round. A typical example is the use of a common plug for each end of a piece of electrical equipment.

The second difference is that military aeroplanes tend to have lower thrust and power loadings than aerodynamically comparable civil aircraft because high performance (especially maneuverability) is a necessity; this is shown in Fig. E.1. The curves are based upon information published in the aeronautical press and represent state-of-the-art boundaries within which most aircraft appear to lie. The supersonic transport and the supersonic bomber mark the most noticeable break with the traditionally higher thrust loading of the civil aircraft.

Military development has led civil development for a great number of years, largely because of the need to make the bomber outstrip the fighter, and the fighter catch any bomber. There was a period, just before World War II when civil transports became monoplanes while many bombers and fighters remained biplanes, when the civil machine led the military in performance, but it was short-lived. Many recent developments in the civil field are the result of 'spin-off' from military programs, and something has been said of this already.

(picture)
Plate E-1 With changes in shape and stretching, the Dc Havilland Comet is historic. (a) An experimental Comet at the then Royal Aircraft Establishment, Farnborough, which apart from equipment, forebody pannier and dorsal fin, still resembled how it looked when it flew as the world's first airliner, in 1949. (b) The much altered Airborne Early Warning (AEW3) BAe Nimrod, the potential of which was not realized because of its radar equipment. (c) The Maritime Reconnaissance Nimrod MR2 is the basis for the modified and advanced Nimrod 2000 (Fig. E.11), which has a much larger wing, among other significant changes.

Plate E-2 Also for maritime reconnaissance, the Russian Tupolev Tu-95 (NATO codename Bear, intercepted on an intelligence-gathering mission by a Lightning of the Royal Air Force, from a UK base). The combination of the swept wing and tail surfaces of the Tu-95 and the Kuznetsov NK-12, the most powerful contra-turboprop engine in the world, gave the aeroplane high speed and an unrefueled combat range approaching 9,000nm.

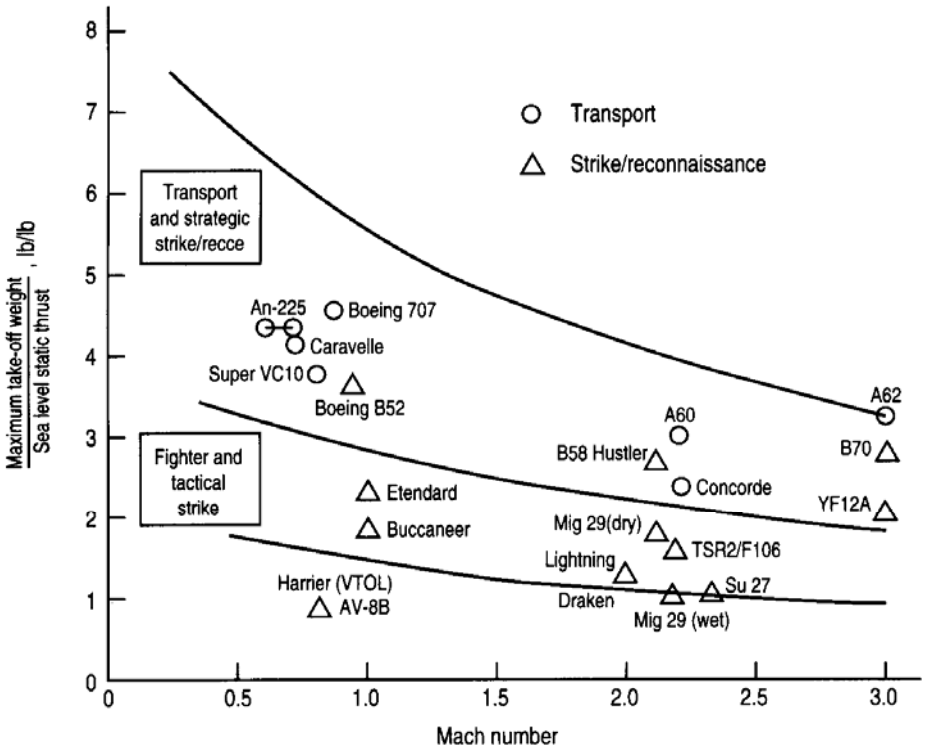

(a) Take-off thrust loading.

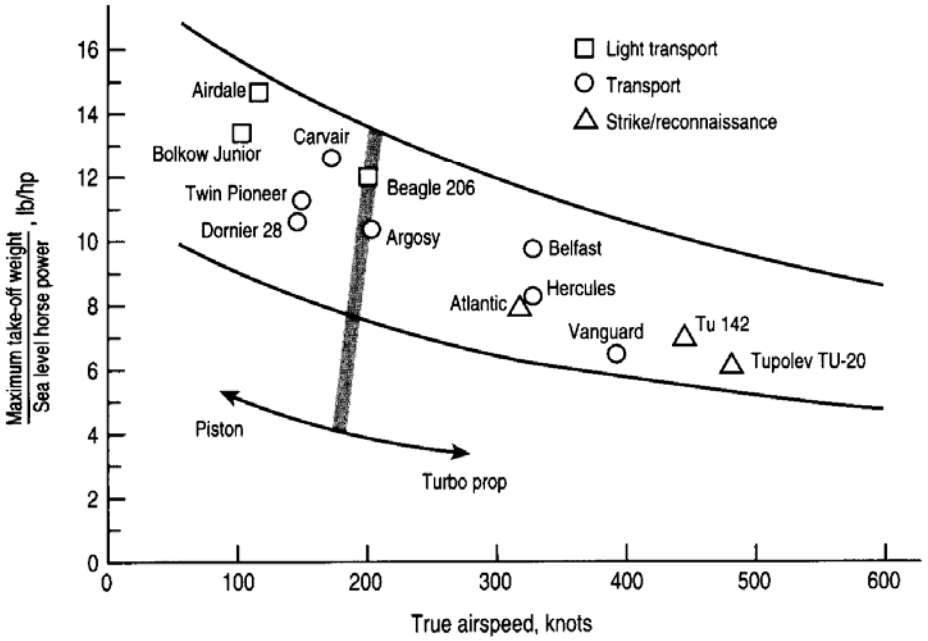

(b) Take-off power loading.

Fig. E.1 Estimated state-of-the-art thrust and power loadings.

E.2 Fighter strike/reconnaissance

The original concept of the fighter aeroplane was that of an aircraft that could be used for intercepting enemy raiders and for dog-fighting with enemy fighters. The first specialization of role was the development of 'Interceptor' fighters, designed for the sole purpose of destroying enemy bombers. Then came the use of fighters for ground-attack work, using guns and rockets, and it was then only a short step to the fighter/strike aeroplane carrying bombs and the fighter/ reconnaissance machine carrying cameras and specially trained sharp-eyed pilots. The distinction between interceptor and fighter is academic: interceptors are specialized fighters. The essential difference lies only in the role. The interceptor is a fighter with a particularly fast climb, insufficient fuel to go anywhere, and no low-level performance. The ordinary fighter climbs more slowly, because it must carry additional fuel in overload tanks ('jugs') to be able to loiter, or fly for longer distances to its quarry. The additional fuel capacity gives it a low-level performance.

The minimum rate of climb specified for an interceptor fighter is governed by the speed and altitude of

the target and the amount of warning time available. A diagram of the airspace swept out by the radar scanner shows in section as a lobe. The greatest line of sight range is at altitude, which reduces as one descends until, at a few hundred feet, radar can see only a fraction of the distance. This characteristic of radar led to the development of aircraft and tactics capable of flying 'under the radar screen' and 'in the nap of the Earth'. Couple with this the development of stealth technology and an aeroplane is past before it can be acquired by a defensive weapon system, if indeed it is seen at all.

With the ending of the Cold War, the global threat it posed and the regular operation of reconnaissance satellites, the balance of power in the world shifted dramatically. The long-range, high-altitude bomber, carrying a heavy weapon load, has either been broken up or relegated to tanker duties. One relatively small precision weapon, carried within range of the target by a two-seat interceptor-sized aircraft, and then guided to its target by laser can achieve a more effective result than a carpet of bombs from 10 former heavy bombers. The paramount need is for the modern fighter to have sufficient speed and agility, the reach to go anywhere (with in-flight refueling), and lethality when it delivers what may be a one-shot weapon.

Because of high cost, the same fighter aircraft has multi-role capability: interception with missiles, backed up with cannon; strike using smart and/or laser-guided bombs or missiles; and reconnaissance. Stealth is a necessity. No longer is a powered airframe with guns and a pilot sufficient, except as a long-stop. A crew of two is more the rule than the exception. The aircraft now being shaped are for rapid deployment, with good repairability and maintainability, for operations in often remote 'brush-fire' wars, operating at high and low altitudes against other aircraft and ground targets.

Agility is of the essence, with the ability to carry out super-maneuvers in excess of 90^0 angle of attack, without risk of an uncommanded, uncontrolled departure. In a tail chase, the ability to point the aeroplane and fire an optically guided or heat-seeking fire-and-forget missile across the diameter of the turning circle, saves time and fuel. Thrust-vectoring is more effective for super-maneuvering than by means of aerodynamic controls alone.

The agility which it is now possible to build into a basically unstable aeroplane can put any human pilot beyond his physical and mental limits. Already there is the intention to fight aerial combat and attack modes with no human pilot on board. He (or she) will be on the ground, exercising electronic control from a command position in a bunker.

Until that time comes, every aspect of combat performance involves total integration of the items making up the whole weapon system. The term weapon system includes the aeroplane, airframe, crew, engine, avionics, armament, training and other equipment, including specialized tools. Design, construction and equipping of the weapon system are brought together under a project manager.

Of these items the mass of the avionics pack has grown dramatically. Over the past 25 years its weight has nearly doubled, from around 2.5% to 4% of the take-off weight, while adding up to about half the total cost of the aircraft. A mix of weapons is also needed if the aircraft and pilot are to survive to fight at another time and place of their choosing.

Although a single engine is favored for the planned Joint Strike Fighter (JSF) in the USA and Europe, it has disadvantages for survivability in deep penetration operations. This program concentrates upon multi-role, the same aircraft being used for air-to-air or air-to-ground, with only the selection of weapons marking the difference. Cheapness and maintainability are required, which is a good reason for wanting only a single engine. The debate is not yet resolved as this is written.

For such aircraft the engine(s) must be powerful, to provide supersonic supercruise ability without recourse to reheat. Not that reheat is rejected. The point was made earlier that the bypass fan engine is capable of providing more reheat thrust at altitude than the non-bypass turbojet, in use when this book was originally published. The performance of any missile is enhanced by the added kinetic energy at launch. The engine(s), being matched to a supercruise design point, then have optimized fuel consumption and the aircraft a larger radius of action at combat speed. The combination of such supercruise performance with stealth enhances survivability by reducing the firing envelope of a hostile surface-air missile (SAM).

The requirement for supercruise also ensures a high rate of climb. To obtain a high rate of climb we saw in Eqn (4-4) that (F - D)V/W should be large with an engine having substantial air-swallowing ability. The straight turbojet is thirsty and high-altitude interceptors, propelled by such engines with high specific fuel consumptions were always notoriously short of fuel. Faired hard points for weapons and/or detachable overload fuel tanks mounted externally remain a standard item of equipment. For high performance, drag and weight are cut to a minimum. The result is that either one large or two smaller engines are mounted in semi-external engine-box nacelles, or are stowed inside a fuselage which also houses the crew and weapon system. The aim, more than with any other aircraft, is to dispose as much of the aeroplane as possible within the minimum frontal area, while providing the engines with a little hindered air supply, all shaped for stealth.

Supersonic fighters are made as long and slender as possible, to reduce wave drag to the minimum, while keeping vortex drag low. This means that wing spans are short and span loadings high. To keep wing loading low for performance at altitude one needs wing area. The geometric trend is towards planforms in which the combination of body and lifting surface areas merge by fairing into less discrete planforms than has

been the practice in past generations. The result resembles a body which forms increasingly a streamlined lifting surface, into which wing and stabilizer appendages are faired. The aspect ratio of the whole is low (see Figs 8.18 and 8.23).

Equation (6-16) showed how the planform and span loadings are related. The magnitude of K when greater than 1.0 (which value corresponds with ideal elliptic span loading) is a measure of planform inefficiency, as was pointed out after Eqn (6-5). Swept thin wings have lower planform efficiency, and larger values of K, than straight relatively thick wings with the same aspect ratio. A straight wing with a 7% thick section and an aspect ratio of 2 has a value of K of about 1.12, compared with a value of 1.48 for a wing with the same thickness ratio and aspect ratio, but with 45^0 to the quarter-chord line. Remember that the higher the value of K, the larger the lift-dependent (vortex) drag. The swept wing generates about one-third more lift-dependent drag than the unswept wing at the same lift coefficient; but the wave drag is much lower.

It is possible to reduce K considerably by means of camber and twist if the aircraft is to cruise for long periods at one design point. The long-range reconnaissance aeroplane and the heavy bomber can be so treated, but fighters cannot, because they must be free to operate almost anywhere in the design envelope, unconstrained by a design point; it is demanding operationally. To offset the inevitable inefficiency implied by a large value of K, the span loading (W/b) must be kept low, because the lower the span loading, the larger the residual C_L available for maneuvering.

The word 'low' is purely relative within each generation. An aeroplane with a C_{Lmax} around 0.8, a wing loading of 50 lb/ft^2 and a span loading of 500 lb/ft will stall in 1.0g flight at M = 0.58 at sea level and M = 1.08 at 70,000 ft in the standard atmosphere. The changes in fighter design, ushered in by new and advanced technologies, dramatically alter the picture of span loading in the latest generation of aircraft. Whereas in the 1960s we were saying that fighter span loadings should be no greater than 600 to 650 lb/ft to maneuver at high altitude, 30 years later and operating regularly at supersonic speeds against supersonic targets, span loadings now approach, or exceed by a margin, 1,000 lb/ft.

All is made possible by low aspect ratio, aerodynamically thin wings of relatively large planform area, capable of augmenting lift by means of separated lifting vortices. Powerful modern engines provide lower thrust loadings (weight/thrust) and advanced structural materials and techniques. Figure E.1(a) shows how M > 2.0 aircraft increasingly now cluster around the lower boundary of a figure plotted originally for an earlier generation of military aircraft.

Most fighter aircraft are fitted with overload fuel tanks which enable them to carry a further 2,000 to 3,000 lb externally. The original idea of the overload fuel tank was that of a cheap container that could be dropped when empty, leaving the clean fighter free to operate in a low-drag condition with full internal fuel. Overload tanks are rarely jettisoned, except in time of war, and have become standard equipment everywhere. Within the present state-of-the-art 2,000 to 3,000 lb of additional fuel enables the range to be increased by perhaps 200 to 300nm at altitude, but to only half that at sea level. Overload tanks reduce maneuverability and reduce structural reserve factors to a certain extent.

Stowage volume is at a premium inside fighter aeroplanes, and there is an increasing tendency to carry guns (as well as missiles) externally. Missiles of the guided and homing variety are merely suspended on pylons, but guns and unguided rockets are carried in pods. Some very high performance interceptors carry their missiles internally, in weapon bays. In the strike role small nuclear weapons can be carried on pylons in place of missiles.

Modification of a basic fighter for the reconnaissance role usually involves an alteration of shape to the nose, to allow for camera stowage. Cameras and other equipment may also be carried in pods.

Control deflections and forces are large, and such aircraft have fully powered flying controls. Fins and tailplanes (used differentially) may be employed for lateral control in place of ailerons. Wings and tail surfaces are so thin that it is difficult to stow control surface operating jacks within a profile, and large streamlined fairings are usually seen with conventional trailing-edge surfaces. In a number of cases tail surfaces are moved as complete slabs, without recourse to flap-like appendages. Control forces, feel, and stability characteristics are built into the systems artificially.

E.2.1 Variable-sweep interceptor

In 1951 the Air Staff in the Ministry of Defence were concerned about the threat from very high flying aircraft. With World War II German experience in mind and the support of the Royal Aircraft Establishment, the solution appeared to be the rocket-propelled fighter. By 1952 tenders were sought from selected British aircraft manufacturers to satisfy Operational Requirement 301, which called for a single-seat rocket-propelled interceptor, production versions of which were to enter service 3 years later.

The aircraft shown in Fig. E.2 was a theoretical project study to examine broadly the factors involved in producing an interceptor with an outstanding rate of climb and high speed at altitude. The aim was to reach any of the bomber and reconnaissance aircraft then known to be in operation. Fighters did not always have to

fight. Work in peacetime involved interceptions for the purpose of 'being seen to be there', investigating unknown traces on radar screens, and being 'scrambled' into the Air Defence Identification Zone, or ADIZ, to test the reaction time of the opposition. It was reasoned that the aeroplane also needed a loiter capability, which meant two engines: one a turbojet - later a bypass - the other a rocket.

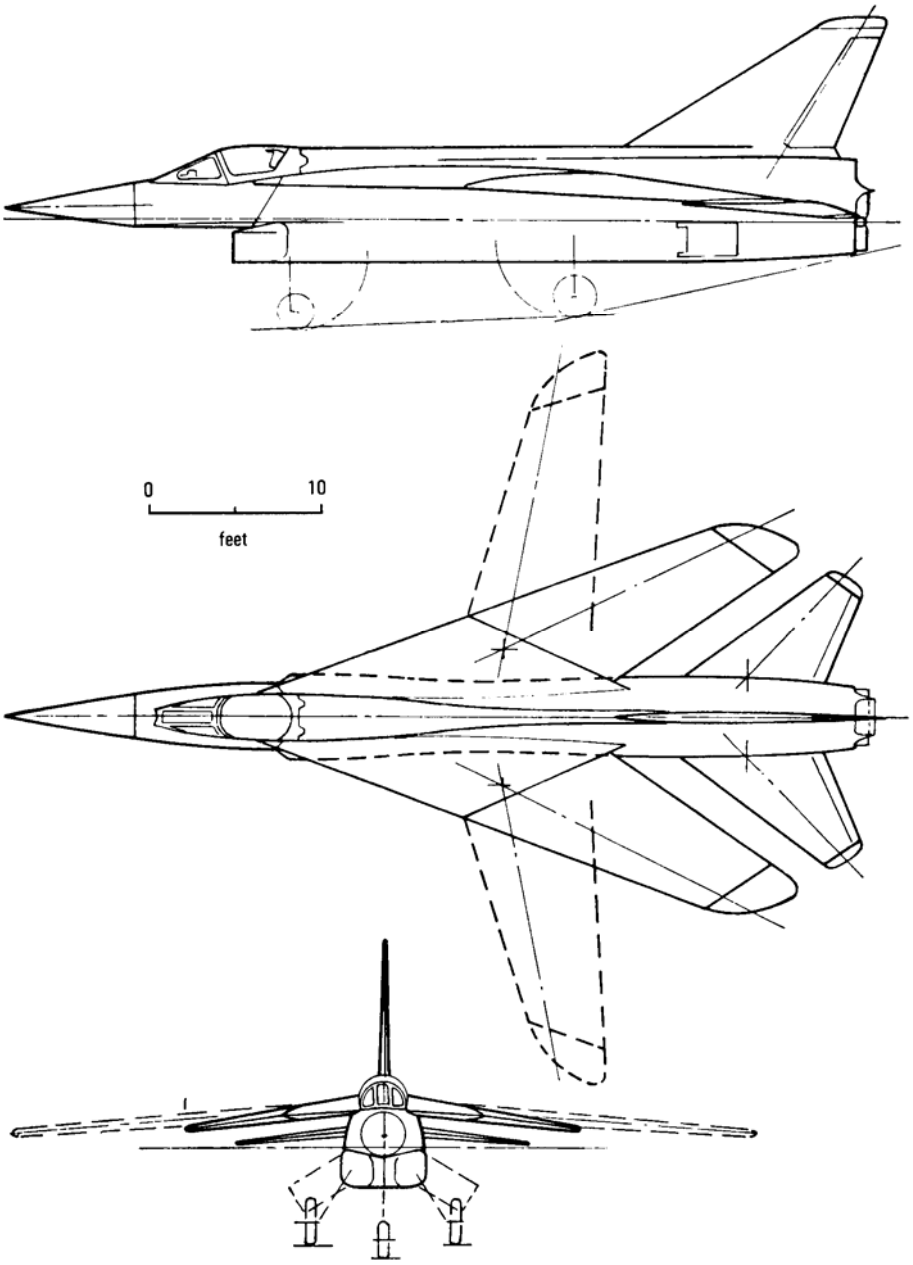

Fig. E.2 Variable-sweep fighter (bypass engine plus rocket).

The aircraft was planned to carry 2 missiles, together weighing some 1,200 lb, mounted externally on separate pylons. The top speed was to be M = 2.2 at the tropopause and the ceiling a little over 60,000ft. Around 70,000ft air-breathing combustion cannot be maintained with certainty through lack of oxygen. The rocket motor was capable of taking over and providing a rate of climb in excess of 30,000ft/min, enabling the aeroplane to reach and maneuver to an extent at altitudes in excess of 90,000ft. On the descent through 70,000ft a high-energy ignition system was needed to ensure a relight of the main engine.

The principal disadvantage of the design was that insufficient fuel could be carried to make the tactical radius of action worth while. Bombers were beginning to carry stand-off weapons that could be launched hundreds of miles from their targets, and the aircraft was essentially a target-defence interceptor. Furthermore, the fuel consumption was so high at low altitude that an excessive number of machines would have been needed to achieve a reasonable probability of catching a fast low-level bomber. Long-range reinforcement was out of the question without large overload tanks and critically reduced take-off performance.

In its present form the aircraft has been reshaped around a larger bypass engine and fitted with a variable geometry wing. The rocket motor can still be fitted in the upper part of the rear fuselage, alternatively it could be replaced by fuel for the turbofan. The wing had to be moved from a mid position to the top of the fuselage, to clear the engine and ducting when fully swept. The dihedral effect was then excessive and both wing and tailplane were given anhedral to prevent 'Dutch-roll' at high altitude, and during the approach to landing. The undercarriage could not be retracted into the wing, but required the design of a complicated

geometry to allow stowage in the fuselage without excessive interference with fuel tanks and ducting.

The engine has reheat, but a thrust sfc about 20% better than the previous turbojet. The most marked improvement in efficiency has come with the variable-sweep wing. Simple trailing-edge flaps are fitted, but no ailerons, and the wing (including flaps) is a complete fuel tank. Hinge design is somewhat complicated by the need for fuel and hydraulic lines to run almost through the same point. The tailplane consists of two tailerons, which together form ailerons and elevators.

The aircraft is, aerodynamically, a high-winged delta. The rear portion of the centre-section, which contributes little to the lift and much to the drag, has been cut away and lowered to a position well clear of the wing-wake, where it can work as a stabilizer. The stabilizers (tailerons) could have been lowered further, but they have been placed in a mid position where jettisoned missiles will clear them, and where there is ample room between jet-pipe and skin for mountings and mechanisms.

It was originally intended to provide the pilot with a complete cockpit capsule and parachute that could be rocket-boosted away from the aeroplane in an emergency. An ejection seat was finally selected as being simpler, lighter and more reliable. To save space, high-order (FBW) controls are used, side-stick and rudder-pedal deflection varying the electrical signal sent to the power control system.

The air intake has a central, variable-angle wedge for establishing the optimum pressure recovery. The nosewheel unit retracts into the structure behind the wedge. A ventral fuel tank can be fitted.

In its present form the range of the aeroplane has been increased by 64%, and the overload ferry range is about 1,300 nm. The machine is small, however, and lacks much development potential. As an interceptor the dry thrust loading with turbojet alone is about 1.5 lb/lb, and 1.1 lb/lb wet. With rocket and reheat together the thrust loading on take-off is about 0.86 lb/lb, in other words, if the aeroplane could be stood on its tail, it would go straight up. The wing loading is 50 lb/ft^2 with the wings spread, and the span loading 405 lb/ft. With the wings fully swept the equivalent figures are 56 lb/ft^2 and 770 lb/ft.

It is doubtful if such a small aeroplane will ever again be of much use in the present world. The trend is towards bigger, multi-crew aircraft carrying heavy electronic equipment, capable of flying long ranges and carrying out more than one role. A fighter such as that shown lacks utility and is too complicated and costly for what it can do. Heavy weight for small dimensions would destroy agility, ruggedness and flexibility, without thrust-vectoring.

E.2.2 Experimental aircraft for agile, stealth research

When the aircraft in Section E.2.1 was conceived the emphasis was on fast-climbing to reach high-flying targets. Suggestions began to be made in military circles that perhaps one should ignore aircraft which penetrated sovereign airspace above a certain (as yet undefined) altitude, because of the effort and cost involved in attempting to reach them. After all, one could not and would not do anything to counter reconnaissance satellites? The response was: 'OK, then what altitude do you suggest, above which you are going to let them through (with or without nuclear weapons)?'. It was realized, of course, that as long as a threat existed, then ignoring it left the nation open to airborne nuclear, chemical or biological blackmail. There had to be interceptor fighters being seen to be there, and if one had fighters, they had to deal effectively with other fighters. *Surprise* is a Principle of War, enunciated by Karl von Clausewitz (1780-1831), a Prussian staff officer when Napoleon and his French army were roaming Europe, encouraging use of the metric system. Surprise has the elements of *secrecy*, *concealment*, *deception*, *originality*, *audacity* and *speed*, the first three of which are also elements of stealth. To achieve surprise a low-observable fighter is one which can exploit stealth to advantage.

To outfight one's opponent demands agility, to get one's blow in first. To that end the 'Cobra' maneuver that was demonstrated in April 1989 by the Russian test pilot, Viktor Pugachev, for Sukhoi in a T10-U1 aircraft fitted with anti-spin parachute and anti-spin rockets, is an effective way of doing that. The maneuver, which employed 'dynamic angle-of-attack maximum entry', also called 'dynamic braking', involves pitching up to an angle of attack around 120^0. A high thrust/weight ratio then bestows rapid acceleration after braking. The purpose of the maneuver was to enhance the maneuverability of the Sukhoi Su-27. Since then the maneuver has been demonstrated using the MiG-29 and explored experimentally in other aircraft. The Rockwell/DASA X-31A demonstrated exceptional post-stall maneuverability at the Paris Salon of 1995, using thrust-vectoring (together with a small delta-canard foreplane), to increase deceleration and negative g, and also to improve fuselage pointing ability - all maneuvers which enhance the effectiveness of deflection shooting with missiles, both self-homing and ballistic.

The aircraft shown in Fig. E.3 is a reduced-scale experimental project study for concept demonstration (a technology demonstrator), in which features are combined to provide both stealth and agility. It is shaped to present a small radar cross-section, and conceived around a 16,000 lbf st turbofan engine. The requirements are demanding and it might be impossible to satisfy both without excessive compromise. Costs must be kept low, and the aircraft cannot be large, yet it must not be too small as this would limit its utility for further modifications. These modifications might include at a later date the fitting of a remote augmentation

powered-lift system, for advanced short take-off and vertical landing (ASTOVL). Its present purpose is to find areas of possible conflict between technical features needed for stealth and for agility. The configuration of the demonstrator broadly resembles a proposed single-engined fighter and beyond that the possibility of a twin-engined strike variant, for deep penetration into an opponent's territory. The demonstrator, being experimental, does not have the provision for in-flight refueling or weapons required by the others. The features required are discussed below.

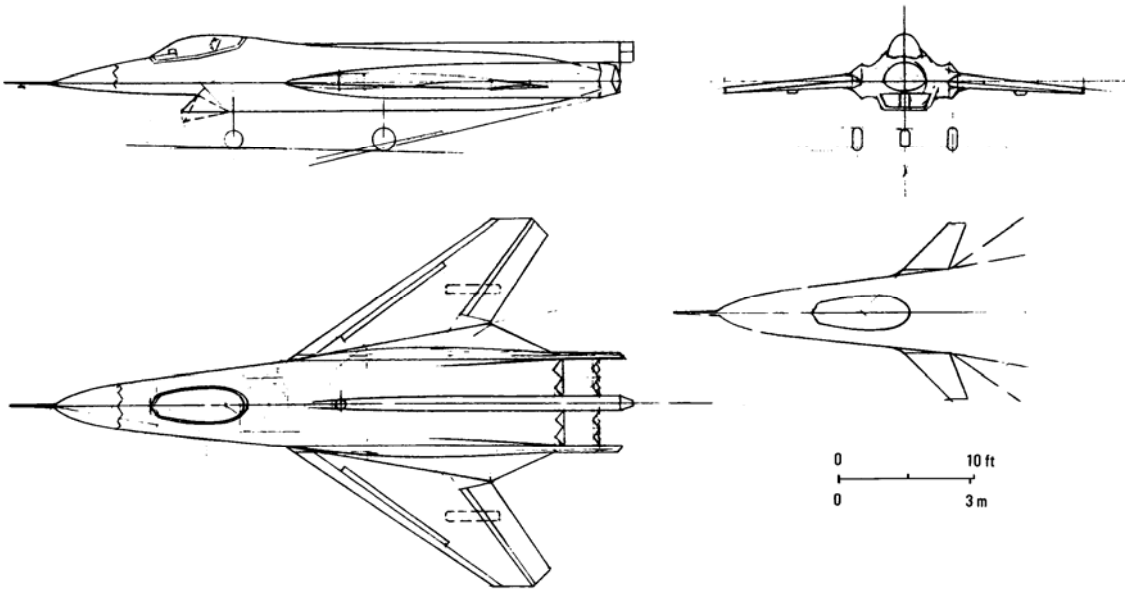

Fig. E.3 Layout of tailless experimental aircraft to investigate use of high-order flight and power control systems for agility and stealth.

Stealth

(a) Elimination of slab-sided surfaces at right angles to the most likely directions from which incident electro-optical radar energy is expected, so that responses are not returned back to their sources. Thus, vertical tail surfaces have been dispensed with, to be replaced with primary control by thrust-vectoring in yaw by means of four carbon-fiber, carbon-skinned lateral yaw-vanes. One is located at the trailing edge of each fairing outboard of the bifurcated and flattened tailpipes. Each of these is opposed by a pair of yaw-vanes on either side of the centre-body between the tailpipes (which also acts as a dipole to defocus incoming radar energy). Lateral deflection of the vanes produces the required yawing moments about the **CG**. The vanes have vee trailing edges to assist scattering of radar returns.

(b) Bifurcation and internal curvature of both engine intake ducts and jet-pipes are to avoid direct line of sight and reflection of radar energy from the compressor and turbine faces.

(c) The intensity of an IR heat signature is reduced by squeezing the exhaust wake into a thin planar sheet, which cools rapidly. This appears to have the added advantage for our purpose of providing an aerodynamic boost for thrust-vectoring in pitch by using the upper and lower tailpipe pitch-vanes in the same sense as elevators. Their trailing edges and the edges of their hinges are serrated to scatter incoming radar returns, and to reduce effects of impedance between the air, the hot gas flow and the tailpipe materials. The serrated trailing edges are also intended to turbulate and so assist cooling of the exhaust, to reduce electro-optic IR (infra-red) detectability.

(d) The single lip intake has a projecting broad arrowhead bottom lip, to scatter radar returns from head-on. The centre-body which splits the intake ducting both acts as stowage for the nosegear and behaves as a dipole to defocus radar energy entering the intake cavity. The duct is lined internally with RAM (radar-absorbent material).

(e) Although not all are shown in the drawing, the joints of undercarriage and other doors, hatches and panels have dog-tooth serrations where gaps occur, to reduce reflectivity caused by impedance between air and metal.

(f) The cockpit is a highly resonant chamber for radar energy. Therefore, glazing is laminated and treated with a coating of indium tin oxide, optimized to reduce radar reflections from the cockpit cavity.

(g) Body chines and outer-plane leading edges have serrated internal reflectors, which also act as stiffeners. The spaces between them are filled with pyroceramic cement, which enhances stiffening.

Agility

(a) Primary control is by thrust-vectoring. The aeroplane has no 'natural' stability, it is neutral to completely

unstable. The **CG** is at or aft of the aerodynamic centre, the neutral point of the whole aeroplane. Wing anhedral is to reduce to zero roll with sideslip or yaw, caused by the marked sweep of the surfaces. Pumping fuel fore and aft provides experimental adjustment of the **CG**.

(b) First thoughts are that as the larger full-scale aeroplane would be relying entirely upon high-order fly-by-wire and thrust-vectoring, with no means of reversion to aerodynamic control, (remote) engine failure would mean abandoning the aircraft. As a safeguard with the experimental demonstrator, the smaller machine has fully active, split multi-purpose flaperons at the wing trailing edges, to provide secondary aerodynamic control in yaw, roll and pitch, in addition to their acting as air brakes. The outer planes are thin (7% rear-loaded sections); their actuators are in external fairings on their undersurfaces.

(c) Actuators for the thrust-vectoring yaw-vanes are located inside the faceted fairings which run fore and aft, within which are additional fuel tanks and the main-gear stowage. The additional fuel tanks enable the **CG** to be adjusted for test purposes.

(d) While acknowledging current advanced thinking in NASA and the US Air Force about the use of structural flexibility, in the form of an 'active aero-elastic wing', to provide roll control of tailless aircraft, an experimental mechanical alternative is favored. The outer planes are small and stiff. Roll control at high speed is by alteration of the dihedral of the outer-planes, using differential rotation about swept-back hinges, where the outer-plane roots and the swept fuselage centre-section meet. For test purposes, neutralization of roll with sideslip is by adjusting the dihedral. Symmetric increase and decrease of dihedral about the swept hinge lines increases and decreases the angle of attack of the outer-planes, and with it their lift. The system must be irreversible in turbulence; this involves automatic electro-hydraulic gust alleviation.

(e) The fuselage has sharp chines to provoke even shedding of vortices, which otherwise cause asymmetric forces on the forebody and uncommanded oscillatory pitch, roll and yaw.

(f) There is scope to add small canard foreplanes to provide additional authority in pitch, enabling the pilot to adjust pitch attitude, while reducing risk of over-control.

(g) Controls are operated from a glass cockpit, which we saw in Chapter 8 is one which relies upon computer software and glass screens to present information. The pilot has side-stick hand controls and rudder pedals which operate the various surfaces through the computer. Main controls are fly-by-wire, with hydraulic-assisted pitch, roll and yaw reversion in an emergency, using split air brake/elevons on the wings.

(h) The aircraft has leading-edge flaps and separate, smaller, vortex flaps behind them.

(i) To operate super-stalled, with reduced risk of engine surge or flame-out, the forward-raked engine intake lip is lowered, improving air-swallowing in unusual attitudes.

(j) The experimental flight test program is likely to be stimulating for the pilot, therefore the aeroplane is fitted with an anti-spin chute and/or anti-spin rockets, and a drag-chute in a dorsal fairing along the spine of the aircraft. Escape is by means of a zero height-zero airspeed rocket-propelled ejection seat.

Although the aircraft has purposes other than for high performance, it should be capable in theory of M = 2.2 with ease. Lacking the weight of tail surfaces, there is a considerable saving in structure weight, wetted area and drag, enabling a lighter aeroplane to be constructed. Alternatively, it has the ability to carry a heavier variety of test equipment.

As the aircraft is intended to explore handling, which may be tricky, there is a considerable advantage in having a high thrust/weight ratio. This enables the pilot to get out of trouble swiftly, with controls working with increasing effect in the engine exhaust on opening the throttle. Moments of inertia are relatively low, which means quick reaction to control.

Low-speed handling and turning performance are areas of special interest in the test program, together with field performance and lateral control during crosswind handling on take-off and landing. The fuselage structure behind the cockpit has an inclined bulkhead, and space behind that for the necessary jacks, to provide for experimental drooping of the nose later in the test program.

Areas of difficulty

The project is a high-risk device. There is a saying about being careful not to bite off more than one can chew. This aircraft contains far too many unproven (and so far unprovable) features in combination. It is unwise to attempt more than one major innovation at a time. Yet, it has a complicated vectoring thrust system; FBW; difficult wing structure and systems; lateral control by means of asymmetric changes in dihedral; vortex flaps; and combined wing trailing-edge lift, control and air brake surfaces for emergencies, all coupled with stealthy features.

A primary area of concern for the test pilot(s) is the provision of enough pitch, roll and yaw control to cope with an emergency, engine-out and with a crosswind. Being able to rotate the aircraft in pitch, so as to flair adequately on touch-down at the lowest possible airspeed, is vitally important. To leap in with an unproven

supersonic aerodynamic shape, using a computer and fly-by-wire technology with no manual reversion, in the hope of keeping out of trouble by writing a software program, would be irresponsible. To bite off the whole of the vertical tail surfaces on a first prototype, while relying on an equally unproven control system using only thrust-vectoring could be worse. For that reason manual power-assisted control by split-flap elevon/air brakes, driven by a hydraulic system and retractable windmill pump, which drops automatically into the airflow in an emergency, is essential. A considerable amount of wind-tunnel and system testing will be needed.

The aeroplane is relatively small. It has a span of 27 ft 7 in, a length of 43 ft 6 in without the probe, a total wing area of 410 ft^2, a take-off weight of 14,980 lb and a thrust/weight ratio of 1.07 (0.93 lb/lbf st, see Fig. E.1(a)). Although small it will not be cheap. There is a strong possibility of losing such a complicated aeroplane somewhere in the test program, regardless of how well models might have behaved during wind-tunnel tests. If the engine fails, then a ram-air-turbine (RAT) will be needed to provide enough stand-by electrical power for the electronic, pneumatic and other systems needed to accomplish a recovery and emergency landing. This will be in addition to the broadly similar pump providing hydraulic pressure for the stand-by flying controls.

Knowing that flying controls which are downwind (downstream) of airframe components ahead of them suffer reduced authority due to wake effects, it makes sense to think seriously about incorporating a canard foreplane ahead of the wings. Located ahead of the **CG** it is usefully destabilizing and can, therefore, be made smaller than a tailplane following behind. As this will tend to make a longitudinally unstable aeroplane even more unstable, there must be an adequate power supply to provide adequate auto-stability in an emergency.

Finally, even if everything works as hoped, considerable redesign of the fuselage would be needed to install an engine with a direct lift capability, including a swiveling main nozzle and a shaft-driven lift fan, or whatever is chosen from several possibilities to provide ASTOVL. The rear fuselage would have to be shortened to reduce the moment of the main nozzle about the **CG**, and the cockpit moved forward to make room behind it for a fan with an adequate moment arm, optimized to produce both lift and balance. A totally different control system would also be needed for maneuvering in the hover. In effect one can see the aeroplane suffering so many significant changes throughout its working life that it would become a completely new aeroplane. As such there is the risk of it proving far too costly in the end, through setting out to make one airframe do too much.

It makes more sense to build, say, three much simpler prototypes, and limit what is to be explored with each. The loss of one would not then wreck the whole program.

E.3 Tactical strike/reconnaissance

The combination of tactical strike/reconnaissance is, in many respects, a completely new concept, and one which caused a great deal of agonizing conflict between the military, the government and the aircraft industry in the UK in the 1960s. Useful published information is comparatively scarce, but enough has been made known to reveal a number of interesting teaching points.

E.3.1 The TSR.2

The BAC (Vickers) TSR.2, shown in Fig. E.4, was designed originally to meet the General Operational Requirement, GOR.339, circulated direct to the industry as well as the Ministry establishments in the second half of 1957.

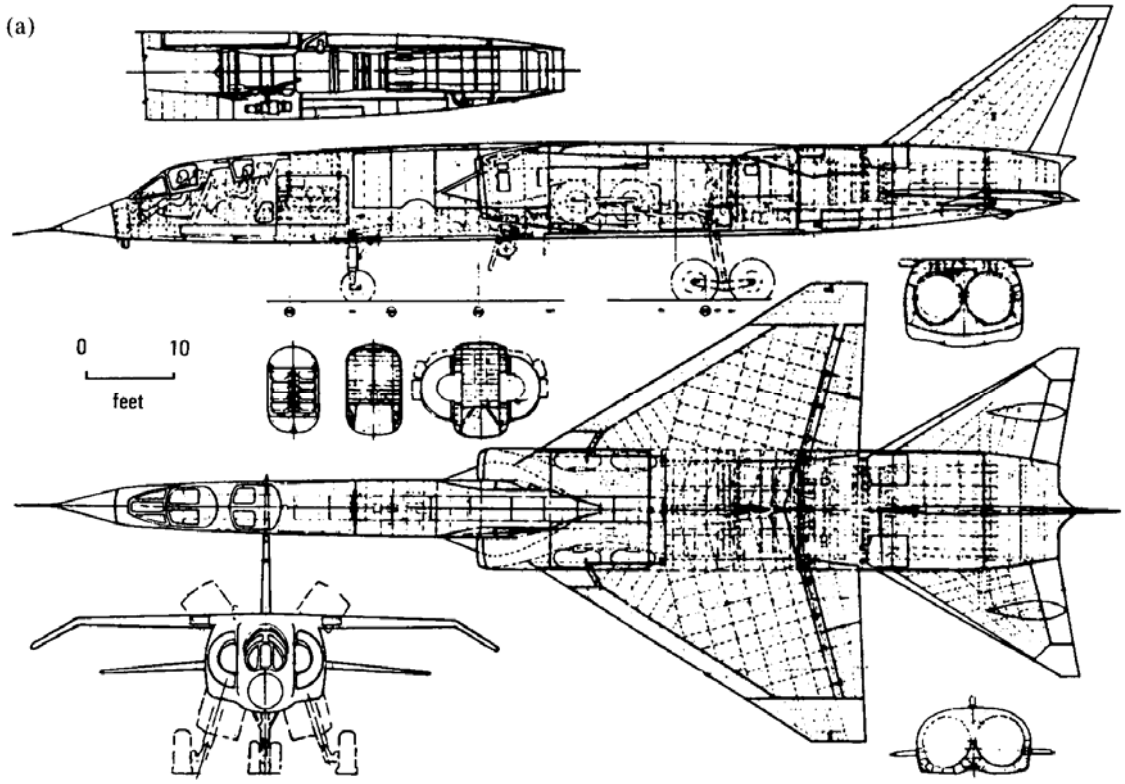

Fig. E.4 (a) BAC TSR.2 which first flew in 1964 and then was axed for political (not technical) reasons. The jigs were hastily destroyed (sic), under close supervision.

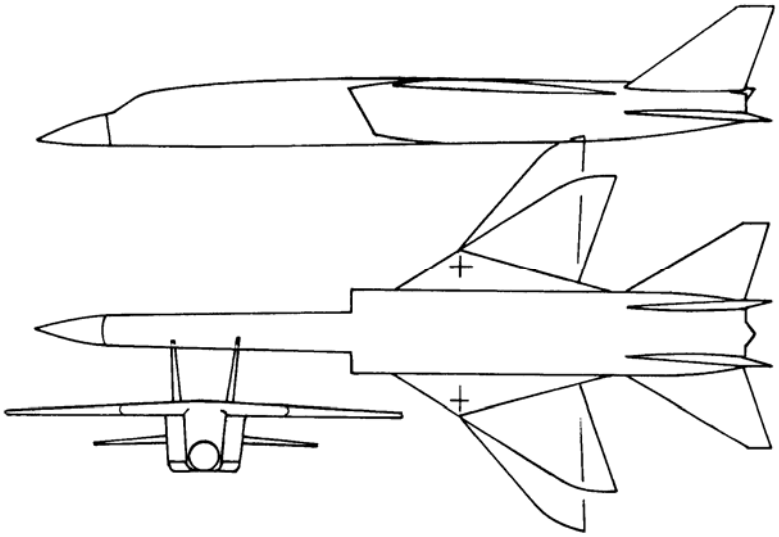

Fig. E.4 (b) Shows the aircraft after being revived as TSR.201 for student aircraft design coursework. Aerodynamic and other changes were investigated to improve range and loiter-time at altitude, low-observability and operational flexibility.

In due course that GOR was overtaken by OR.343. The aircraft companies were asked to submit feasibility studies. The configuration of the aircraft was determined by 3 factors: the ability to penetrate to a target at low altitude and high speed; STOL in crosswinds from rudimentary (bulldozed) airstrips; and the ability to fly reasonably long ferry ranges. The thin delta wing was held to afford the best compromise of low lift slope (low gust response), essential for low-level supersonic flight, while providing a wing large enough for STOL.

The engines were two Bristol Siddeley Olympus 320s, rated at 30,000 - 33,000 lb static thrust with reheat. Estimates indicate that the machine would have been capable of M = 2.2 or more, and would have had a take-off weight around 100,000 lb. The take-off span loading would have been about 2,700 lb/ft and the equivalent wing loading about 145 lb/ft^2. One may deduce that the lift-dependent drag would have been very high at altitude and low EAS (the best range with a turbojet is at or above the tropopause). To aid short take-off the nosewheel leg could be extended, setting the aeroplane at a larger angle of attack and providing a thrust component in the vertical plane. The low aspect ratio wing would probably have had no clearly defined stall while providing a good working lift at low take-off speeds, despite the high drag, so that time would be saved by avoiding running forward to the speed where enough 'bite' from the tailplane could be used to rotate the aircraft.

With flap down there would have been a strong nose-down pitching moment to be countered by the tailplane, acting on a short moment arm. One may guess that the centre of gravity would lie at about 60% of the length from the nose, and larger tail surfaces (more tail volume) would have imposed heavier weight penalties. The tailplane (or tailerons) had small trailing-edge flaps - in effect camber-increasing flaps - to increase the overall slope of the tailplane lift curve. In this way deficient tail volume would be compensated for by the increased effectiveness of the tailplane when deflected.

One may also conjecture that the aircraft would have been deficient in 'natural' directional stability with such a small fin volume at supersonic speeds. It is probable that the fin would have required deflection to counter yaw, thus augmenting the natural stability. No doubt the artificial stability would be supplied by picking signal information from a central inertial system, the pick-up then being fed into the flying-control system. The conjecture about a deficiency in fin volume is supported by the wing tip anhedral. It is probable that the aircraft would have suffered from Dutch-roll, a lateral and directional oscillatory instability, caused by too much dihedral effect and too little fin. The anhedral tip is the simplest and cheapest structural modification to reduce the lateral stability relative to the apparently deficient natural directional stability.

The wing appeared to have a sweep of 50^0 at the quarter chord and an aspect ratio of 2. The gross wing area was about 700 ft^2 and the ratio of the wetted area to wing area appears to have been about 5. The span of 37ft suggests that $span^2$/wetted area would have been something like 0.38. Using Fig. 6.23, the maximum subsonic lift/drag would have been around 8 to 10, say 9 as a reasonable average. At supersonic speed the $(L/D)_{max}$ might have been around two-thirds of that value, say 6. Some idea of the magnitude of the forces involved begins to emerge. The engines would have developed about 3.5 tons of thrust each to move the aircraft through the air at the design point, while burning perhaps 1 ton of fuel every 10min in doing so.

The TSR.2 had a crew of two and could carry bombs internally. The navigational and other electronic equipment, generally collected within the term avionics, was extremely complicated and probably very heavy. The whole aeroplane was an airborne weapon system designed to operate at a height of 100 - 200ft. A simplified corridor of operation is shown in Fig. E.5.

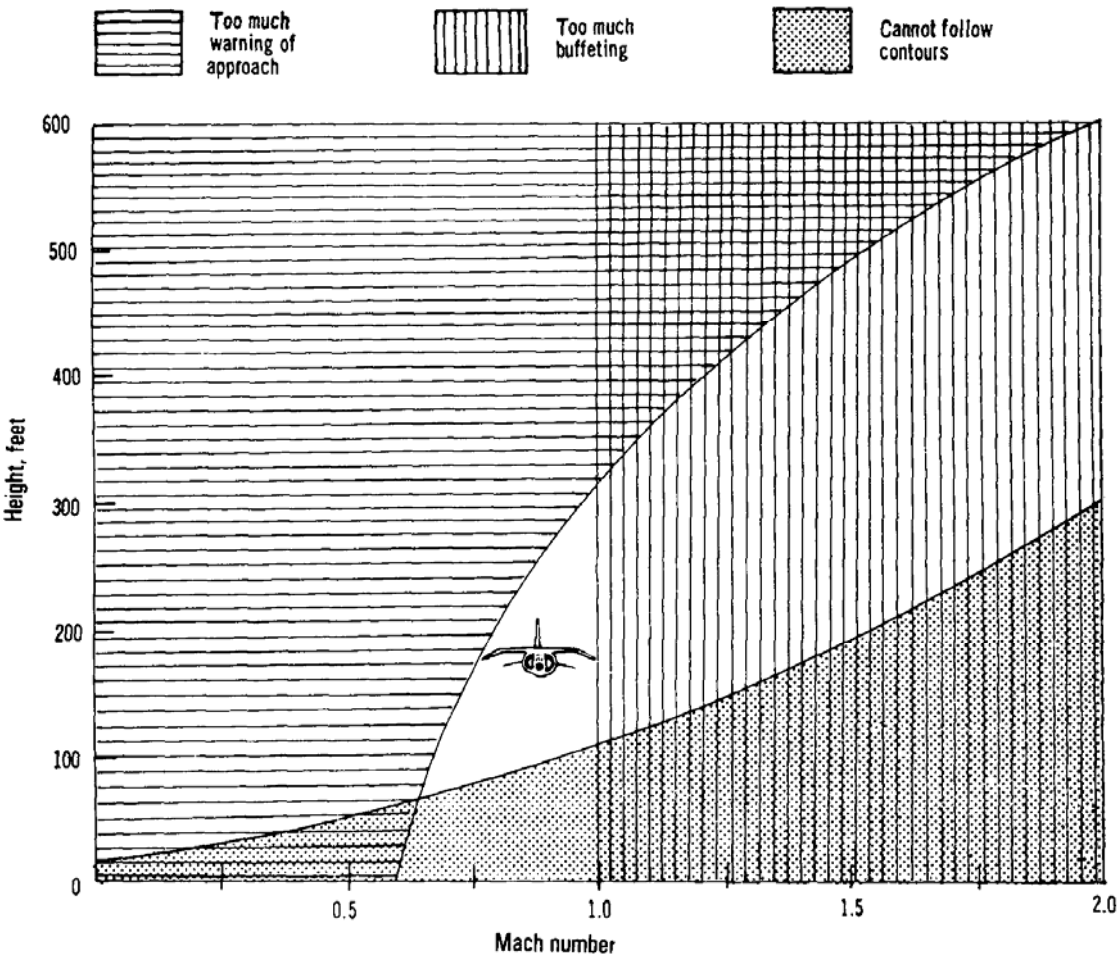

Fig. E.5 Simplified corridor along which an aircraft might make a low-level strike.

The low aspect ratio wing, as mentioned earlier, would have had a shallow lift/angle of attack curve. It may be shown that the normal acceleration imposed by a gust, which changes the angle of attack by an amount w/V, is directly proportional to the lift slope, the wing loading and the velocity of the aircraft. The shallower the slope, and the higher the wing loading, the faster the aeroplane may fly without requiring excessive structure weight and, hence, a reduction in fuel load. At too high a speed it is impossible to follow

the ground contours without imposing excessive normal accelerations. It follows that there is a relationship between the type of terrain over which an attack is to be made, the speed at which one must fly, and the minimum height above the ground. If one flies too slowly, or too high, then there is a danger of being seen by the radar and caught by fighters and missiles. Flying too fast causes compressibility buffet. One may deduce from the TSR.2 wing that compressibility would have become critical round about M = 1.0.

Reports in the press suggest that the TSR.2 became too highly specialized and was overtaken by events, for during the development period defence requirements began to change radically. The aircraft was designed for low-level strike and reconnaissance and, one may guess, lacked the aerodynamic efficiency for long-range flight at altitude. A reappraisal of future operations in other parts of the world, where action must be carried out cheaply, would make the aircraft appear a very expensive and mighty sledgehammer for cracking nuts. It is significant that the project was shelved in 1965, after more money had been spent upon it than upon any other single weapon system in the British armory. It is also perhaps significant that the manufacturers, the British Aircraft Corporation, were showing a model of a broadly similar aeroplane, but with a variable-sweep wing, at the Paris Salon in 1963, in an effort to attract customers.

TSR.201 project

The following design project was undertaken in 1992-1993 at Loughborough University, the student acting in the role of team leader in the Project Office of the aircraft manufacturer:

'Operational Requirement 343 called for a "weapons concept" aircraft which came to be designated TSR.2, designed for high-speed, low-level weapon delivery at M = 0.9, or M = 1.1 at low level, and M = 2.0+ at 55,000ft. It was widely believed to have been cancelled for political, not technical reasons. Unusually, because they often lie around and rust for years, the jigs were openly destroyed on the direct orders of Her Majesty's Government/Ministry of Defence, together with all but 3 airframes shortly thereafter. Assuming that they had not been destroyed, and that many of the drawings and other records remain, you are to draft a proposal for TSR.201, a redesigned and updated version of the aeroplane, incorporating as few costly major design changes as possible. The broad operational requirement is defined below. A presentation by the company to representatives of the Government and Joint Chiefs of Staff is scheduled for late May. Your draft is required by mid-April.

Aim

To propose an aircraft for the 21st Century with a strike/reconnaissance range in excess of the 1,000nm radius of action of the TSR.2. In-flight refueling is essential, as with the original. The UK industry is looking for markets overseas, with the added possibility that the RAF might be induced to purchase 40 as a Tornado replacement. TSR.201 must have a smaller radar cross-section than its predecessor; and a M = 2.3 capability.'

The configuration of the TSR.201 was determined by: the need for a better (L/D) and reduced lift-dependent drag in the cruise; improved specific fuel consumption; reduced radar cross-section for stealth; in-flight refueling; the ability to carry out high-speed strikes at low level; low lift slope for low gust response; a wing area large enough for STOL. In view of speculation about the inadequacy of tail volume in Section E.3.1, the direction taken was:

(a) A swing-wing with leading-edge droop and trailing-edge flaps, as featured in one of the first English Electric P.17 design studies.
(b) Twin fins and rudders, also as in one of the first P.17 design studies.
(c) Two turbofan engines in the 33,000 -35,000lbf static thrust class, to cope with anticipated growth in take-off weight.
(d) Retractable in-flight refueling boom, as on the original TSR.2.
(e) All surfaces (including fins and rudders) which previously had a slab aspect to be inclined, as far as possible, at least 7^0 to the normal.
(f) Carbon-fiber and other composites to be used wherever possible to reduce structure weight.
(g) Differential slab tailplane surfaces to be used for pitch and roll control, as on the original aircraft.
(h) The aeroplane to have no natural stability. (Note: The TSR.2 had 'natural' stability in pitch and roll, and up to M = 1.4 in yaw. Directional stability was maintained beyond that with 'fin-stiffening', by means of an all-moving fin, auto-stabilized with Mach-sensing.)
(i) Control surfaces, active, fly-by-wire, for lightness.
(j) Rectangular exhaust nozzles for thrust-vectoring in pitch.

Estimates suggested that a configuration similar to that shown in Fig. E.4, using late 1990 technology and materials, would have had a gross weight about 7.5% heavier than the TSR.2, taking into account the weight of the wing, its mechanisms and systems. In the event this would have been the over-ruling factor against such a project. However, purely from the aerodynamic point of view, the longer span when spread for subsonic

cruise would have been increased by 50%, that would have reduced lift-dependent drag, which is inversely proportional to span loading, from an estimated 2,670 lb/ft to nearer 1,900 lb/ft, i.e. an improvement of about 40% in (L/D). The use of turbofans instead of pure turbojets would have improved the specific fuel consumption by 30%, near enough. Hence, from Eqn (4-11), assuming the same fuel-load ratio (W_f/W), and cruise Mach number, range would be improved in a quick 'back-of-an-envelope' ratio of

$$\frac{M}{\bar{c}} \times \frac{L}{D} = \frac{M}{0.7} \times 1.4 = 1.3 \times 1.4 = 1.8 \text{, or thereabouts}$$

in other words, an improvement in theory of around 80%.

Wing loading was largely unchanged between TSR.2 and TSR.201 in the high-speed cruise case. However, with the wings spread the effective area was increased by nearly 16% over that of the TSR.2. The lower the wing loading, the better the take-off performance. Even at the increased take-off weight, wing loading was reduced by 10%.

The flaw in the argument

Unfortunately, the weight penalty of 7.5% (which looks relatively small) is a great deal in practice. By comparison with Table 12-2 it is roughly equivalent to the sum of the undercarriage-plus-stabilizer, or one-seventh of the fuel load. Therefore, as English Electric and the British Aircraft Corporation had found, there would have been no merit in reviving the swing-wing variant, without an unforeseen leap in technology. It would have been no cost-effective improvement on the original aeroplane.

Even so, the swing-wing Tornado subsequently came in part from the same stable as the TSR.2, now the BAe, Warton. The RAF also had the Lightning from Warton (see the Frontispiece).

The addition of a second fin would significantly alter the **CG**, necessitating ballast in the nose, and that in turn would increase the weight penalty. The additional surface of more than double the wetted fin area, would have entailed undesirably increased drag. All of the anticipated aerodynamic advantages would have been nullified.

Postscript to the TSR.2

It is said that a Phase 2 version of the original aircraft, fitted with modern turbofans and equipped with a state-of-the-art weapon system would have been a more practical course.

Oddly, although one argument against the original TSR.2 was that the USA would never buy a British military aircraft, it bought around 450 Canberra bombers; and more recently over 300 of the second-generation VSTOL AV-8B Harrier II, jointly produced by McDonnell Douglas and BAe for the US Marines.

Looked at from a commercial view-point, it was a purely political decision to destroy the TSR.2 in such an unwise fashion. The author thinks mistakes were made at the time. The UK could have been in business selling a modern, modified version on the open market. Those who wanted the jigs and airframes destroyed must have known that.

E.3.2 Powered-lift low-level bomber project

By comparison a particularly interesting project of the College of Aeronautics, Cranfield, is shown in Fig. E.6. The aeroplane was designed in the year following the circulation of GOR.339, that led to the TSR.2.

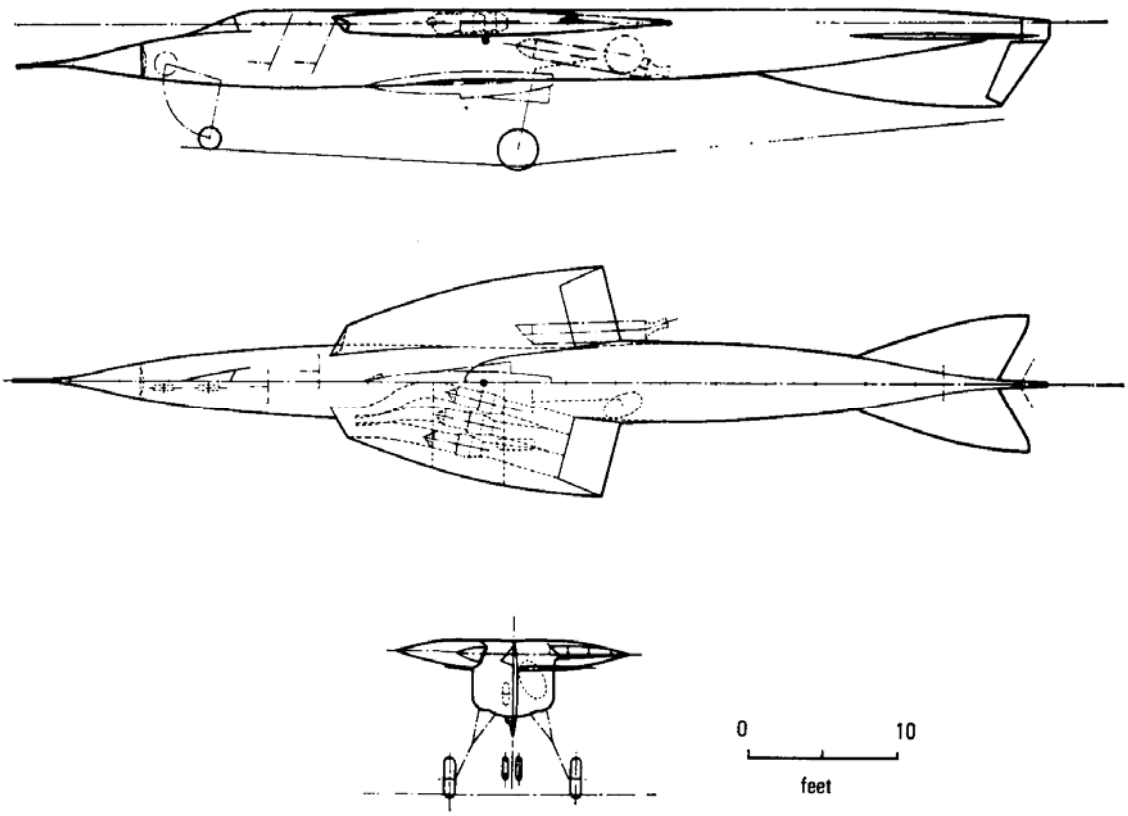

Fig. E.6 Low-level bomber (College of Aeronautics, 1958).

The low-level bomber was smaller than the TSR.2 and weighed about one-third of the estimated all-up weight of the former aeroplane. Note the very low aspect ratio wing, and what has been said of wing loading and lift slope. The design speed was M = 1.5 at sea level. Rockets were to boost the take-off thrust of the six 2,200 lb sea-level static-thrust turbojet engines. The six engines were housed within the wings, the exhaust gases being led across the rear 17% of the upper wing surface. We may assume that the exhaust would increase the lift of the wing by inducing super-circulation.

The operational range was 1,200nm carrying a 2,000 lb guided stand-off bomb. This was housed in an area-ruled recess in the bottom of the fuselage. The ventral fin would have been more efficient at large angles of attack than a dorsal fin, but the approach and landing speed would have needed close control to maintain the landing attitude within the inevitably narrow limits. One shudders to think of the effects of engine failure.

E.4 Strategic strike/reconnaissance

The traditional long-range, high-altitude bomber/reconnaissance aeroplane is covered by the term strategic strike/reconnaissance. Such aircraft used to carry anti-fighter armament in the form of rearward-firing guns, but this is no longer practicable because of the severe weight penalties involved, and because fighters can attack with guided weapons while staying well out of range.

The modern strike/reconnaissance aeroplane must rely on the evasive power of:

(a) High speed, i.e. M = 2 - 3.
(b) Flight at very high altitude, above, say, 65,000ft (the steady ceiling is usually higher than that of a fighter).
(c) Improved maneuverability.
(d) Small size, to reduce the radar cross-section.
(e) Radio counter-measure (RCM) equipment for jamming enemy radio and radars.

In many ways the design problems are similar to those of the supersonic transport aeroplane, except that one might expect the strike/reconnaissance machine to be smaller. One must achieve maximum economy in fuel consumption, and for this the engine and aerodynamic efficiencies must be of much the same order as for the SST. Radar reflectivity, however, is a function (among other things) of frontal area. If one is to achieve intercontinental ranges with an aircraft of smaller volume than the SST, then we might expect to see a slight difference in structural (and aerodynamic) layout.

The most important difference in structural layout would be the use of bending relief. Instead of mounting engines inboard, within the fuselage, or in centre-section and centre-line boxes, the engines would be hung outboard, along the wings. The wing tips are a most attractive position for the engines, for in that

position they not only provide maximum bending relief, but serve as endplates that increase the effective aspect ratio by reducing the effects of the tip vortices.

Arguments have already been stated for the slender-delta and canard layouts in Chapter 8, where the aerodynamic sum was balanced. There, Fig. 8.18 showed the general arrangement of the Lockheed YF-12A, and this should be compared with Fig. E.7, which shows the cancelled Avro 730 reconnaissance aeroplane of 1955-1957. Both aircraft have their engines placed outboard and have similar orders of slenderness, although the Avro 730 would have been much longer overall.

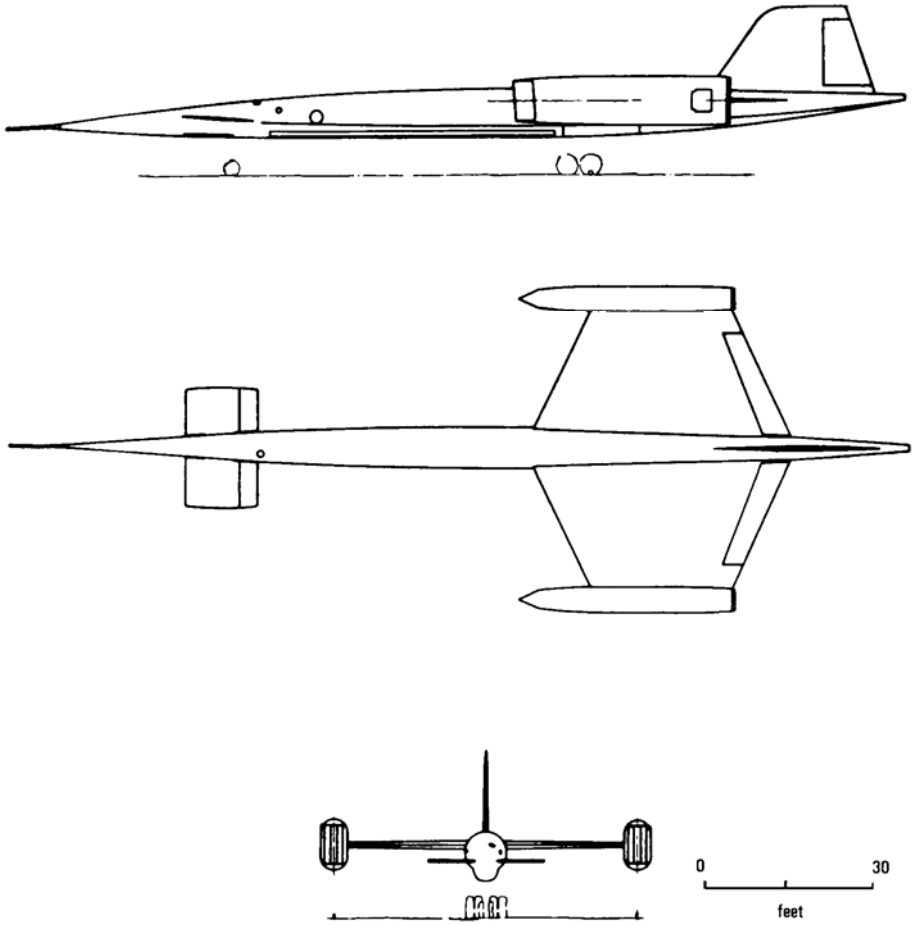

Fig. E.7 The Avro 730 (UK, about 1956).

The Avro 730 had centrally mounted mainwheel units, almost a bicycle arrangement (including nacelle outriggers), except that the mainwheels carried most of the weight of the aeroplane. A strike version would have required a rearrangement of the main wheels, to provide room for weapon stowage in the fuselage. The alteration might have entailed fitting nacelles beneath the wings, to house wheels and fuel, for there would have been no room in the engine nacelles, and some fuel volume would have been surrendered in the fuselage. To meet the runway LCN requirements at maximum weight, four extra main wheels were fitted, these could be dropped after take-off.

Instead of a conventional cockpit the pilot had a periscope. This was retracted in flight and raised on take-off and landing. The aircraft would have had a crew of at least three: pilot, navigator and air electronics operator.

Nothing can be said of performance, but from Fig. D.4 one might expect the cruising speed to have been M = 2.2 - 2.5 at 65,000ft, and the range anything from 4,000 to 5,000nm. The structure would be of steel. Payload would be of a similar order to that of the SST (same state-of-the-art) and such supersonic aeroplanes would be able to carry no more than a small number of individual weapons. To obtain the maximum effectiveness, weapons would inevitably be nuclear. If one wishes to carry a large number of conventional bombs one is automatically limited to the traditional bomber, similar in size, shape and performance to the long-range subsonic transport aeroplane.

E.5 Maritime strike/reconnaissance

Some years ago there was talk of the design of true water-based strike aircraft, and a fighter was built in Britain (the Saunders Roe SR/A1), but little further has been done up to the time of writing. Apart from the report that public interest was shown in the USA in a submersible military aircraft, maritime work is mainly concerned with anti-submarine and shipping strike and reconnaissance from land bases. The Russians have long-range maritime reconnaissance flyingboats and the Americans were reported to have operated seaplanes

so successfully off Vietnam (1965) that the Department of Defence for a time considered afresh the use of amphibians. However, on the whole maritime aircraft are now land-based. In this appendix we will not consider water-based bombers and fighters as such. Instead we will accept the continuing need for long-range maritime aeroplanes for anti-submarine and shipping work, and consider the relative merits of a landplane and flyingboat for the same job.

Maritime landplanes are similar in size and configuration to most low-subsonic transport and bomber aircraft and in many cases they are direct developments of airliners and bombers. Aeroplanes designed for maritime work must be able to carry bombs, depth-charges, homing-torpedoes, flares, mines and a vast assortment of search equipment. Their work involves flying for long hours at low altitudes over the sea, and they therefore require engines that are economical low down. Search and patrol are primary tasks and crew positions are needed with ample room for camera operation. Searchlights may be carried, as well as electronic countermeasure equipment.

Power is by piston, turboprop and turbofan, which produce fuel consumptions almost as low as the most economical piston engines.

One cannot lay down any hard and fast ruling on the order of percentage payload to be carried by such aircraft. One sortie might involve the carriage of 20,000lb of mines a few hundred miles, while another might involve a search, without warload, over thousands of square miles of ocean. Clearly, the more fuel that can be carried the better, and one can only say that the disposable load should be as large as possible.

Just as multi-role thinking is affecting other military aircraft, so too is it likely to affect requirements for maritime aircraft. There have been reports published in Britain, for example, of a foreseeable need for aircraft that can be used both for maritime work and in the transport role, carrying troops and equipment over intercontinental distances. This is taken into account in the layout and size of the two aeroplanes to be discussed.

The landplane has been used as the yardstick for measuring the performance of the flyingboat. The two aircraft were specified by the author to have the same all-up weight and engines, and basically the same aerofoil surfaces. Both were to fly as far as possible, the only real requirement being that it should be possible to carry 15,000lb of warload, freight, or soldiers and equipment for a minimum distance of 2,000 nm.

E.5.1 Maritime landplane

Landplane operations are affected by the size of airfield available. Working to state-of-the-art figures as shown in Fig. E.8 the basic aircraft had a wing loading of 90 lb/ft^2, a power loading of a little over 6 lb/hp, an all-up weight of 142,000 lb and a wing area of 1,580 ft^2. The wing had a basic section of 15% thickness, no sweep, a span of 120 ft and an aspect ratio of 9.1. Power was by four 5,500 - 5,700 ehp turboprops, a low power loading being chosen to give scope for inevitable 'stretching' of requirements, and enough power for the seaplane to still take off on 3 engines.

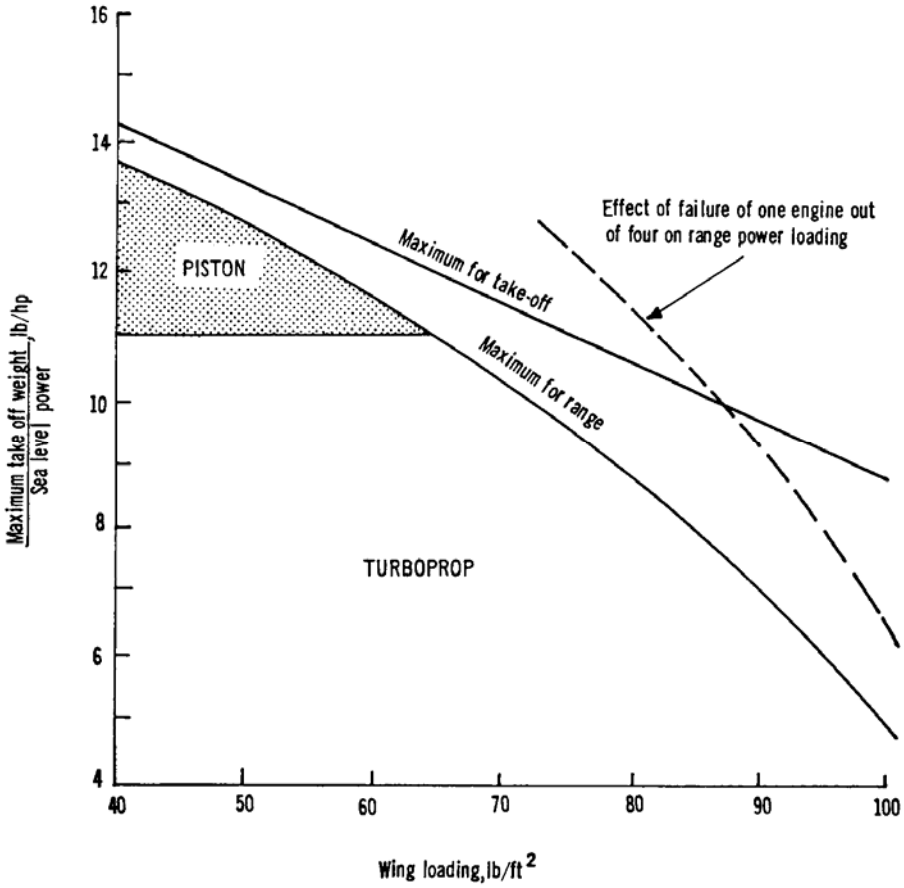

Fig. E.8 State-of-the-art wing and power loading limitations for multi-engined propeller-driven aircraft.

A preliminary drawing of the aeroplane is shown in Fig. E.9. The fuselage had a double-bubble section with a large weapon bay below the wing centre-section. The bottom of the fuselage cleared the ground by about 3 ft, so that the undercarriage might be kept short and light. The bomb doors were doublet-hinged, to fold horizontally beneath the wings when on the ground, thus facilitating loading of weapons. Overload tanks could be carried within the weapon bay. Wing-tip fuel tanks could be fitted.

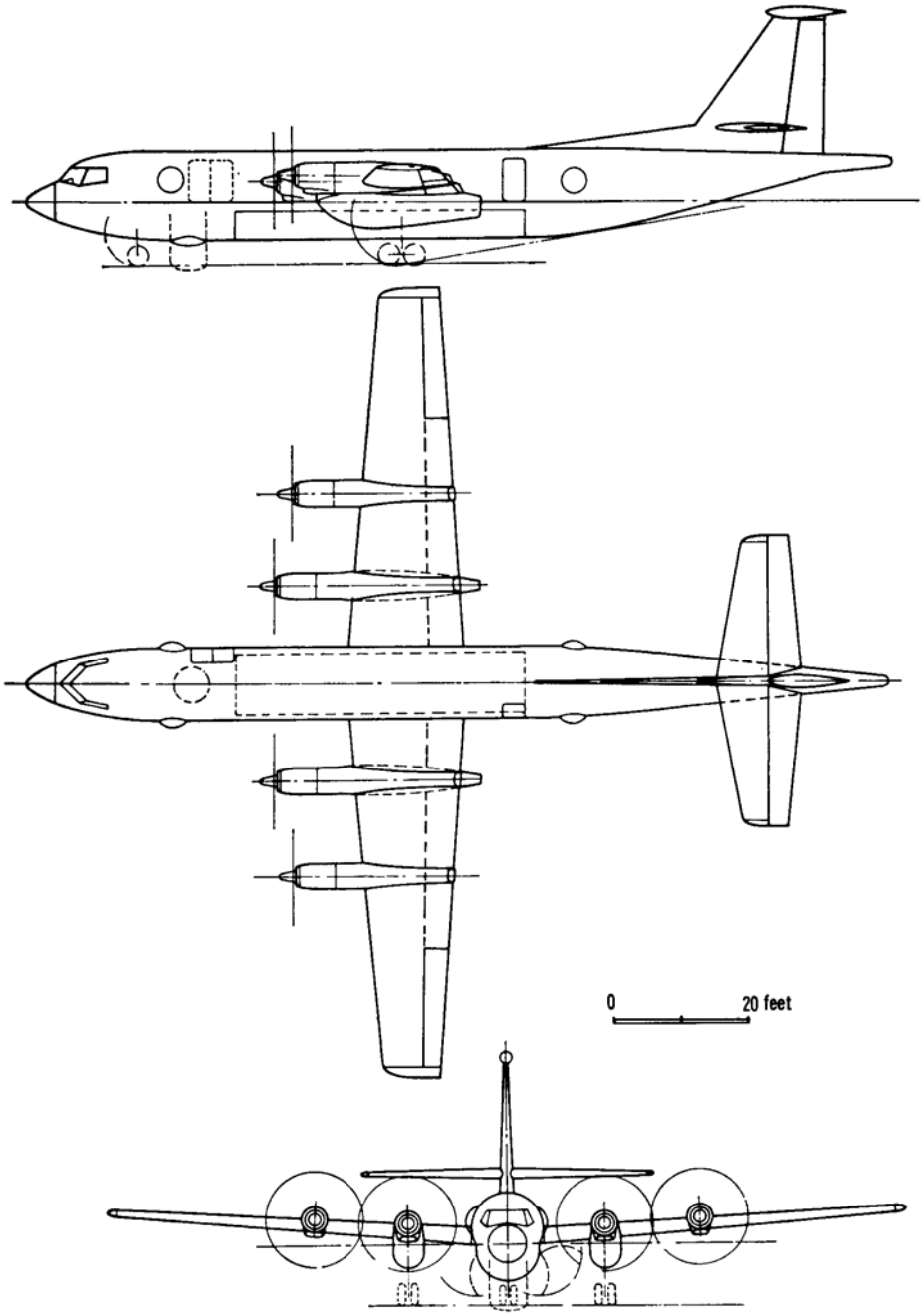

Fig. E.9 Maritime strike/reconnaissance landplane.

Search radar was carried, and magnetic anomoly detector (MAD) gear in the tail-sting. A searchlight was carried under the starboard wing and ECM devices in the fin-blister. Four transparent blisters were arranged (two per side) for observation purposes.

With 15,000 lb payload the range was about 2,400 nm, and with maximum fuel load and no payload, a little over 3,200 nm. Carrying 14,000 lb overload fuel the range would have been about 4,000 nm. The cruising speed, depending upon weight, was 300 - 350k at 15,000 - 20,000 ft. By using twin-engined cruising procedure, but at a much lower altitude, it would have been possible to extend the endurance to well over 12 hours. In the transport role 40 troops might be carried.

The aircraft was fitted with Fowler flaps. Reverse-pitch propellers were used, for deceleration at maximum weight.

E. 5.2 Maritime flyingboat

The flyingboat version is shown in Fig. E.10. The aircraft had the same operational features as the landplane, and the hull was to be basically the same as the fuselage above the main deck. A double-bubble hull section was used, the depth of the hull needed for engine spray clearance allowing the weapon deck to be very deep.

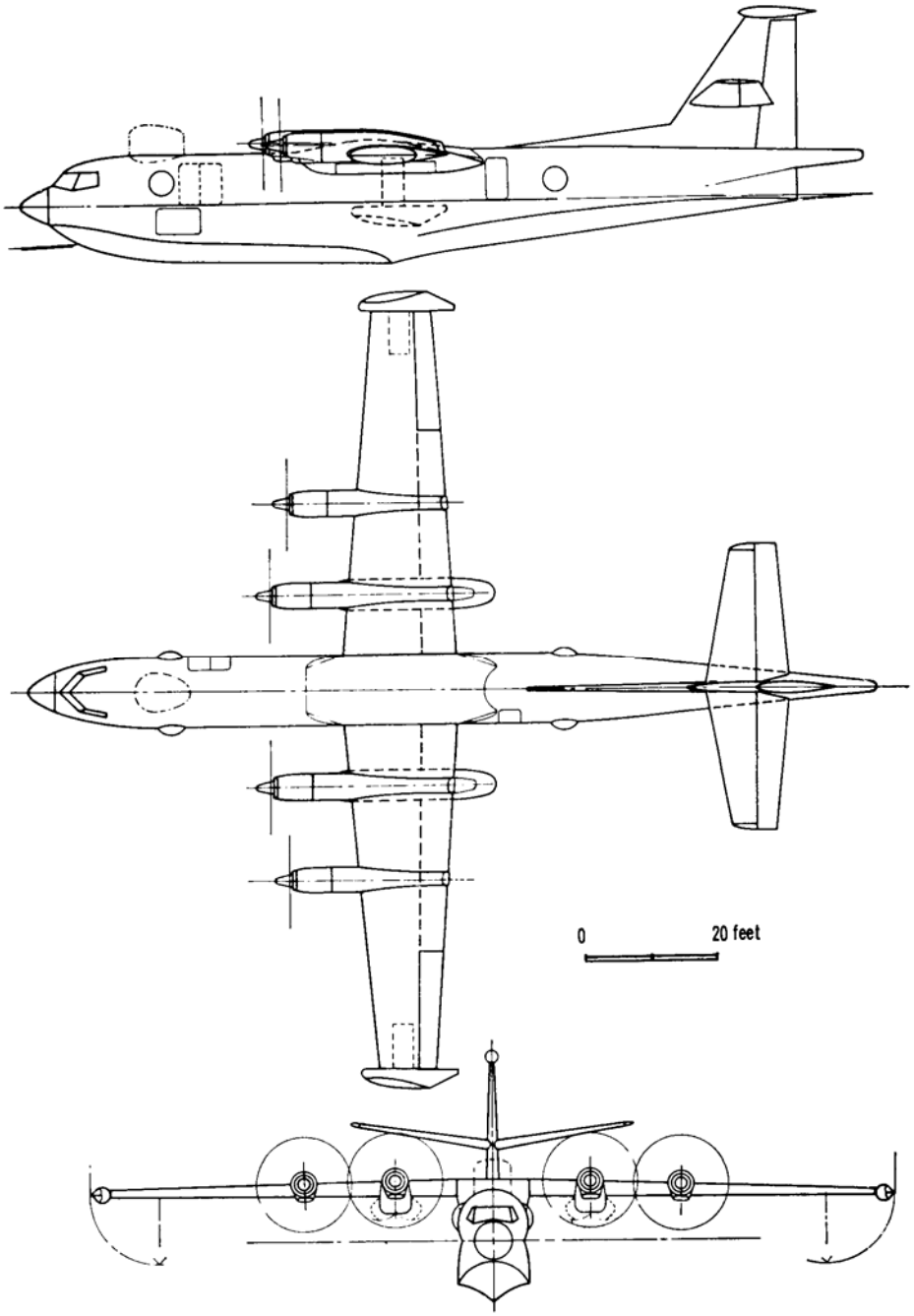

Fig. E.10 Maritime strike/reconnaissance flyingboat.

The arrangement of bomb doors, and a retractable radome for search radar in the bottom of the fuselage is a reasonably simple and straightforward matter with a landplane. In the case of a flyingboat there are certain difficulties. If bomb doors are fitted in the planing-bottom, then they must lie in the vicinity of the **CG**, i.e. forward of the step, in the region that takes the load-on-water when planing, and a correspondingly heavy pounding. Doors have to be strong (heavy), watertight and corrosion-proof. Fortunately there is a way out in that stores can be ejected rearwards instead, from chutes in the after planing-bottom. The technique is used for certain supersonic strike aeroplanes. An operational advantage of rearward ejection is that stores can be dispensed with no forward speed, directly over a target, and aiming errors are thus reduced. Weapon bays can be provided under the inboard engine nacelles and this simplifies matters still further.
The radome is more of a problem. Retraction into the planing-bottom is beset with the same difficulties as for bomb doors, and failure of the retraction mechanism could raise critical difficulties on landing. A retractable radome above the fuselage would reduce the internal space for passengers, and the scanner would be shielded to a certain extent by the hull and wings. A non-retracting radome causes high drag, but could be the simplest solution, depending upon the relative importance of the other requirements. Some radar could be carried in the nose, however, and the problems would be not altogether insuperable.

The structure weight of the aircraft was higher than that of the landplane: about 33% as against 28%. If an undercarriage had been fitted for amphibious work, then the structure weight would have risen to something like 38%. Weight could have been saved by having fixed wing-tip floats, but there were aerodynamic advantages in making them retractable. The higher structure weight of the flyingboat reduced the fuel load by about one-sixth with the 15,000 lb payload.

The hull increased the drag of the flyingboat by 8-10%. The overall effect of increased drag, reduced cruising speed and fuel load, reduced the range of the flyingboat by 17-18% compared with the landplane. Overloading a flyingboat is far less serious than a landplane, however, for by increasing the take-off weight to 171,000 lb the cruising range could have been increased almost to the 4000nm of the overloaded landplane without making excessive spray during the take-off run.

The aircraft would have carried the same payload, but the high wing left the main deck clear beneath the centre-section, allowing another 30 or so troops to be carried. With the 15000 lb payload the range was 2000nm and the cruising speed 280-330k between 15 and 20 000 ft.

Table E-1 compares the landplane and flyingboat. Although the flyingboat has the disadvantages of reduced range, or reduced payload, it would still be a formidable and very flexible aircraft. Such machines can fly well beyond the range of fighters, are not restricted to land bases and can operate wherever there is a supply ship. They can be more heavily overloaded than a landplane, as was found on a large number of occasions during World War II, simply because longer take-off runs are usually available.

Finally, it should be noted that the figures given for both are based upon transport state-of-the-art and not those of military aircraft, which are unobtainable. There is certain published evidence that maritime aeroplanes, smaller than those shown here, fly much further, over ranges of 5000 or more miles. It is certain that given the right order of payload and equipment weights, the figures for the two aircraft could be increased.

Table E-1.

Item	Maritime landplane	Maritime flyingboat
Design weight, lb	142000	142000
Payload, lb	15000 (including 40 troops)	15000 (including 70 troops)
Take-off power loading, lb/ehp	6·2	6·2
Take-off wing loading, lb/ft^2	90	90
Percentage structure weight	28	33 (amphibian 38)
Drag	—	increased by 8 to 10%
Cruising speed, knots	300–350	280–330
Range with payload, nm	2400	2000
Full fuel range (no payload), nm	3200	2600
Overload fuel, lb	14000	29500
Full overload range (no payload), nm	4000	4000

E.5.3 Subsequent developments

Landplane

Maritime reconnaissance became a highly specialized, high-technology field of operation throughout the Cold War, with advances especially in submarine warfare and in airborne early warning (AEW). With the Bosnian conflict in the Balkans have come long-range operations over land in addition to over sea, carried out by the NATO Airborne Early Warning Force (NAEWF). The Nimrod AEW3 encountered insurmountable problems with its radar system, which led to its cancellation in favor of the Boeing E-3D Sentry. This modified Boeing 707 has a flattened rotating 'doughnut' scanner unit, mounted on struts above its afterbody.

Among long-serving aeroplanes, the De-Havilland Comet, which first flew in 1949 as the world's first jet airliner, has been unique. The Nimrod 2000 (Fig. E.11) is the latest in the line of this extensively modified aeroplane. The new variant involves dismantling four-fifths of the retired Nimrod MR2 airframe and replacing three-fifths of it with new structures, to satisfy Staff Requirement (Air) 420. The object of the requirement is to replace the 27 maritime reconnaissance Nimrod MR2s in service with the RAF with a more advanced aeroplane.

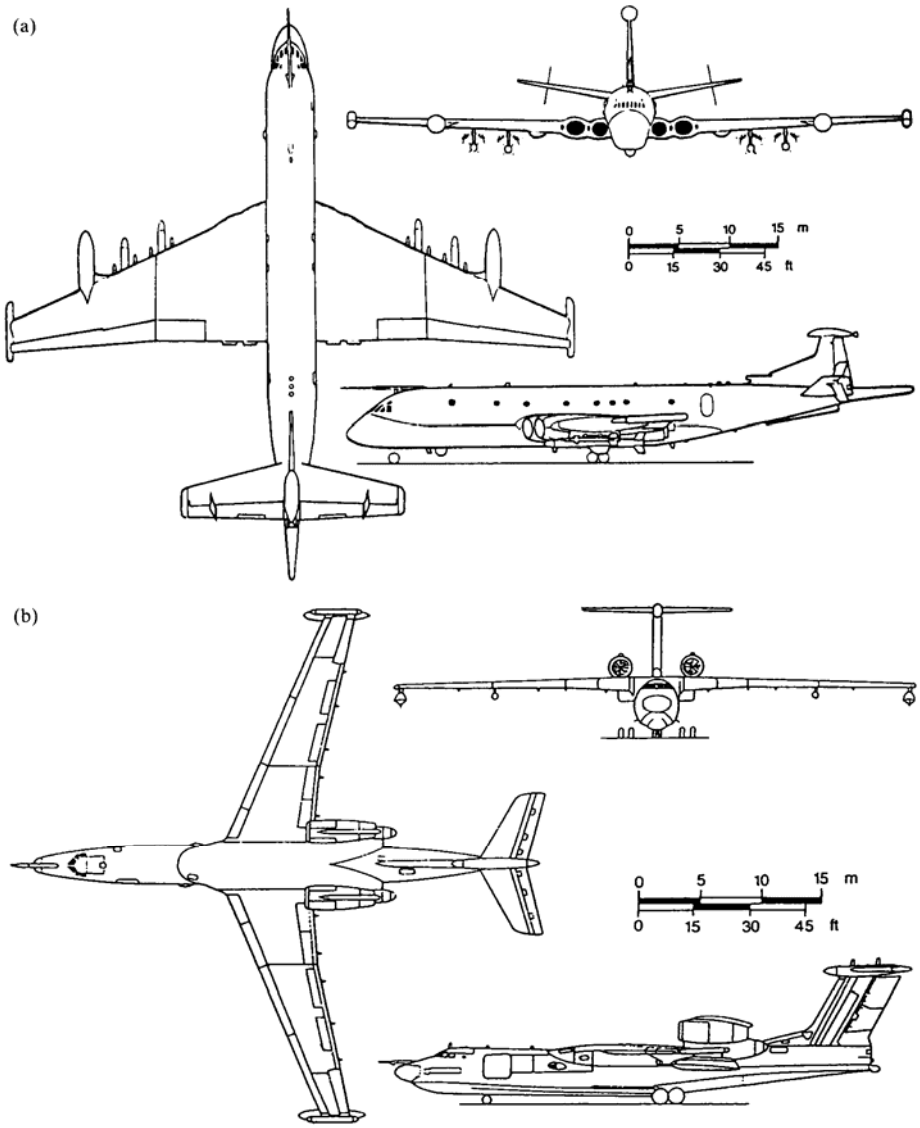

Fig. E.11 Two aeroplanes for similar maritime reconnaissance tasks. (a) Shows detail changes to the current version of BAe Nimrod 2000, of the RAF. The aeroplane has substantially the same basic wing, fuselage and tail as the original De Havilland Comet (Specification 1946, flew 1949), the first jet airliner. (b) Russian Beriev Be40/Be-42 flyingboat. Both aircraft have turbofan engines for economy, long endurance, and speed flexibility at low cruising altitudes.

The wing is completely new, and the span is lengthened by 12 ft. The whole flight deck is replaced by a two-man glass-cockpit (which has seven large glass display screens and four smaller screens, for primary flight information). The wing loading is relatively low, this is necessary for tight anti-submarine hunting circles and rapid weaving at 200 ft or even less over the sea.

The Nimrod 2000 is reported to have a weapon load of around 12,000 lb (5.5 tons) for a take-off weight of 231,165 lb (105 tons), a weapon (payload) fraction of a little over 5%. While that may seem light, balance it against the lethality of modern 'smart' weapons and the heavy fuel component in the disposable load which is needed to give great range and long endurance on target. The engines are four BMW Rolls-Royce BR710 turbofans, each of which generates 14900 lbf st (66.3 kN). Thus, the take-off thrust loading is about 3.87 lb/lbf, putting the aeroplane a little over the strategic strike/reconnaissance boundary in Fig. E.1(a).

With internal fuel and pinion tanks, a reported range of at least 6000nm and endurance over 15 hours is achievable (giving a cruising speed in excess of 400 KEAS, probably about M = 0.7). Turbofan engines provide smoothness of operation and freedom from propeller vibration, making them less tiring for the crews than propeller units. For long endurance and searches two of the four engines are shut down.

It is anticipated that by stretching the Nimrod and revitalizing the airframe, the aeroplane will remain in service until around 2025: around 80 years after the configuration of the Comet is said to have been first sketched on a tablecloth in the senior staff dining room of the De-Havilland Aircraft company.

Seaplane

Not long after the first edition of this book was published the Japanese developed a maritime reconnaissance flyingboat, the Shin Meiwa US-1, a four-turboprop amphibian. Its purpose was substantially the same as the

flyingboat in Fig. E.10.

A major problem with seaplanes is the adverse combination of spray, especially blister spray, and engines. If anything, turbo-propeller units are the more vulnerable because of the damage that can be done to propellers which are large in diameter. The more powerful the engine, the higher the performance and the larger the diameter of the propeller needed to absorb the power. This makes it harder for the designer to locate propellers and intakes away from damaging spray, without inducing awkwardly powerful pitching moments with which the pilot has to deal, whenever he opens and closes the throttle(s).

Turbofans, like turbojets, are easier to shelter than turboprops. This is evident from the installation of the engines of the Beriev A-40/Be-42 (NATO codenames Albatross and Mermaid, respectively), shown in Fig. E.11. The centre-section of the wing and full root-chord lie ahead of and below the intakes.

The aeroplane has a gross weight (displacement) of 189,595 lb (86 tons) and a weapon/ payload fraction of about 6 and 7.5% (0.06 to 0.075 W_0). The D-30 KPV turbofans each produce 26,455 lbf st (117.7kN), making the maximum thrust loading 3.58 lb/lbf at a cruising speed of around 388 KEAS. Maximum fuel weight is estimated to be 77,160 lb (35 tons), so that if this estimate represents the maximum disposable load, the maximum fuel fraction is 41% or 0.41 W_0. Range with maximum payload is reported to be 2212nm and 2967nm with maximum fuel.

These figures, when compared with the Nimrod, bear out to an extent what is implied by Table E-1, that airspeeds and specific air ranges of flyingboats are less than broadly equivalent landplanes. Flyingboats are more costly to maintain and operate than a landplane for the same role, using the same equipment, because of their extra weight, complexity and the care and attention needed to keep corrosive effects of sea water at bay.

Where the seaplane has the advantage is in the specialized tasks it is able to accomplish. They are used by the military in Russia and in China. Appendix G, which discusses aircraft designed to operate in ground effect, mentions the Russian Spastel ekranoplan - in effect a low-altitude flyingboat with a ram-wing - designed, but not developed as this is written, for long-range ocean rescue.

On a historic note, flyingboats carried out remarkable rescues during World War IL. Two examples serve to make the point. The four-man Supermarine Walrus, a single-engined amphibious biplane (designed by R. J. Mitchell who was responsible for the Spitfire, among others), saved well over 1000 allied and enemy aircrew, world-wide. No. 277 Squadron of the Fleet Air Arm alone saved 598 lives. Two four-engined Short Sunderlands, developed out of the large pre-war Empire flyingboats, in September 1939 rescued the 34-man crew of the Kensington Court, torpedoed in the Atlantic. One took 20 men, the other the remainder. The heavier Sunderland is said to have needed a run of 15 nm before it would lift-off.

E.6 Naval aeroplanes

From the operational point of view naval aeroplanes are broadly similar in role and in appearance to those that carry out strike and reconnaissance roles from land bases. Design requirements limit naval aeroplanes in different ways, however, and the design limitations are imposed by the physical characteristics of aircraft carriers.

Decks are short and limited in the loads that they can take. A ship rolls and pitches at sea, while runways are stationary (a ship must be under way to create enough wind for launching and landing aircraft back on deck). Lifts for carrying aircraft below decks are necessarily small. Hangar space between decks is cramped, in height and in extent. Operations may take place anywhere between the harsh extremes of Arctic, tropics and Antarctic. Aircraft picketed on deck spend their lives in a perpetually high wind, are frequently drenched by sea water and permanently coated with corrosive salts.

Undercarriages are stronger than those needed on land. Shock-absorbers have a longer stroke for absorbing the impact of meeting a deck that is rising towards the landing aircraft. Catapult points are incorporated in structures, which must be correspondingly strong enough to take the shock of acceleration to flying speed from a standing start in some 200 feet. Arrester hooks are fitted to decelerate the aircraft from flying speed to rest in similar distances. It should be noted that the use of arrester hooks is being investigated for supersonic land-based aircraft, to ease the problem of designing brakes for emergency stops on take-off and landing (in the USA hooks are fitted to all advanced fighters).

Wings and fins are designed to fold so that aircraft can be stowed between decks. Turboprop machines need propeller brakes to prevent windmilling when picketed on deck.

Because of these design considerations naval aeroplanes are heavier than land-based machines. However, their special design requirements put them in a class that, in many ways, indicates a line of future development for many comparable land-based aircraft.

Appendix F Vertical and Short Take-off and Landing Aeroplanes (VSTOL, STOVL and STOL)

Over recent years there has been a widespread movement towards the design of aircraft for more than one

role. Counter-insurgent (COIN) aircraft, for which many design studies were investigated in the 1960s, represented an attempt in the USA to evolve an aircraft capable of close air support, visual and photographic reconnaissance, helicopter escort, artillery fire control, airborne delivery of paratroops, and cargo delivery. From the practical point of view COIN aircraft made no real impact upon the direction of design. Other avenues were opening up, especially one marked by the British Aerospace Harrier (Fig. F1) which has now proved itself to the hilt in battle. This highly successful aeroplane has operated with both the Royal Air Force and the Royal Navy in support of the Army. The example shown, the GR. Mk7, is a joint US/UK variant.

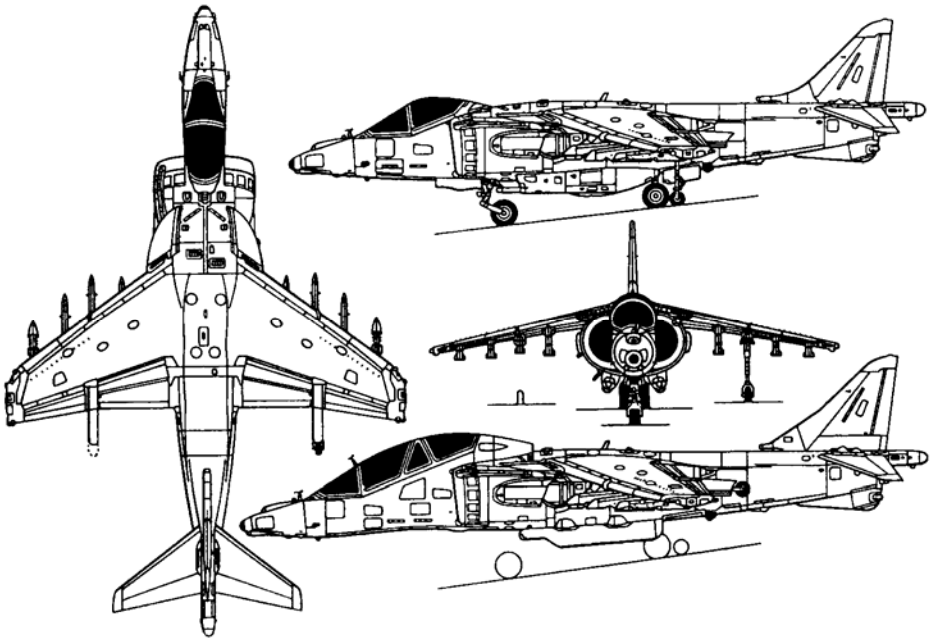

Fig. F.1 McDonnell Douglas/BAe Harrier GR Mk7, VSTOL variant, designed for close support. The additional side-view (bottom) is of the T Mk 10. The extra keel surface ahead of the wing necessitated a marked growth in fin area - in height and as a fin-root fillet. Note: the curved leading-edge extensions (LEX) at the wing roots, which generate powerful flow-stabilizing vortices in a messy area.

F.1 Factors affecting VSTOL and STOYL aircraft

Design for VSTOL breaks into two: design for vertical take-off and landing, and design for short take-off, both of which imply maximum weight. The landing is usually made at a lighter weight, allowing STOVL. Although there are design concepts on drawing boards for large VSTOL machines, those which are already in use are necessarily small in size. The Sea Harrier, while small, has a folding nose which emphasizes the need to consider the dimensions of an aircraft carrier lift. Such machines have given a new lease of life to the concept of the aircraft carrier. The thrust of an engine for vertical take-off (which is, by definition, independent of the size of wing) must be around 20% more than the operational take-off weight, to provide a margin for maneuver and acceleration. An excess of thrust bestows the benefit of overload when there is room for a take-off run. It follows that if an aeroplane is designed for VTOL, the wing can be much smaller than for an aircraft wing matched to the take-off requirements. However, when there is a surface which can be used for a take-off ground run, the wing can be relied upon to provide some of the lift, so enabling an operational overload to be carried.

Take-off performance can be shown theoretically as a function of wing loading, thrust (or power) loading, take-off lift coefficient, relative density and thrust/drag. It may be shown that the ground run depends upon the aerodynamic and propulsive factors in the following equation:

$$K_S = \left(\frac{W}{S}\right)\left(\frac{W}{F}\right)\left(\frac{1}{C_{L\,to}}\right)\left(\frac{1}{\sigma}\right) \quad \text{(F-1)}$$

where the terms have their previous meanings, except that C_{Lto}, is the take-off lift coefficient (which may be assumed to have a value around 0.75 C_{Lmax}). The take-off distance is shown in Fig. F.2 as a function of K_S, which neglects the thrust loading term W/F. The term has been used in the determination of the curve, however, by using typical state-of-the-art values. It should be noted that σ, the relative density, varies with altitude and temperature, as does thrust.

The aeroplane must be designed so that 0.75 C_{Lmax} can be obtained during the ground run. From Fig. F.2, knowing the field length and the aerodynamic properties of a design, the thrust loading can be determined for a number of climatic conditions. In the case of a propeller-driven aeroplane the thrust loading may be converted to power loading, W/P, from Eqn (7-6), where

$$\frac{FV}{550} = \eta Php \quad (7\text{-}6)$$

Where there is no component of thrust in the lifting plane the velocity may be taken to be 0.7 of the take-off speed at 0.75 C_{Lmax}. The calculation of thrust and power loading must, of course, take account of engine failure on take-off. However, when a component of thrust augments the wing lift of a military aircraft this condition cannot apply.

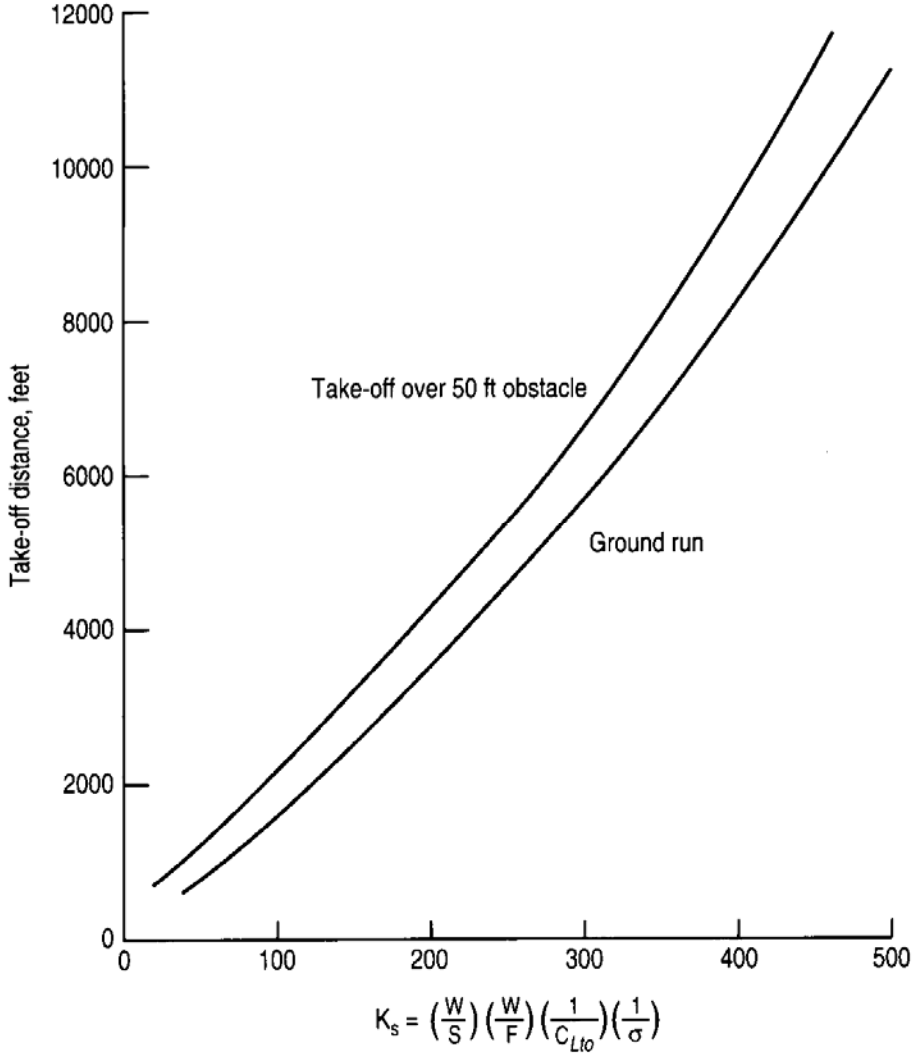

Fig. F.2 Take-off-distance chart.

Take-off distance is usually specified to clear an obstacle of a given height (35 ft or 50ft) and there is a difference between ground run as such and take-off distance. This is included in Fig. F.2 for a 50ft obstacle. In order to generate take-off lift early the COIN aeroplane had much of the wing span lying within the propeller slipstream. This necessitated short wing spans quite apart from the carrier lift requirement, and in most cases design for the lowest possible wing loading also led to parallel chord wings with little or no taper. Slotted flaps were used for high efficiency on take-off and landing.

F.2 STOL: Rockwell (originally North American) OV-10A Bronco

The agile and small OV-1OA (Fig. F.3) was the response by North America to the Tri-Service specification for a Light Armed Reconnaissance aircraft, of 1964. It was designed for brush-fire wars and counter insurgency, COIN, operations and the first aircraft flew in 1965. It was used operationally in Vietnam, mainly on Forward Air Control (FAC) duties, and shows particularly well what this book is about.

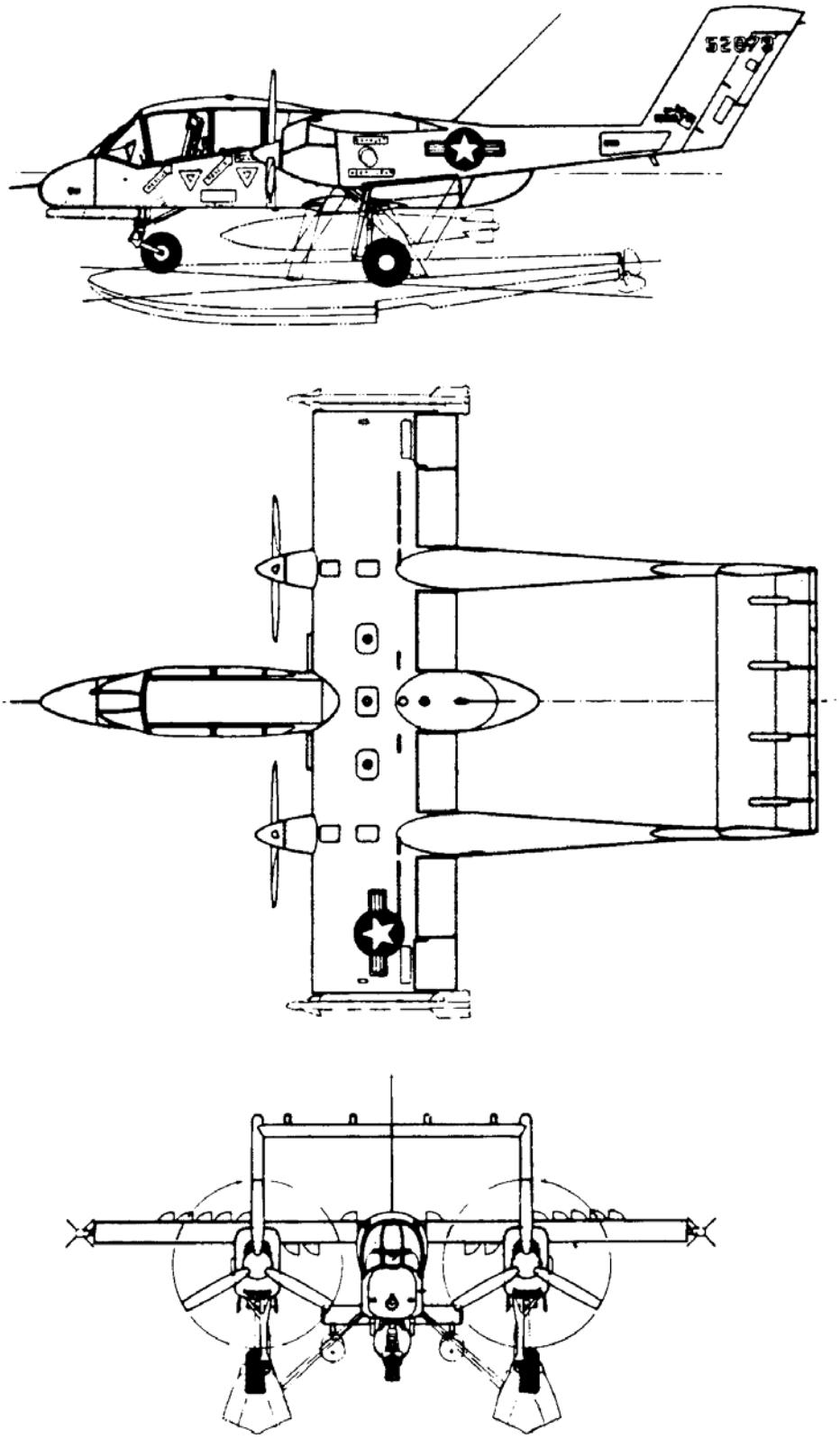

Fig. F.3 The North American OV-10A. The aeroplane reveals technical features which summarize neatly what is needed for the task. Technology advances but the physical principles remain.

The aeroplane is interesting because of the way it achieved its shape. It was designed to be relatively inexpensive for its capability, and simple. It is said that between 30 and 40 different concepts were studied initially, covering some 250 design points. A biplane offered the smallest and most compact arrangement, with the least complexity, but fell short of the overall requirement in other ways. When operating from a sod runway the OV-10A was then claimed to take-off after a run of under 400 ft and clear a 50ft obstacle in 800 ft, at a maximum take-off weight, MTOW, of 8600 lb. The figures correspond with power and wing loadings of 65 lb/hp and 40 lb/ft^2, respectively. The maximum take-off weight was, without STOL capability, 13300 lb, corresponding with a wing loading of 61 lb/ft^2. A typical combat mission lasted 4.5 - 5 hours, for which a 230 US gallon overload tank was slung on the centre-line, under the fuselage.

Noteworthy is the long-stroke undercarriage for operation from rough airstrips, and the large amount of

wingspan swept by propwash, and flapped, for STOL. The dorsal strakes ahead of the fins suggest that the Bronco once had directional problems, in spite of the short, plank, wing planform. This could have been due to the combination of high power and large fuselage area, with tandem seats, ahead of the plane of the propellers. Keel area forward of the **CG**, as we have seen, is destabilizing. There is provision for floats on the drawing.

The aeroplane now has night-attack equipment and was used over Iraq in Desert Storm (1991). It is reported as having been operated by the United States Marine Corps well into the 1990s, some 30 years after its first flight. The current MTOW is 9908 lb and the ground run is said to be 740ft. Overload weight is 14,444 lb. The engines are two 1040 shp (775.5kW) Garrett G-420/421 turboprop units.

F.3 The wide speed range (VSTOL/STOVL WASP)

Some years ago the author was involved in the investigation of a number of designs of VSTOL aircraft, one in particular intended to live in the battlefield, with the flexibility of the helicopter. The specification was for a wide speed range VSTOL/STOVL aeroplane, 'able to live next to the colonel's tent', carrying 4000 lb bombs, with a radius of action of 250nm at sea level and a maximum speed not less than M = 0.8. The fuselage had to accommodate an alternative load of 10 soldiers. Because of fighter opposition the pilot was required to pull 7g when flying at maximum combat speed. At low speeds it had to match a rigid-rotor helicopter, which could pull about 2.5g.

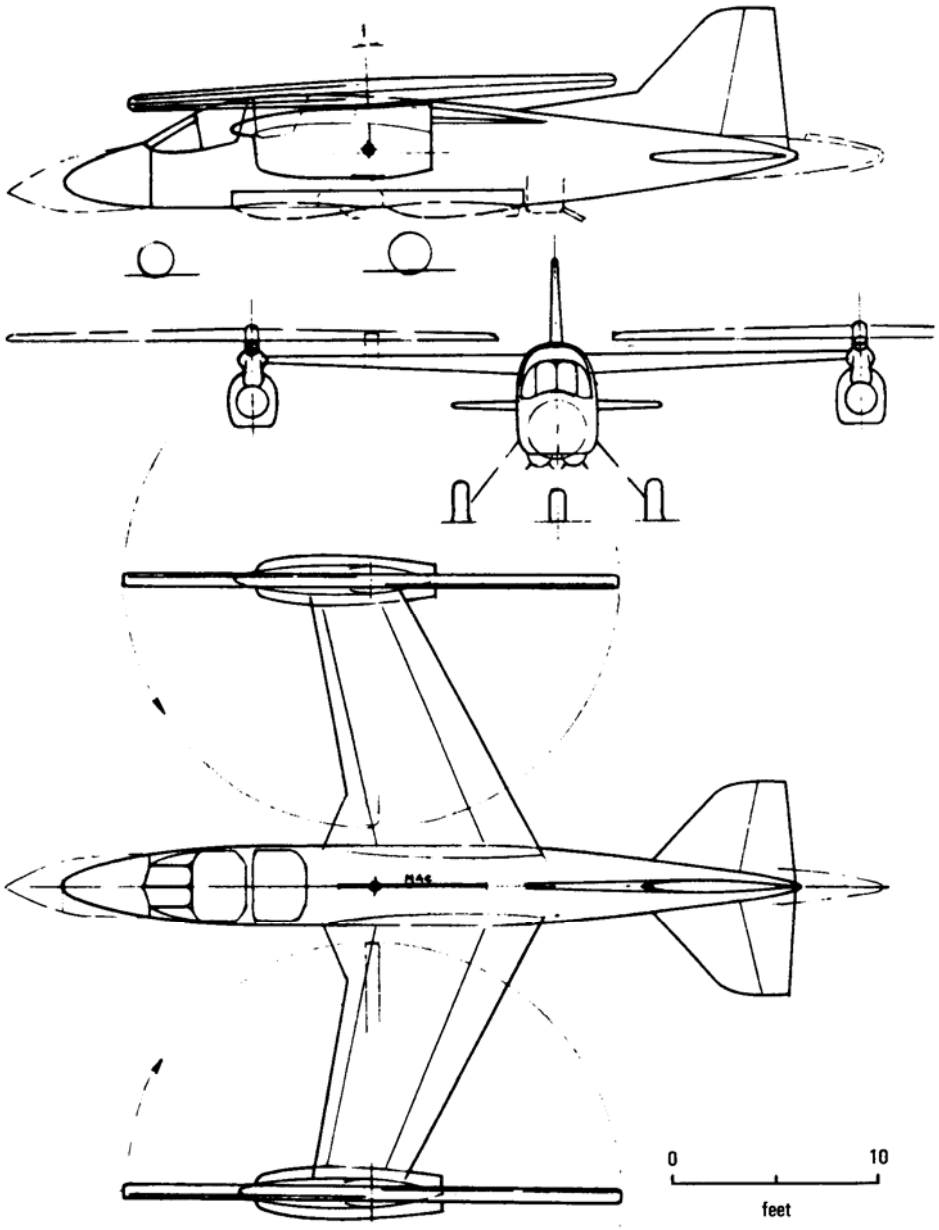

Fig. F.4 Wide speed range project (1967), M = 0 - 0.8 with 4000 lb weapon load.

The aircraft shown in Fig. F.4 was draughted by the author as a yardstick against which to compare the claims of competing manufacturers. In some ways, with its bomb load and weighing around 25000 lb it could have been a late 1960s VSTOL equivalent of the De Havilland Mosquito (Fig. 6.25).

Among the various lift devices available was a 'barber's pole' rotor, incorporating boundary layer

control, designed by the then National Gas Turbine Establishment (now DERA) at Pyestock, near Farnborough. Each blade was hollow and of elliptical section. Air tapped from the engine compressors was blown tangentially downwards from slots along the blade trailing edges. This generated a lifting circulation around each blade with the rotor turning.

The installation consisted of paired two-bladed rotors, making four blades in all for each engine, which folded along the wind scissor-like, one on top of the other. They were driven by a Rolls-Royce Adour engine at each tip of the forward-swept wings. In theory, the system had powerful lift potential. The engine exhausts provided boundary layer blowing and propulsive thrust. For hovering, exhaust gases were diverted through turbine discs in the bottom of each nacelle. These drove the rotors via gearboxes with a 32:1 reduction ratio which weighed almost 1 ton each.

F.3.1 Major problems

The rolling moment of inertia, due to engines, gearboxes and rotors at the wing tips was high. This would have made the aeroplane sluggish compared with current fighters when rolling into and out of turns with rotors stowed. The nearest aircraft in a similar class was the later Bell/ Boeing V-22 Osprey, for the USMC. Heavy-lift performance was greater than that of equivalent helicopters and, with rotors stowed, the speed would have been faster than the Osprey. Major difficulties were high transient drag, loss of airspeed, loss of maneuverability and increased vulnerability when stopping and stowing the rotors, and when un-stowing and accelerating them again for rotor-borne flight. The aircraft would also have been noisy, a penalty of blowing air through slits. Complicated cross-ducting was needed to cope with asymmetric engine failure.

(picture)
Plate F-1 Bell/Boeing V-22 Osprey, a multi-mission tilt-rotor aircraft. It can lift 9 tons in one mode, has a speed range of 0 - 300 knots, and a range of l200nm. Its origins lie broadly in a set of requirements similar to those of the wide speed range WASP in Appendix F.3. A more streamlined civil transport version is likely.

Swept-forward wings were to provide improved drag characteristics at high subsonic speeds (Fig. 6.4), while rearranging the fuselage frames, wing-root joints and engines to place the **CG** and lift in the correct relationship.

In spite of ability to lift heavy loads, hover and fly fast, costs of research and development would have been high. The aeroplane would not have been as agile as the Harrier later proved to be.

In an attempt to reduce costs, a smaller version was conceived, shown in Fig. F.5. It was a two-seater, about the size of the single-engined and small Folland Gnat, but it needed four Orpheus engines. Two engines generated exhaust gases which fed the circulation system of the rotors, and discharged through a turbine wheel at the bottom end of the rotor-shaft, which turned the rotor. Two separate engines were used for propulsion. There were dangers of gas and debris ingestion on the ground.

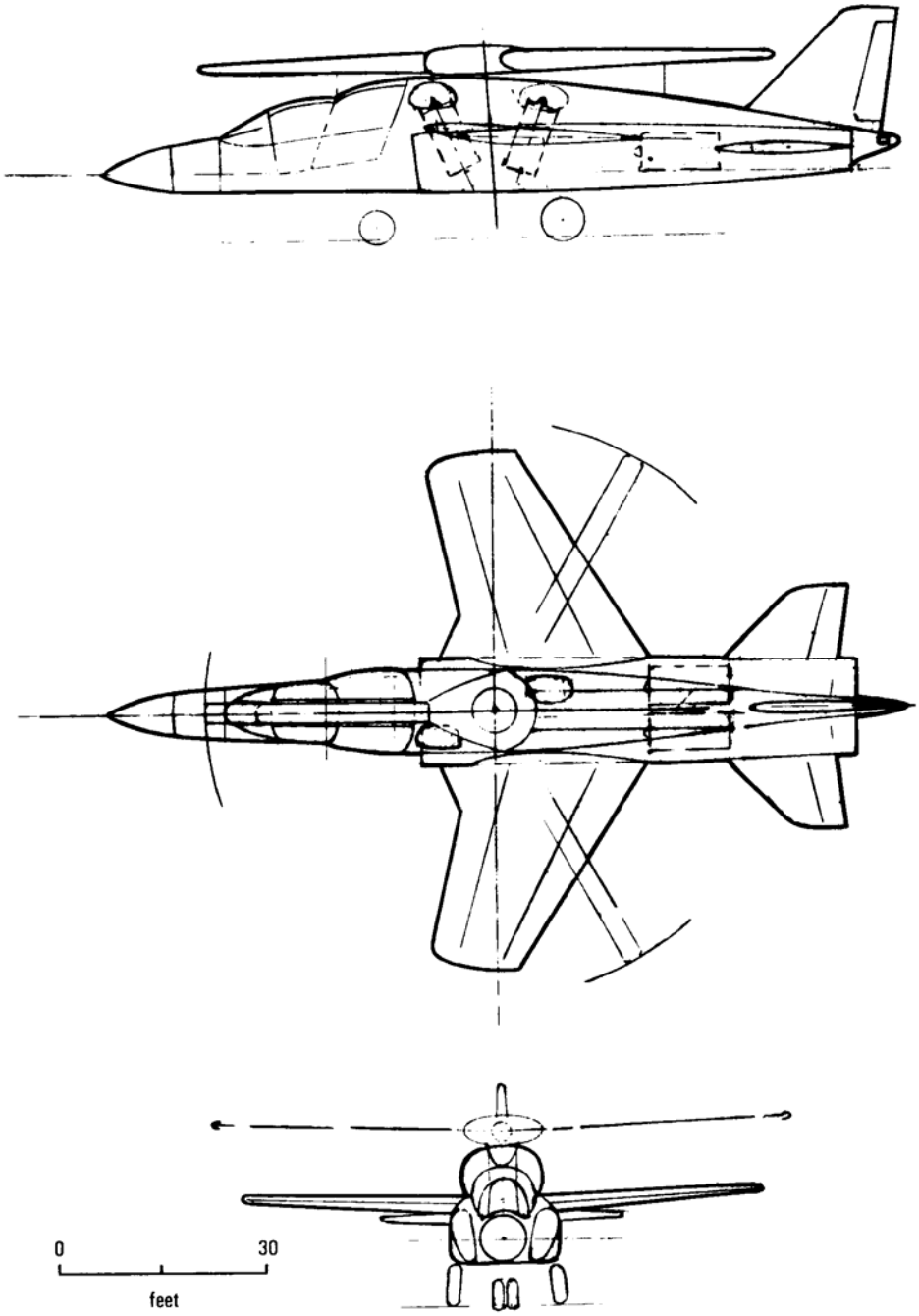

Fig. F.5 Smaller wide air speed aircraft (1967). Intended for M = 0.8 with two crew, rockets and grenade launcher. Noisy, and with many problems.

Of the two, the smaller aeroplane was the least promising. The three-bladed rotor would have been awkward to stow, acting as a powerful air brake. A scissored four-blade rotor system, like that of the larger WASP, might have been a better technical arrangement. When stowed for cruising the lift engines would be shut down. When needed frequently the lift engines would be idled. This meant that they would then either have to be relit each time the pilot wanted to use the rotor; or a strong and heavy clutch would be required to bring the rotor back on-line.

How could such an arrangement be achieved simply and reliably? The pilot would throttle back the lift engines to feather the rotor, but what next? Would it be better to give him the separate task of then feathering the rotor by hand, or should it do so automatically below some predetermined lift-engine RPM?

Attempting to translate from high-speed, wing-borne flight to the hover could also be fraught with difficulty if one lift engine failed through fuel starvation, or was knocked out in combat, or if the automatics failed. The pilot would be faced with a considerable work load in an emergency.

The aeroplane was technically complicated for its size and for the small payload carried. Reliability was dubious. For operation from unprepared surfaces the undercarriage geometry was critically narrow. Damage done to the engines in combat could have left the crew poorly placed without circulation control, in an aircraft which would touch down fast and roll over with ease. Evacuation in flight by means of ejection seats was a problem. The crew could not eject upwards because the rotor was in the way - unless jettisoned explosively. Nor could they eject downwards, as their operational mode was low-level, close to hidden in the 'nap of the Earth'. The only way they could abandon the aircraft was sideways - one to port, the other to starboard - with

the risk of snagging engine air intakes, wings and tailplane, always assuming, of course, that enough height then remained in which to deploy their parachutes.

The WASP ended as many other projects which seem like a good idea at the time. When advantages are weighed against the difficulties, their consequent disadvantages and the cost of attempting to overcome them, a project is better abandoned in good time. Don't destroy the records though, an advance in technology might one day warrant its revival, in a better form.

Appendix G Ram-wing (Ekranoplan, GEM and WIG)

In Section 5.2.6 we examined the physics of flight in ground effect, while pointing out that all aircraft experience the cushioning of air between ground and wings (and rotors) on take-off and landing. There have been many experiments over the years, and a number of relatively small machines have been built to exploit the phenomenon in Germany, China, Australia and the USA, for example.

Some of the most significant developments for our purposes are those in Russia, called Ekranoplan, the research being carried out by civilian institutes and military design bureaux. In this appendix we shall look briefly at three concepts. The first touches the work of the Alexeyev Central Hydrofoil Design Bureau. The aircraft are large and have heavy-lift, go anywhere flat, capability. They use vectoring engines for generating a mixture of blown super-circulation and an air cushion, for take-off and landing. In cruising flight they use wing lift and the same engines for propulsion.

Note: Professor Rozhdestvensky's definition of an Ekranoplan features a wing of relatively small aspect ratio, endplates (floats) or skegs, and special gear for take-off and landing. It stems from the Russian word *ekran*, meaning screen or ground. He also advocates the term GEM (ground-effect machine) which this author prefers to WIG or WIGE (wing-in-ground-effect). They are fashionably flabby terms which make no proper distinction between the physics of wings designed to work in ground or surface effect, and those of aeroplanes which do so in the normal course of events.

The second project in this appendix was a brute-force ram-wing hybrid for an attempt on the world water-speed record, for which it had to exceed M = 0.5.

Third is a project to explore operational applications of experimental model work in the UK, which combines twin-hulls or floats with a separate air cushion at low air speeds, and wings when cruising. For this additional engines are needed to generate the air cushion. It is for heavy-lift and long-haul public transport operations, primarily between the UK and the Pacific Ocean.

(picture)
Plate G-1 (a) The 140 ton Russian Orlenok Ekranoplan has two nose-mounted Kuznetsov NK-12 turbofans of 10 tons st each, to generate power-assisted wing lift; and a tail-mounted Kuznetsov NK-12 contra-turboprop for propulsion (the same type as in the Tu-95 Bear). The unit is reported to produce 15.5 tons st. It is mounted high to protect it from spray and a build-up of salt. (b) The Alexeyev Caspian Sea Monster' Ekranoplan of the 1970s, which to date still appears to be the largest of all, preceded the Orlenok. The author has no confirmed information on this machine, other than that the bank of 8 turbofan engines can be vectored for take-off and landing. Both show clearly the spray patterns from the tip vortices; and the very low altitude of flight, for which a computer coupled with a high-order flying control system must be essential, if precision is to be maintained over long periods, and Pilot Induced Oscillations (PIOs) avoided.

G.1 Regulation

A foreseeable difficulty surrounds civil airworthiness regulation of how such craft designed for public transport operations at very low altitudes are to be operated. As this is written the main interest in ground-effect craft comes from the maritime side: ship operators and builders, manufacturing the craft in shipyards. The standards are not the same as those set and maintained with aircraft, because (perhaps wrongly) aircraft made to operate exclusively in ground effect are regarded more as ships, and are therefore not the same kind of animals as aeroplanes.

Yet, fitting wings to a craft to enable it to fly transforms it into an aircraft which, in the UK, subjects it to the Air Navigation Order (ANO). A powered aircraft lifted by the cushion of air generated by dynamically ramming air beneath its wings, in motion at low altitude in the atmospheric boundary layer of land or water, then falls within the definition of the ANO Schedule 1 General Classification, as being a heavier than air, power-driven flying machine. If one also adds the words: 'with supporting surfaces fixed for flight', then technically it is an aeroplane within the definition of the *Glossary of Aeronautical Terms of the British Standards Institution*, given in the Preface.

Therefore, the author cannot see how one might transport several hundred passengers at airspeeds around 300 knots over the sea at the height of a two-storey house, unless precisely the same airworthiness standards apply as for a passenger aeroplane carrying the same load, but flying with less obvious risk of collision, several thousand feet higher at the same airspeed.

Flight at low altitude is one of the most proscibed of all phases, for obvious reasons. Takeoff and landing performance in particular is closely regulated for all public transport operations. The purpose of performance regulation is to ensure to an acceptably high probability that the space required for the flight should not exceed the space available. Numerically, the required probability of success must be very high, 1,000,000 to 1 (in shorthand, 10^6), and the probability of failing to do so very low, only 1 in 1,000,000 (or, 10^{-6}). Performance operating rules are essentially flight safety rules. They must apply to ensure that such an aircraft used for public transport is dispatched in the same way as any airliner, i.e. at an acceptably safe weight (mass), so that the captain/pilot will only be called upon to make critical performance decisions under pressure in the event of unlikely failures.

Unlikely is emphasized because performance requirements are concerned with probabilities, and performance calculations based upon them suffer scatter caused by:

(1) *Operational variables* which can be measured or 'forecast', such as weight, temperature, sea state (dependent upon topography, tidal flow, depth of water, wind and fetch) and vulnerability of take-off and landing areas to local pollution, e.g. floating debris.

(2) *Statistical variables* which are largely technical and subject to everyday variations: engine power or thrust and mean time between failure, climb speed and gradient. These too are also affected by sea state as, for example, when the configuration of an engine installation makes it vulnerable to a 10^{-4} rogue wave which causes propeller failure, or a flame-out, increasing risk and reducing safety from 10^{-6} to 10^{-4} (see Figs G.1 and G.2).

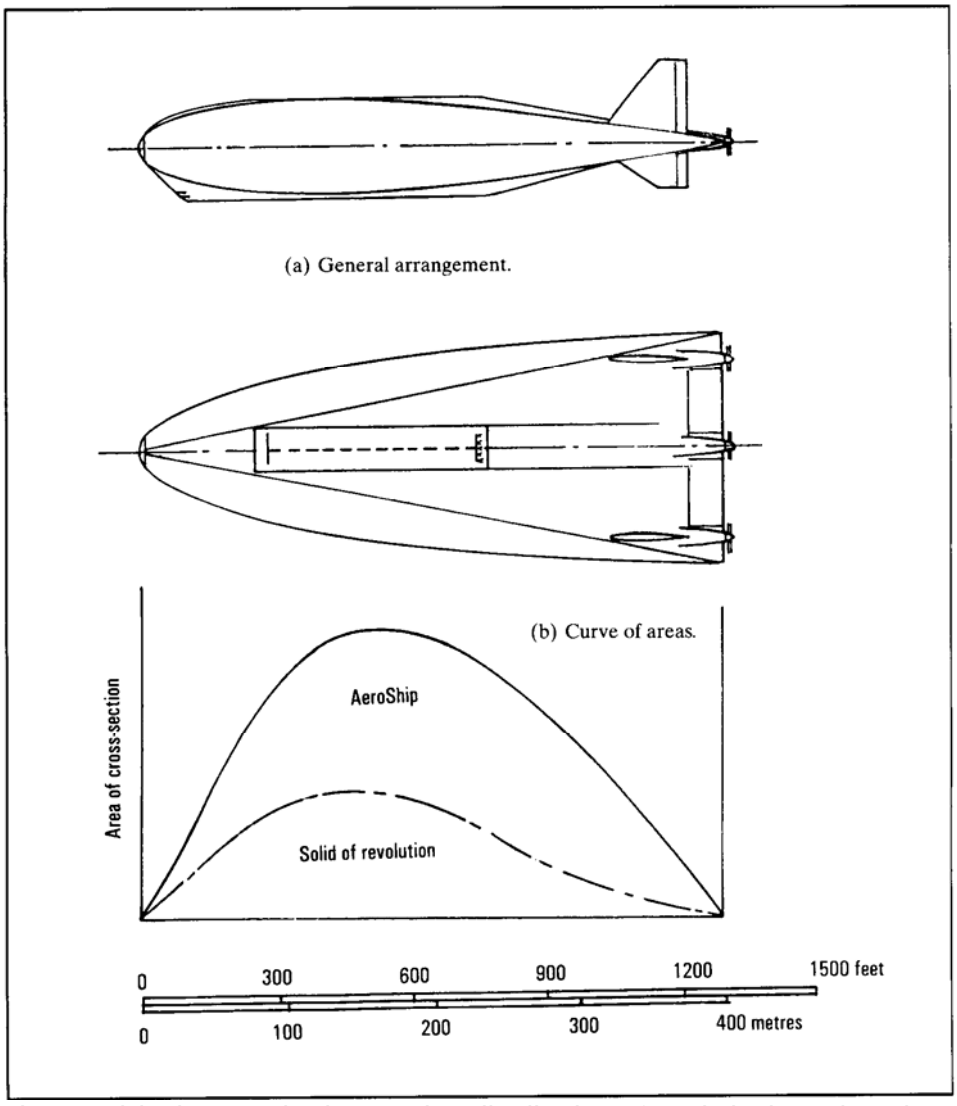

Fig. G.1 (a) The standard Gaussian distribution of statistical results. The significance is that in the case of, say, take-off distance, it shows that between the points of contraflexure (±SD) 68.3% of pilots will lift off in the required distance, with a small tolerance either side of the mean. Here that
tolerance = ± 1.0 SD = ±3% x take-off distance. The curve also tells us that 1 in 10 will exceed 1.3 SDs; 1 in 100 will exceed 2.3 SDs; and 1 in 1000, 3.1 SDs. If we want only a remote, one chance in a million of exceeding the take-off distance, either by lifting-off prematurely, or over-running the distance, that will correspond with a tolerance of about 5 SDs, as shown in Fig. G.1(b).

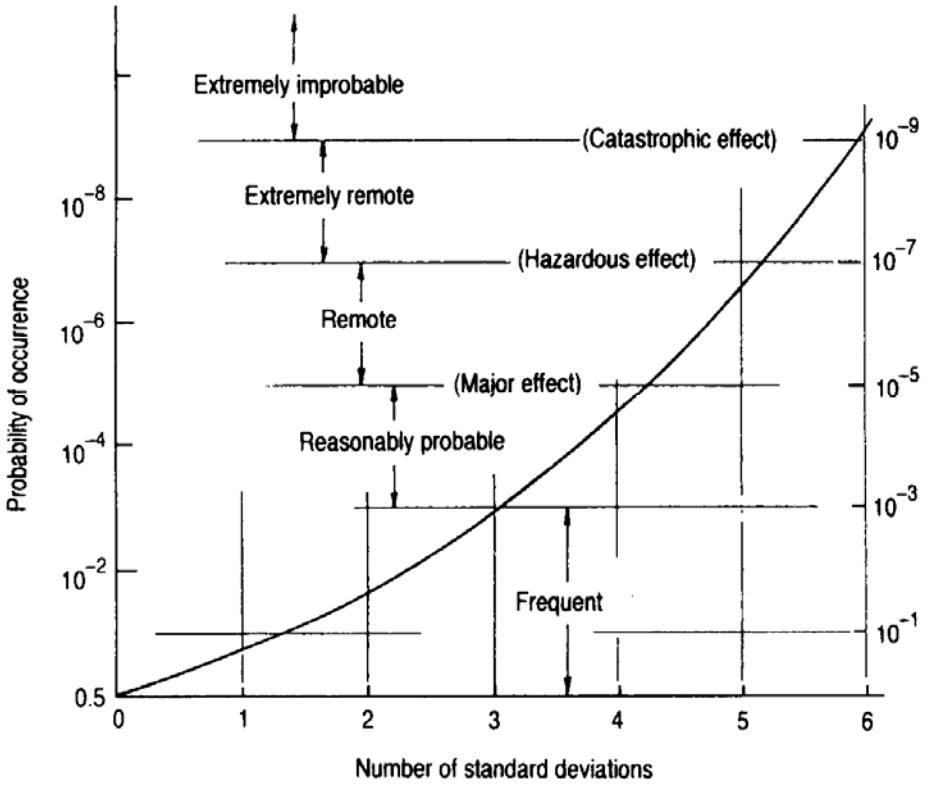

Fig. G.1 (b) This curve is derived from that shown in Fig. G.1(a). In public transport operations we work to achieve remote and extremely remote probabilities of catastrophe. That is why we talk of 10^{-6} and 10^{-7} risks, i.e. one chance in a million, or a once in ten million probability of failure to take off or land safely on a flight.

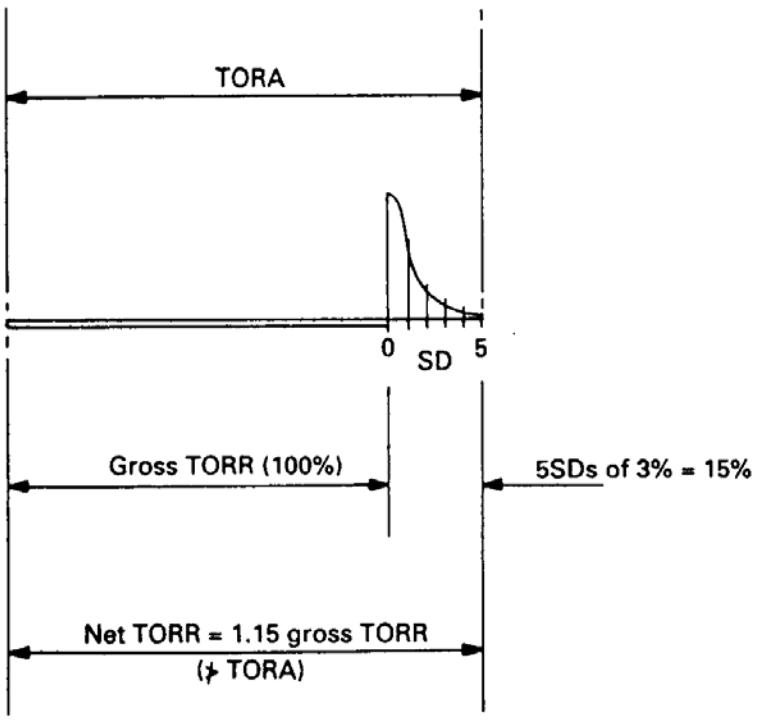

Fig. G.2 So that the take-off run required for the aircraft (TORR) will fit the distance available (TORA), given the weight, configuration, weather and surface conditions, a tolerance (called a factor) is applied to the average distance to lift off. The average distance is called the gross distance. To leave room enough to fail on no more than one take-off in a million we add as that factor. 5 SDs = (5 X 3%) = 15%. Take-off from water can pose a more complex problem than from a paved runway, but the same principles apply.

For our purposes the cruising altitude of a ram-wing, Ekranoplan or GEM is around one-tenth of the square root of the wing area (Eqn (5-11c), Fig. 5.12(d)). With the span and chord roughly comparable in order of magnitude, it follows that for practical transport operations in sea state 5 (rough), when significant wave height may exceed 2.5 - 4.0m (8 - 13ft), the aircraft must be large. Small ones may be useful in sheltered waters and along rivers. However, as sheltered waters also tend to be restricted, traffic management will present problems, as it could with the larger craft in crowded sea areas and choke-points (like the Straits of

Dover, the Skaggerak and Kattegat, and Malacca Straits). It follows that routes and cargoes need careful matching.

One thing is certain. If ground-effect craft are to carry out large-scale public transport operations, new, integrated, joint air-sea regulatory authorities will be needed on a global scale.

G.2 Longitudinal stability and control in and out of ground effect

Craft intended to operate in ground-effect need special attention to longitudinal stability and control. Tails are larger in tail volume and aspect ratio than those of conventional aircraft and are mounted high, with narrow aerofoil chords, to isolate them from ground-effect as far as possible.

There is a marked forward shift in the aerodynamic centre and lift resultant as an aircraft leaves the ground, which causes a nose-up pitch change, which the pilot of a conventional aeroplane trims out. The origin of this is that on the ground the centre of pressure of the air cushion beneath the aircraft acts somewhere near the centre of the cushioning area, not far from the half mean chord of the wings. For ground-effect aircraft this must be the location for the **CG** (unlike that of an aeroplane designed to run along on wheels until it lifts off).

As the aircraft accelerates the angle of attack is increased for lift-off. Aerodynamically generated forces grow while the cushion pressure collapses. The aerodynamic centre of pressure of the wings, as we have seen in Fig. 5.8(c), moves much further forward, nearer one-quarter to one-third of the chord from the leading edge. The resultant centre of all pressures is then ahead of the **CG**, causing a nose-up change of trim.

The tailplane and elevator are needed to counter the nose-up moment, by shifting the ac (neutral point) rearwards again to a position aft of the **CG**, so providing the **CG**-margin needed for positive longitudinal stability. Compare this situation with the general explanation given by Gates (1940) in Fig. 8.8.

The size of the stabilizer depends upon whether the aircraft is to fly only in ground effect (IGE), or out of it (OGE). Tail volumes (Tables 8-1 and 8-2) are slightly larger than those of many transport aeroplanes, to cope with the large shift in the ac on take-off; and when changing height, for example when clearing an obstacle.

G.3 Alexseyev Central Hydrofoil Design Bureau - Lun, Spastel and Orlenok

Alexseyev is credited with some ten prototype Ekranoplan (his name for the ram-wing, or ground-effect vehicle) the largest of which, the Orlenok and Lun, are said to have neared operational status. Lun was nicknamed 'Caspian Sea Monster' in the West when it appeared. It was proposed as a search and rescue craft after the disastrous loss of the submarine Komsomolets in 1989, after a nuclear accident. It was reconfigured as Spastel, with a capacity of 500 persons, a fully equipped operating theatre and decontamination facilities.

Figure G.3 is a model-maker's drawing of the Russian Orlenok (1992), showing this aircraft to have a span of 31.5m (103.32ft), length of 58.0m (190.24ft) and height with propellers turning of 129m (42.3 ft). Information is somewhat spare, but Orlenok uses two turbofan engines to provide super-circulation for the wings.

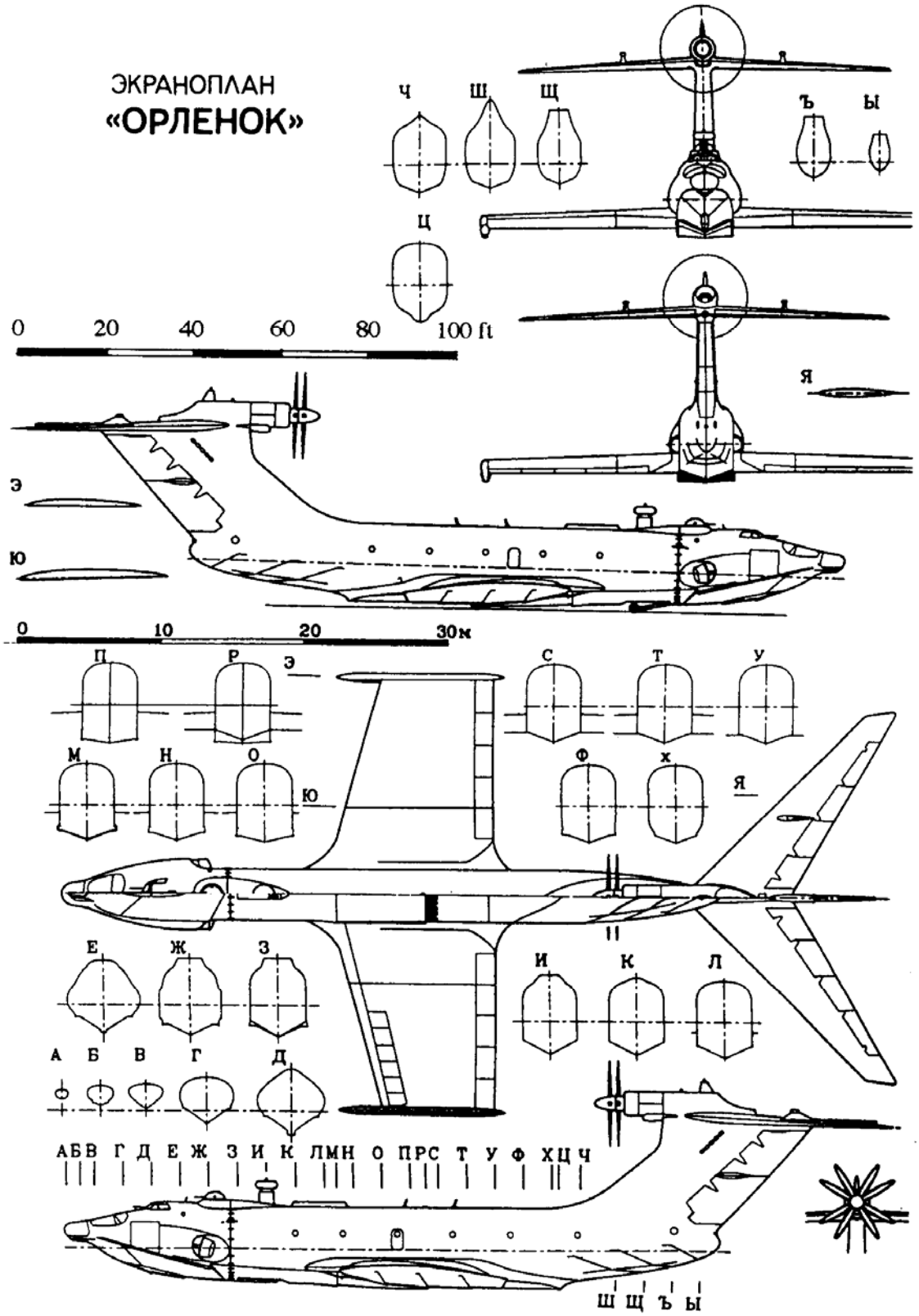

Fig. G.3 Russian Alexseyev Central Hydrofoil Design Bureau Ekranoplan, Orlenok. Turbofan engine exhausts are deflected beneath the wings to provide cushion-lift, like a hovercraft, and thrust. The turbine contra-prop is for propulsion. (After Russian aeromodeller's magazine, AX, AeroXobbi (1992).)

The system is said to generate a lift force ten times greater than the thrust of the turbofans, even when the craft is almost stationary. Power loading and thrust loading are said to be high. The aircraft is estimated to weigh about 140 tons (308,000 lb). The two lift-generating turbofans are Kuznetsov NK-8-4K units, each of which develops 10.5 tons static thrust (23,100 lbf st), making the thrust loading 140/(2 X 10.5) = 6.67. For speeds of 500km/h (270k, or M = 0.41) this lies usefully close to and within the 'eyeballed' extended upper boundary of Fig. E.1(a). The wing loading is about 0.043 t/m^2, or 95 lb/ft^2.

Propulsion of Orlenok in the cruise is by a tail-mounted, counter-rotating turboprop installation, a Kuznetsov NK-12-MK, which by producing 14,795 ESHP is rated as the most powerful turboprop engine in the world. With a take-off weight of 308,000 lb, the equivalent power loading is 20.82 lb/ESHP, well beyond the

upper boundary of Fig. E.1. As an average value for a turboprop aeroplane is about 10 lb/ESHP (assuming ESHP = HP), the implication is that for the Orlenok class the (L/D) = (20.82/10) ~ 2.1 times that of an average turboprop transport aeroplane operating at the same cruising speed. As the average (L/D) of conventional aeroplanes is not far from 10 or 12. Orlenok, with an aspect ratio of a little over 3, appears capable of achieving a cruise (L/D) of 21 - 25 in ground effect.

The aircraft has a hydroski system beneath the hull for water take-off and landing, and a retractable undercarriage for support on the ground (but which does not appear to be adequate for take-off and landing on a runway). Loading of the cargo-hold is through the nose, which hinges sideways, aft of the turbofan exhausts.

The design of such craft almost certainly incorporates protective devices, like plenum chambers for water or debris separation, in much the same way as helicopters designed for operations at sea. Provision is needed for docking, repair and maintenance facilities, loading and unloading, and escape in an emergency. In this respect large Ekranoplan are akin to amphibious flyingboats which, like hovercraft, are able to drive up slipways, where facilities exist to do so.

It follows too that, apart from aero-hydrodynamics, in terms of stability in the air and on water, and seakeeping, structural design must incorporate materials of high strength and stiffness to cope with impact with water in a variety of sea states. Special protective coatings are applied to airframe and engines to counter the adverse corrosive effects.

G.4 Ram-wing hybrid for world water-speed record (M > 0.5)

Some years ago the author's company was engaged in a design study for an attempt upon the world water-speed record, which stood at 329 mph (529 kph) in 1979 (Fig. G.4).

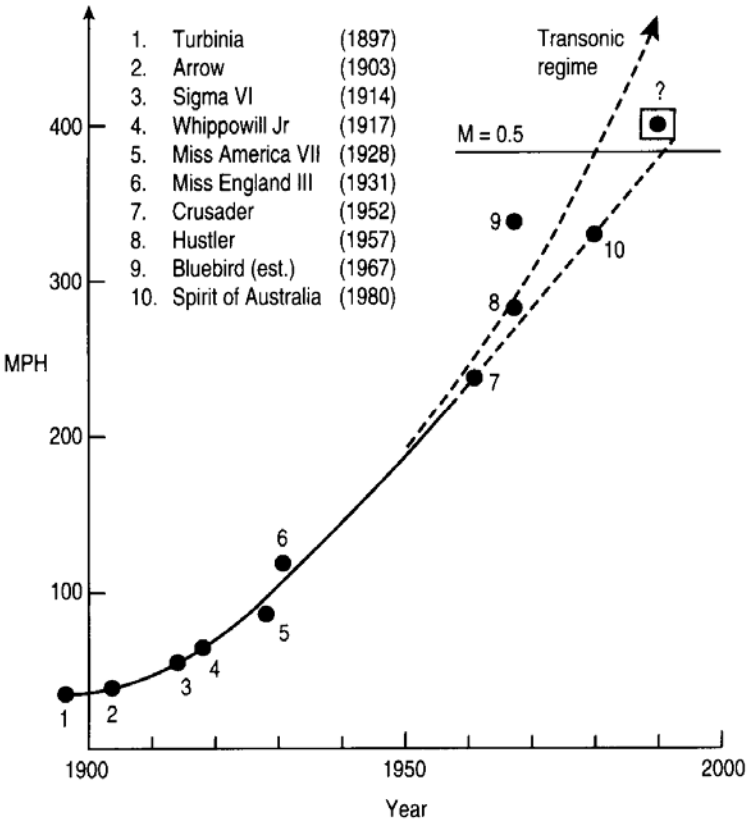

Fig. G.4 World water-speed records using conventional planing craft. (Author, courtesy of Royal Institution of Naval Architects, International Symposium on High Speed Vessels for Transport and Defence (London, November 1995).)

If the technological trend was maintained then any attempt to reach higher speeds had to aim for at least 380 mph or 330 knots. To exceed this speed by a high enough margin to allow for errors in measurement meant a design which, in air in the International Standard Atmosphere, would exceed one-half the speed of sound. The aim was for a Mach number well in excess of M = 0.5 (560 ft/s, or 171 m/s).

In terms of Mach number we make the following distinctions:

low speed	$M \leq 0.2$
subsonic	M = 0.2 - 0.9
transonic	M = 0.7 - 1.5
supersonic	$M \geq 1.0$

Analysis of past record-breaking accidents showed that many were caused by inability of high-speed

craft to cope with departures from water to air and back again. Lacking stability in the air they returned to the water at high speed and the wrong angle. Of control authority in air there was none. We decided, therefore, that straight cross-fertilization between aeronautical and marine-craft design and technology was the wisest solution, with propulsion by turbojet or turbofan, using air (not water) as the prime-mover.

One may argue that the Union Internationale Motonautique rules apply to boats: vessels which are racing or record-breaking in the displacement regime, and not to aircraft. However, 'a boat' was not precisely defined in the rules which were then to hand, nor could such motion be confined to the displacement regime alone (a flyingboat, for example, spends little of its working life in the displacement regime). There appeared to be no requirement other than to remain in contact with the water while attempting to break the record.

G.4.1 Control and stability

Unless a craft is designed specifically for wave-piercing, then at speeds corresponding with ($\frac{V}{L^{0.5}} = 1.0$) in knots and feet of waterline length, respectively (the non-dimensional form is the Froude number, $\frac{V}{(gL)^{0.5}}$, a body supported hydrostatically increases its trim-angle and its angle of attack to the air dynamically as it accelerates and starts climbing its own bow-wave (this we saw in Chapter 10). The displacement regime is left behind when the hull reaches its hump-speed, beyond which it planes, skipping dynamically along the surface. Any disturbance in pitch, on meeting a wake or a wave, causes the hull to skip more and to spend longer off the water than on or in it.

The situation is dangerous. The combination of brute force, nose-up trim change and forward shift of **ac**, can lead to a departure, nose-up or nose-down, or to porpoising, driven as a pilot-induced oscillation (PIO). It is a roughening ride which makes no more sense than to attempt the land-speed record on cobble stones. Not only is the effect structure-shattering, but one runs into acute problems with the effects of vibration upon the eyeballs and other organs.

A vessel which combined the aerodynamic effectiveness, control and stability of the ram-wing aircraft in air, with an additional pair of stabilizing and control surfaces running in water, appeared a more rational solution. The latter surfaces were to be super-cavitating: a skeg mounted at the **CG** and a rudder piercing the surface of the water throughout.

Compressibility effects at the transonic Mach numbers then within reach constituted a threat to stability, and to the authority of aerodynamic control surfaces. Once out of the water and riding straight and level on a cushion of air, the dramatic reduction in drag - to one-third of that encountered on water at the 'hump' - could leave enough thrust in hand to achieve high-subsonic, or even transonic, speeds. One could be faced with a loss of effectiveness of flying controls similar to that encountered by high-speed aeroplanes in the 1940s, when they reached what was thought at the time to be a 'sound barrier', but this time in an aero-marine environment.

Height sensing was critical and involved high-technology sensors. The craft would be skimming the water at an altitude around 0.1 times the mean chord, say 1.5 ft (0.5 m), or less, and any pilot-induced oscillation would be catastrophic. At speeds around 600ft/s an unchecked change in angle of the flight path at a rate less than one-fifth of 1^0 per second meant either hitting the water, or leaving it completely. The fastest human reaction still put manually operated flying controls out of the question. The craft relied upon an advanced computer and autopilot technology of gyros, with high-order 'active' aerodynamic and hydrodynamic control surfaces operated electronically (FBW) and with optical fibers (FBL).

There was the problem of ablation of the skeg and rudder surfaces by cavitation - bubbles vaporizing out of the water - the destructive effects of which are severe enough rapidly to wear away the material. Special alloys were needed of superior strength and stiffness. There must be no risk of flutter. Even so, the team could have been forced to change the rudder and skeg after each high-speed run.

The location and design of effective air brakes was crucial. Usually there is a change in pitch attitude when air brakes are deployed, but the operating height of the craft turned the slightest attitude change into a potential hazard. Tests in a wind-tunnel and also in a water-flume, its hydrodynamic equivalent, were needed at an early stage.

G.4.2 Survivability: emergency escape systems

The high risk of the operation involved special considerations for pilot escape and survival, using an ejection seat and/or an escape capsule capable of life support if accidentally submerged, with equipment to link the pilot with the search and rescue services. Automatic override of the pilot was essential, the computer deciding in an emergency if and when the craft should be abandoned and the pilot ejected. Equipment with such powers of discrimination was expensive. Development costs were high, to shorten to a minimum the time

needed to react in an environment that could be changed by a ripple or a puff of wind.

Getting the pilot back in one piece if something went wrong was a harder technical problem than that of achieving the speed. Harnessing arrangements were critical. Kinetic heating raises cockpit temperatures and increases discomfort as the square of relative airspeed. The adiabatic temperature rise, ΔT, is given in terms of the true airspeed, V, in mph by

$$\Delta T = \left(\frac{V}{100}\right)^2 {}^0C = \text{about } 15^0C \text{ at 390mph} \quad (1\text{-}9)$$

This rise increases the cockpit temperature to 30^0C or 86^0F, doubling that of a standard ISA day.

A zero-height-zero-airspeed ejection seat (which can also be fired under water) was the obvious first solution for escape in an emergency. It would introduce legislative problems for a private operator or a small company in the UK regarding the storage and use of explosives, on top of which the ejection-seat gun is, technically, a firearm. An automatic escape capsule with a parachute was a preferred alternative, but explosive separation would raise the same problems as did a gun for an ejection seat. A reaction time as short as 1 second would find the craft around 600ft (182m) further down track. One-fifth of a second, as mentioned earlier, would have the craft touching the water 120ft beyond the point at which the emergency occurred.

Parachutes need special care. Opening can be delayed fatally by damp, or be caused to fail completely by wetting.

G.4.3 Technical interpretation and estimates

Figure G.5 shows two shapes which were examined.

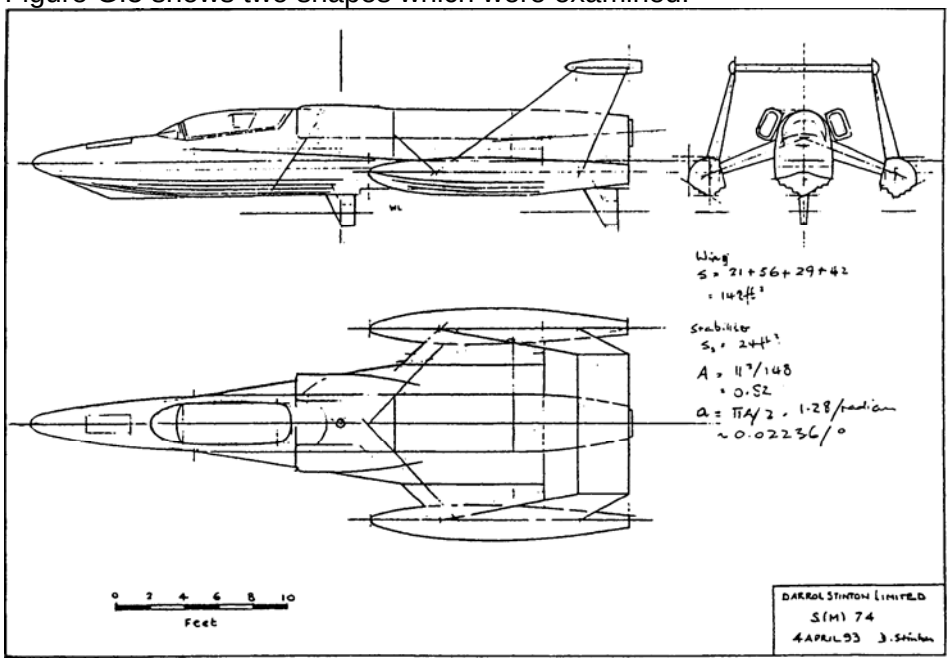

Fig. G.5 Layout of ram-wing project to reach transonic speeds above water, while hydro-stabilizer and rudder surfaces run in water. Their ablation is a major problem, as is precision of aerodynamic control and stability, without oscillations. (Author, courtesy of Royal Institution of Naval Architects, International Symposium on High Speed Vessels for Transport and Defence (London, November 1995).)

Both were trimarans with tails, as it was felt that this configuration provided the safest combination of lift, control when airborne, and stability. Cost estimates for both were high. To reduce these costs the second, integrated design, was dropped and a multi-modular hull devised, using the forebody of a former Folland Gnat jet trainer, combined with an engine-box based upon the BAe Hawk trainer (Fig. G.5). Both were mounted upon a central buoyant pontoon, stabilized by wing-tip floats.

The craft was a cross between a boat and an aeroplane. Contact with the water was to be maintained throughout by means of a surface-piercing skeg and rudder. As an aeroplane, operating in ground effect as a ram-wing, an (L/D) = 12 at an altitude of 0.1 x mean chord was expected. The multi-modular configuration produced the following estimates:

Weight
Empty = 3534 lb
Record run = 5784 lb with 2000 lb fuel and oil
Powerplant
Rolls-Royce Turbomeca Adour/F405 turbofan without reheat

Thrust (rated) = 5990 lbf
at M = 0.8 = 5800 lbf
Thrust/weight:
5800/5784 = about 1.0 at start of record run
5800/3784 = 1.53 fuel gone at M = 0.8
(in short it could accelerate while climbing vertically)

(1) Thrust loading = 1/(thrust/weight) and the above values vary from 1 to 0.65, which shows more potential than the last generation of transonic fighters (which had thrust-loadings of 1.8 lb/lbf (dry) to 1.3 lb/lbf (wet, i.e. with reheat)).
(2) Intake air to engine was via plenum chamber and water separator.

G.4.4 Conclusion

The project was shelved, but not for the formidable technical reasons. The most difficult problem from the point of view of the design team was that with so much thrust to spare, the craft would probably exceed the speed of sound. No-one knew what might then happen next at supersonic speed and a very low surface-skimming altitude.

From the point of view of an accountant, there appeared to be a limit to the technological benefits. It made little sense to expend a vast and costly effort on reaching a speed on water which no-one could ever attempt to use. There were areas of other disciplines in which precisely the same technologies might be explored more productively.

However, a record is like a mountain - to be climbed because it is there. That challenge has no echo in the flat statement of any economist.

G.5 Twin-hull Manta 1500: ram-wing with separate air-cushion system

The Manta 1500 is a feasibility study of a 'seemed-like-a-good-idea-at-the-time' large and long-range, heavy-lift flyingboat for freight, for import and export of vehicles and plant, electronic equipment and perishables. There is ample room for passenger seating and sleeping accommodation. A mechanically generated air cushion is captured beneath the centre-section. It is intended primarily for the shortest low-altitude route from the UK to the Pacific, avoiding hills and high ground. The top of the 'wish-list' of one potential operator is the ability to fly direct from the British Isles to New Zealand, over the flat North Polar sea-ice, with a nominal load of passengers and freight (say, 1% of gross weight), with the remaining disposable load as fuel.

Other routes include Africa, India and the Far East, via the Indian Ocean; and South America.

G.5.1 Operational requirements

Manta is the experimental project name given by its inventor for a twin-hull (technically, three-surface) ram-wing, with a hovercraft-type air cushion beneath the centre-section. The Manta 1500 explores his ideas, but it is modified to incorporate a deep centre-section, for payload-carrying in the same way as tried by Burnelli in the USA and Cunliffe Owen in Great Britain, before World War II. The centre-section has access to a capacious hold via doors in the leading and trailing edges. It has flaps fore and aft, which lower to form, together with the sidewall hulls, a chamber for the contained air-cushion, provided by turboshaft-driven pumps in each hull, with cross-over ducting in the event of asymmetric pump failure.

The operational requirement for the project arises from the following UK trade figures, obtained in late 1996 (1997 figures are understood to be higher):

Investment Income: 61.4% from other than European Union (EU);
Total goods and services: 51.4% to other than EU.

The figures show that trade with the market beyond the European Union is more vital to the UK than the EU. The primary growth area in the foreseeable future is among the nations of the Pacific Rim (Orient, Australasia, western North American seaboard, and South America). That is where the Manta 1500 project is aimed initially.

Figure G.6, which is approximate, shows that the shortest low-altitude route for a ram-wing aircraft to the Pacific is over the Arctic ice cap, via the North Pole. The direct route to Auckland, New Zealand, is around 10,000 nm. Dog-legging through Hawaii for fuel splits the near-direct distances to 5700 and 3500 nm, respectively.

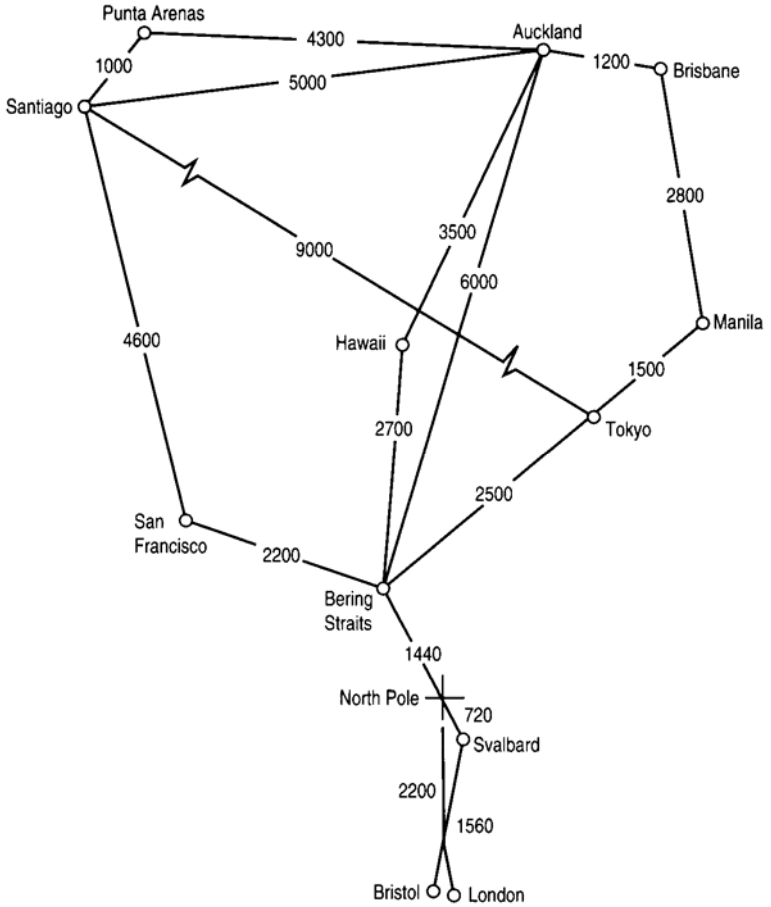

Fig. G.6 Low-level routes to the Pacific Rim from the UK. (Author, courtesy of Royal Institution of Naval Architects, International Conference. Wing-in-Ground-Effect Craft (London, December 1997).)

A broad OR might be along the following lines:

(1) To carry a 200 ton payload of up to 5 X 40 ton trucks, 4000 nm, with 10% reserves; to operate in sea state 3 (with design limit sea state 4).
(2) Cruising speed shall be not less than 250 knot.
(3) To avoid damage and loss of control from seabird-strike, or any other asymmetric loss of thrust through engine-failure, separate lift engines shall provide air-cushion lift.
(4) The wing shall be configured for cruise, while combining large capacity for carriage of awkward loads.
(5) Payloads shall be mixed between freight on a centre-section cargo-deck, with passenger accommodation separately for up to 2500 persons.

The first implication of this OR is a very large aircraft, weighing around 1500 tons (Fig. G.7). As the bottom of the centre-section defines the air-cushion area, with sidewalls and retractable flaps fore and aft, the configuration is twin-hulled. Centre-section scantlings are a compromise between lifting area and installed auxiliary power. Access to the central bay is by leading- and trailing-edge doors and ramps.

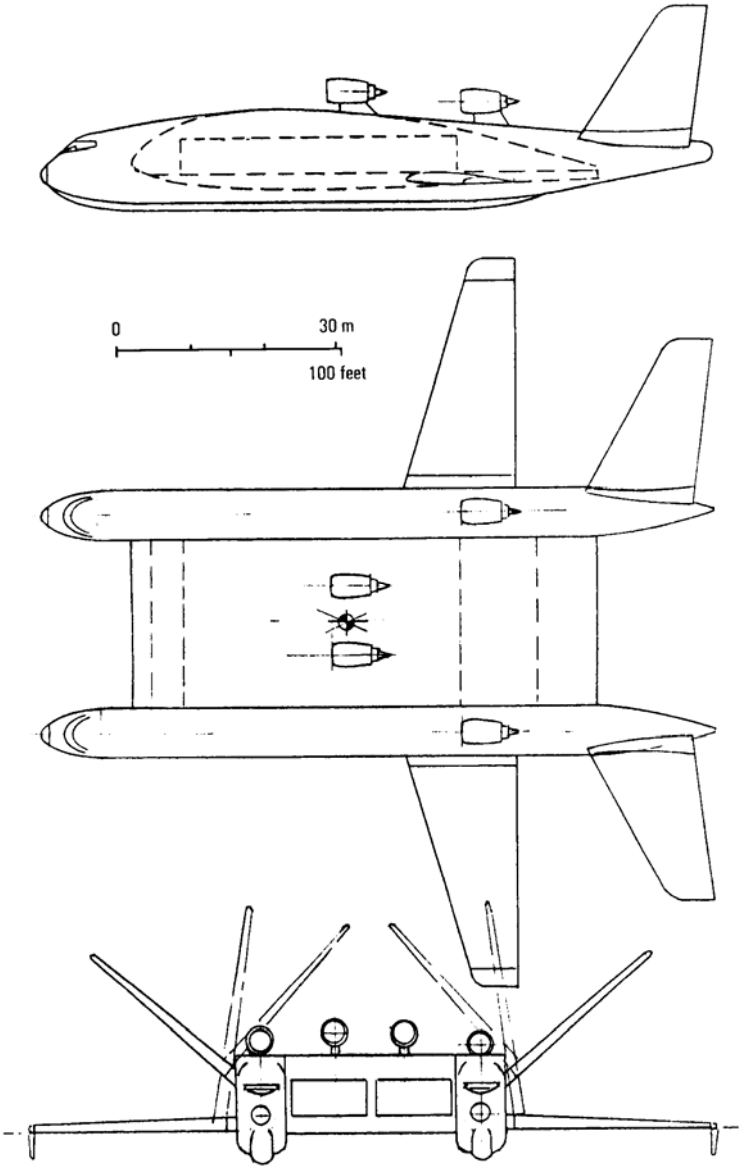

Fig. G.7 Ram-wing aircraft for global trade. The high risk of seabird-strike damage at low altitude leads to separation of the lifting and propulsion engines. The hulls have no planing surfaces, only hardened keels with pneumatic shock-absorption. With air-cushion lift there is little dynamic (running) contact with the water on take-off or landing, unlike conventional floatplanes and flyingboats. (Author, courtesy of Royal Institution of Naval Architects. International Conference. Wing-in-Ground-Effect Craft (London, December 1997).)

Ten passengers with baggage weigh roughly 1 ton. Such an aircraft should break even with around 60% payload. The total disposable load is nominally around 670 tons, about three times that of the Boeing 747-400, but with the ability to carry nearly 800 tons of fuel.

G.5.2 Alternative routes

If an aircraft can satisfy this OR, it can be used on almost any other route. South Africa could be reached by circumnavigating the coasts of France, Spain and West Africa. The Falkland Islands, from Capetown, are about 200 mm further than the 3000nm from London Heathrow to John F. Kennedy airport in New York.

Alternatively, turning east at Gibraltar, to run the 2000 nm of Mediterranean to Suez, there is a relatively narrow low-level strip of land paralleling the Canal, which could serve as the route to the Red Sea. From there it is sea all the way to India, the Far East or, again, South Africa (down the East African coast).

Crossing the North Atlantic, the eastern seaboard of the Americas, North and South, is open; while turning inland at the Bering Straits there are routes to the Eurasian heartlands.

G.5.3 Propulsion

The required thrust, which is equal to drag (resistance), is inversely proportional to [1/(L/D)]. Lift is equal to weight (displacement = 1500 tons). With an aspect ratio (wingspan^2/total wing area) of a little over 3, Hoerner's curve in Fig. 5.12(d) suggests that with an (L/D) between 20 and 30, the required thrust will lie between 1/20 and 1/30 of the weight, say between 50 and 75 tons, at cruise altitudes of 4 - 16m (13-52ft).

The installed thrust must be sufficient for the one engine failed case. Bird strikes, mentioned earlier, are a formidable hazard at low-level. The author has seen a swan tear the side out of a jet fighter on take-off. An albatross or a flock of smaller sea-birds will wreck an engine (a constant risk with Gooney birds on Midway Island in the Pacific). Therefore, it is better to have four engines instead of two. Then failure of one engine reduces thrust by only one-quarter instead of one-half.

Assuming a (lift/drag) of 20, four engines, generating 90,000 lbf (41 ton) per engine would be sufficient for the one engine-out condition. Engines in this class exist in the UK, but will need development to fit them for low-altitude operation, and protection from bird strikes.

G.5.4 Comparison of productivity and transport efficiency

Defining productivity as (payload X block speed), a ram-wing with three or four times the payload of a 747, flying at half the block speed while burning 25% more fuel, would have about double the productivity of the airliner. Its back-of-the-envelope advantage, which we shall call:

Transport efficiency = productivity / unit fuel consumed / nm

So that relative efficiency of (ram-wing) / (airliner) = (2/1.25)/1.0 = 1.6 = 160% (G-1)

Cruising at 250 knots the aim is for practical legs of 1400-4000nm plus reserves between refuelings, depending upon cruise altitude and payload/fuel load. The lower the aircraft flies, the longer the achievable legs, and the greater the risk of bird strikes.

Provided that specific fuel consumptions comparable with large airliners are possible, 1000 passengers, or 100 tons freight, might be delivered to Australasia from the UK for one-half to one-third the standard airline rate. Passengers would have more room and greater comfort than by conventional air transport but operational and logistical problems are great.

G.5.5 Conclusions

If on 17 December 1903 the bicycle-making Wright Brothers had been told: 'you have started something big, putting an engine into that flying-thing of yours', they might have doubted. It had no stability, only control. It needed a falling weight to accelerate it along a rail to flying speed. Power was needed to sustain flight which for economy of effort took place in surface (ground) effect. However, they had an aeroplane:

(1) Aeroplanes are heavier than air, mechanically power-driven and have wing surfaces fixed for flight. So, mechanically propelled surface-effect aircraft with wings are aeroplanes.

(2) Aircraft are subject to the Air Navigation Act and Air Navigation Order in the UK; which respond to the requirements of the International Civil Aviation Organization of the United Nations.

(3) Powered flight in surface effect involves the least mechanical effort. Therefore, such aircraft have useful potential, provided one can harness them to overcome operational difficulties.

(4) Development of high-thrust, low specific fuel-consumption engines, for flight at low altitude and airspeeds of 250 knots or more is needed now, if very large public-transport and cargo-carrying surface-effect aircraft are to become an economic reality within the next 20 years.

(5) High risk of engine failure at low altitudes, caused by bird-strikes, directs requirements towards separate propulsion and auxiliary lift engines.

(6) The bulk of UK investment and trade is on long-haul routes, over the horizon from the European Union. Therefore, that is where to look first when considering use of the air for long-range heavy-lift of passengers, freight and awkward loads.

(7) The nations of the Pacific Rim are most promising for economic development and trade over the next few decades.

(8) The shortest route to the Pacific Rim and Australasia from the UK is west of north, across the Arctic ice to the Bering Straits - a revived North West Passage.

(9) Such routing will involve extensive and expensive development of base and associated communications, loading and unloading, airfield, medical and engineering facilities.

(10) The author cannot envisage adequate regulation of large surface-effect aircraft by maritime Classification Societies and the IMO. They are far too complex and have a kinetic potential, arising from their flight characteristics, which is more adequately covered by the methods of existing aircraft safety regulation. There could be redundancy and waste through conflict between aviation and marine regulatory authorities.

(11) Even so, aircraft safety methods will need adapting for such operations, being inadequate by themselves. Therefore, the author sees the need for a separate Joint AeroMarine Safety Regulation Organization, to prepare the ground, with staffs combining both aeronautical and marine expertise.

Appendix H AeroShip (Heavy-Lift Delta- Wing for Disaster Relief)

This appendix casts the net wide deliberately, to stimulate you to explore and test new ideas, while demonstrating one example of doing so. Disaster relief is a serious requirement which will become even more so in the future. Mitigation and relief of disasters, both man-made and natural, through engineering is the reason for the existence of the multi-disciplinary Hazards Forum in London. It is an organization with which the author is much involved.

When a large-scale disaster occurs it inevitably stretches medical and hospital resources to the limit. In the past hospital ships have accompanied armed forces and been positioned as close as possible to adjacent war zones on many occasions. However, civil air hospitals have never been tried, as far as is known. The feasibility of bringing a complete working airborne hospital to the scene of a disaster, ready for immediate action, has maritime precedents and is of more than passing interest when faced with the ecological and other damage man is doing to the planet. The closest anyone has come to what we shall look at here is by using the Russian Ekranoplan, Spastel (Appendix G-3), for rescuing and treating survivors of an accident to a nuclear submarine.

Disasters on a large scale are inevitable, unfortunately. Earthquake and tidal wave, tempest, drought, disease, famine, brushfire and civil war, with accompanying increase in genocide of whole populations, happen regularly. Often airfield and adequate air traffic control facilities, if they exist, are denied for various reasons. Roads are destroyed, frequently isolating thousands of sick and injured survivors of a catastrophe. Maintaining the security of the hospital, its drug supplies and its services from terrorists and raiders is of paramount importance, one reason for keeping it out of reach in the air.

Further into the future is the problem of global warming, a consequence of carbon dioxide levels in the atmosphere, increased by one-third since the Industrial Revolution which began over 250 years ago. The burning of fossil carbon fuels, especially oil for ground and air transport, accelerates the rate of CO_2 contamination, while depleting the protective layer of ozone over the poles. In the Antarctic there is evidence of a rise in temperature of 2.5^0C in the past 50 years. If the western ice shelf continues to melt away entirely the forecast rise in world sea level will be 6m, about 20 ft. Such a rise will flood many coastal and other cities, including London and New York. Solar warming of now bare rock destroys glaciers and hastens the process. Double this and a 5^0C rise will melt polar ice in both the Arctic and Antarctic, raising sea levels by 60m or 200 ft, devastating populations, and causing predicted resource wars. The first of these is expected to result from drought, which has already started.

Our task is to draft a preliminary study of a long-range and endurance hospital 'AeroShip', which combines the properties of both a flying-wing and an aerostat, but which does not need as much ballast and weighing-off as an airship. The aim is to carry a military-standard in-flight field hospital with 200 beds, staff and equipment. It must have the potential to carry awkward loads, transferred by helicopter or light/small aeroplane, using a flight deck on its upper surface. The flight deck is connected by lift to the hospital and cargo area in the lower deck of the hull.

When dealing with aerostatic lift (lighter than air), the larger the aircraft the more lift it generates in proportion to scale cubed. Wetted area and skin friction drag rise as scale squared. Lift/drag of a shape with given profiles and proportions improves with increasing scale (Eqn (7-11)). This means that drag generated for a given lift varies in proportion to (1/scale).

The difficulty with airships is that of loading and unloading; the taking on and dropping of ballast; the discharge of excess (expensive) lifting gas as fuel is consumed; mooring; and the time taken for an operation. The AeroShip has the ability to adjust the lift more easily in the same way as any aeroplane, by a change in the angle of attack. There should be a saving of weight by eliminating the need for large quantities of unproductive ballast.

In theory, the combination of substantial aerodynamic and aerostatic lift (discussed in Section 7.7) promises heavier weight-lifting, increased capacity and higher productivity. High speed is not essential, as long as range is global and around the clock. Cruising continuously at 100k, or less, without stopping to refuel enables an AeroShip to cover 2400 nautical air miles in every 24 hours. The AeroShip could also reach the other side of the globe with an 880t payload in 5 days, by picking up tailwinds around the pressure systems at low altitudes, as practised by fuel-conscious skippers of jet airliners at high altitude. The Graf Zeppelin operated for 10 years without mishap in the 1930s, and crossed the Atlantic some 140 times, in all weathers, always on time.

Apart from disaster relief, there is the growing tourist industry. At least one chairman of a travel company is enthusiastic about cheap, slow and quiet travel for the masses, over game reserves and areas of great natural beauty, world-wide, including the Arctic and Antarctic. Shuttle service from flight-deck to ground would add to the experience. Assuming 10 passengers per ton, an 880 t payload represents 8800 western Caucasian passengers with baggage and more in parts of the world where many people are smaller and lighter! In practice accommodation and victualling would severely limit the actual number of passengers to be carried in acceptable comfort, and without risk of psychological stress caused by pressure of numbers.

H.1 Safety - and hydrogen in perspective

In terms of aviation safety, it is almost impossible to better the record of the airship, especially since helium has replaced inflammable hydrogen as the source of aerostatic lift. That should not exclude hydrogen, as we saw earlier, liquid hydrogen is now seriously considered as fuel for long-haul public-transport aeroplanes. It burns upwards, not downwards and sideways like heavier volatile substances.

To put hydrogen into perspective as a source of aerostatic lift. The pre-World War II German airship Hindenburg was forced to use hydrogen instead of helium because the USA, which produced helium in bulk, had regulations restricting its sale to foreigners. Loss of the Hindenburg is a race-memory among journalists, who cannot avoid mentioning it - like reporting the launch of a new ocean liner, followed in the same breath by reference to the loss of the Titanic. Mention an airship project, and back will come the comment, relevant or not, that the Hindenburg was destroyed in a hydrogen fire when approaching to land at Lakehust, New Jersey on 6 May 1937. However, unlike a modern airliner, only 36 of the 97 on board died, most of them through jumping too soon. Oddly, that is rarely if ever mentioned.

The cause of the fire has been a source of speculation for the past 60 years, until a recent report carried in the London Times of Monday 12 May 1997. Research by Addison Bain, the former head of the NASA hydrogen program at the Kennedy Space Centre in Florida, and Richard van Trueren, a space shuttle engineer, is quoted as finding that the fabric of the airship and its waterproof lacquer coating were to blame. The materials used for doping the fabric silver contained powdered aluminium (used in space shuttles) and a cellulose nitrate (used to make explosives). Pieces of fabric retrieved as souvenirs, or as evidence from the Hindenburg, did not self-extinguish but continued to burn once ignited.

Static electricity from a passing thunderstorm was present in the atmosphere at the time of the disaster. When a charge of static electricity encountered a test sample of the original envelope at right angles, it simply burnt a hole. When the charge hit the fabric tangentially it ignited.

H.2 Configuration

The shape, shown in Fig. H.1, has a 'Gothic'-delta planform which is capable of generating more aerodynamic lift than the conventional streamlined airship. Being a delta it is broader but shorter in length than a solid of revolution containing the same volume.

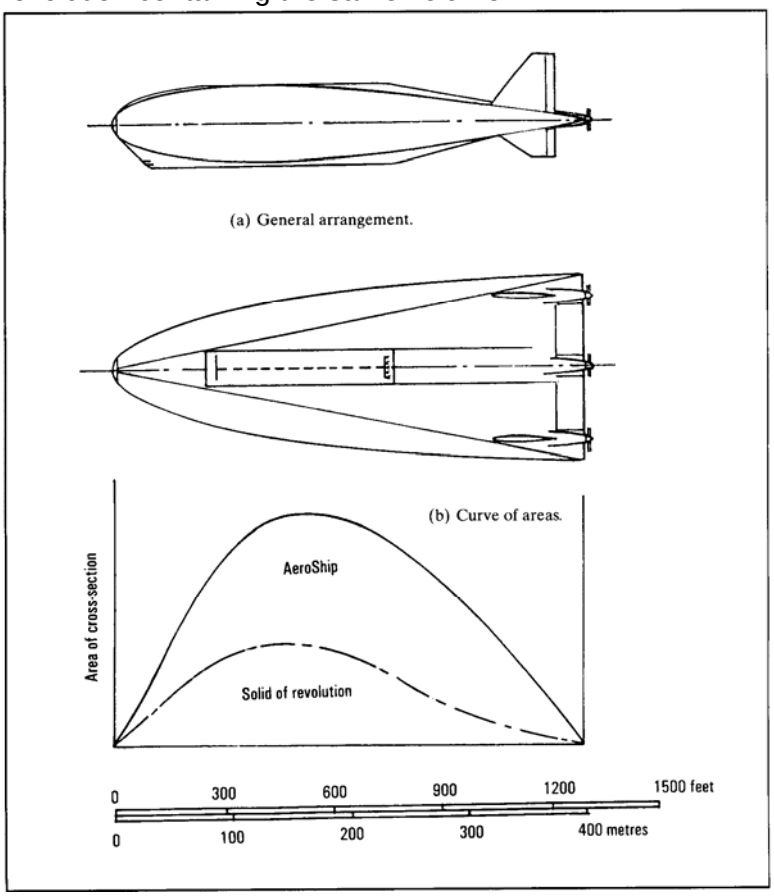

Fig. H.1 Hybrid AeroShip design study for disaster relief, carrying 800 ton field hospital and staff. Aerodynamic plus static lift, enables loads to be transferred in flight by helicopter and light aircraft, without discharging ballast. The table compares lift and range with different forms of propulsion.

Often one has to hunt around for the means of dealing with new ideas. They involve approximations and may call upon other disciplines, in this case Naval Architecture: buoyancy, displacement volume,

displacement (equivalent to gross weight and total lift), block coefficient and wetted area:

Block coefficient, C_B = immersed volume of body/volume of enclosing box (H-1)

In the case of a streamlined solid of revolution, like the hull of a conventional airship, the enclosing box has a length equal to the length of the hull and a rectangular cross-section the sides of which are each equal to the hull diameter. For such a solid of revolution $C_B \sim 0.5$ (for example, the block coefficient of a sphere is 0.524). The wetted area of the streamlined solid of revolution is given by

Wetted area, $S_W = \pi$ (side area of hull) = π (2/3(L/D)) (H-2)

Knowing this and armed with Fig. 6.2 for those portions of the body which are less amenable to treatment as solids of revolution, we may analyze approximately but well enough for our purposes the properties of the shape of the aircraft.

Starting with the operational requirement for the ship to carry within its hull a mobile field hospital of 200 beds, and to have global range and endurance, we need to know the weight of the hospital, its volume and the forms of propulsion available. Table H-1, from a paper by the author in 1970, shows that nuclear or solar power, or a combination of both, is needed for long range and endurance without the need for normal refueling. The average useful lift (payload, near enough) is then about 50%, which makes the total weight of the ship - its displacement in air - twice the weight of the hospital, its staff and equipment plus 200 casualties. There is a weight fraction of around 10% for systems and ballast. A shape needing less ballast than an airship gives us some freedom to maneuver in our estimates.

Table H-1 Approximate effects of different forms of propulsion upon useful lift and range of a large airship or hybrid

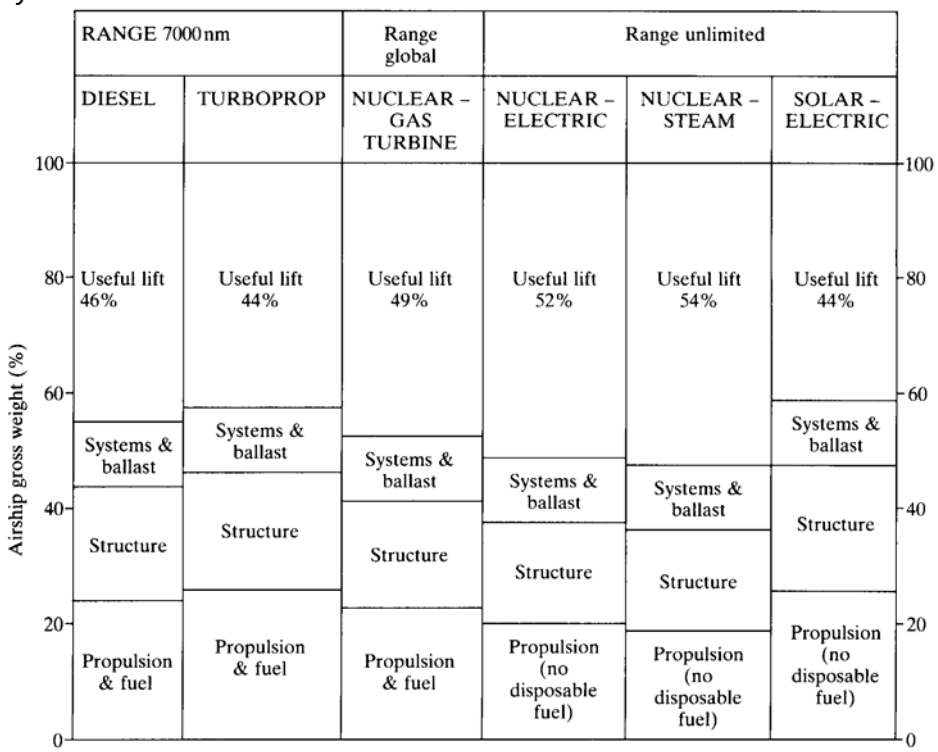

For propulsion turboprop units are not excluded. However, one then has to face the logistical problem of positioning fuel where it can be reached and uplifted to the ship using the on-board helicopter, when disaster has destroyed the infra-structure on the ground. The AeroShip has to be freed from the ground and the disaster area.

H.2.1 Units

Units have been mixed deliberately because, for the reason given much earlier, there is a need for aeronautical engineers to be ambidextrous when handling them in a world which has extensive mixed American and metric markets, which use both systems. Here, metric units are used primarily in the calculations which follow. Being larger than either pounds weight or feet, large quantities are numerically easier to manipulate.

H.2.2 Deadweight tonnage

We are dealing with a ship-sized aircraft and it is convenient to use the mariner's concept of deadweight, which in aeronautics is more or less the disposable load. It is the weight of the hospital and its equipment, casualties, crew, fuel and water: in short, the weight of all expendable or removable items on board. The hospital requires 506 medical staff. The weight of equipment is equivalent to 12 - 15 tons for each of 54 standard international (ISO) containers (5.87m long, 2.31 m wide and 2.197m high = 29.8 cubic meters). Assuming 10 persons weigh 1 ton and each container represents an average of 13.5 t of equipment:
XXX

54 x 13.5	=	729 t
54 X 29.8m^3	=	1429m^3 (50466 ft^3)
506 staff	=	50 t
200 casualties	=	20 t
Hospital total	=	799, say 800 tons
Helicopter + fuel and spares	=	50 t
Consumables	=	100 t
W_P		950 tons

In aeroplane terms we shall regard this as the payload, so that deadweight represents W_P plus crew, fuel, oil, movable ballast and casualties.

A flight-deck, lift and hangarage for the helicopter are counted as part of the structure weight.

H.2.3 First estimate of length and displacement

This first estimate is deliberately incomplete, because it only takes into account the geometry of the basic hull of the AeroShip: the lifting volume, length, span and wing area, using the parametric formulae devised for the purpose. Later, we discuss the effect of operating altitude upon the pressure and expansion of the helium contained. This must be accommodated by fitting ballonets: air bags freely venting to atmosphere, the shape of which is maintained by air scooped into them dynamically in flight, or by pumps. For this the volume must be increased.

Having calculated W_P, representing the useful lift in Table H-1, which for unlimited range averages 50% of the gross weight, or total displacement of the hull, the total lift is 2 X 950 = 1900t. It is not intended that the hospital will be transferred to the ground, for reasons of security. Small elements might be transferred, but the bulk will remain on board, in flight, with personnel and casualties shuttling between the ground and the ship. This is the main reason for an on-board helicopter (assumed to be in the Boeing Chinook class).

The delta-wing shape and proportions can be handled as a naval architect would, using, length, L; beam (span), B = m L; and draught (depth, immersed in air), D = n L, to calculate the displacement, wetted area and length. The proportions shown in Fig. H.1, assume values of m = 0.4 and n = 0.16 (equivalent to the thickness ratio of an aerofoil section), all based upon a split solid of revolution and rectangular sections between. The payload weight fraction (W_P / W_0) = useful lift/gross weight (lift) = f_P = 0.5, and we make the following approximations, which are in two parts. The first, involving m, are functions of the rectangular centre-sections joining the split solid of revolution. The second, involving n, are functions of the solid of revolution itself:

Displaced volume, $\nabla = L^3(0.33m + 0.5n) = 0.034L^3$ (H-3)

As lift of helium and = 1.04 t/1000m^3 (H-3a)

Displacement, $\Delta = W_0 = V\left(\frac{1.04\,t}{1000}\right)t$ (H-4)

then knowing:

$2W_P = 2f_P\,W_0$ (H-4a)

we use Eqns (H-3a) and (H-4):

$$\nabla = \frac{1900}{\left(\frac{1.04\,t}{1000}\right)} = 1827\,x\,1000\,m^3 = 0.034L^3$$

Therefore, the length of the AeroShip is

$$L = \sqrt[3]{\left(1827\,x\,\frac{1000}{0.034}\right)}m = 377m(1238\,ft) \qquad \text{(H-5) (H-5a)}$$

This result can be obtained in another way, using the same configuration, but basing it upon the payload weight, or the payload fraction and gross weight:

Length, $L = 38.4\ (\sqrt[3]{W_P})$m (H-6)

$= 38.4\ \left(\sqrt[3]{f_P\ W_0}\right)$m (H-7)

which, as W_p. = 950 t:

= 377m (1238ft) (H-5a)

so, from Eqn (H-3a):

Volume, $\nabla = 0.034\ L^3 = 1{,}821{,}810\ m^3$ (H-3b)

H.2.4 Revised estimates

The first estimate assumed that every corner of the hull is full of helium, which is impossible. It is better at the project stage to add, say, 10% to the displaced volume by factoring Δ by 1.1 in Eqn (H-3b), and then taking the cube root to obtain a new length:

$1.1\nabla = 1.1 \text{x}\, 1{,}821{,}810 = 2{,}003{,}991$

$$L = \sqrt[3]{\left(\frac{2{,}003{,}991}{0.034}\right)} = 389\text{m}\left(1{,}276\ \text{ft}\right) \quad \text{(H-3c)}$$

which is, near enough, $(\sqrt[3]{1.1})$ x 377m, because $\sqrt[3]{\text{volume}}$ = length.

Turning now to our original proportions and inserting the new length of 389m:

Span of delta planform, B = m L = 0.4L = 156m (510 ft) (H-8)

Draught (depth from flight deck to keel) = 0.16L = 62m (204 ft) (H-9)

Hull block coefficient, $C_B = 2{,}003{,}991\ m^3/(389 \times 156 \times 62)m^3$

= 0.54, which is an increase of 6% over that of a (H-10) solid of revolution having the same profile

Wetted area, $S_W = L^2(2.12m + 2.09n)m^2$ (H-11)

$= 1.18\ L^2 = 1.18 \times 389^2 = 178{,}558m^2\ (1{,}921{,}284\ ft^2)$ (H-11a)

which is 3·52 times the wetted surface area of the solid of revolution element in Eqn (H-11). This is an indicator of the likely increase in drag over an airship having the same side view and area.

Planform (wing) area, $S = L^2(0.5m + 0.06n) = 0.31\ L^2 = 0.31 \times 389^2$ (H-12)

$= 46{,}910\ m^2\ (504{,}746\ ft^2)$ (H-12a)

Aspect ratio, $A = m^2/(0.5m + 0.66n) = (0.4)^2 / (0.2 + 0.11)$ (H-13)

= 0.52 (H-13a)

The wing with an aspect ratio of 0.52 has a lift slope, dC_L/d_α:

$$\alpha_A = \frac{\pi A}{2} \quad \text{(H-14)}$$

$= 0.82^c = 0.014$/degree (H-14a)

At a cruising speed of 100 KEAS, the dynamic pressure q ~ 35 lb/ft^2, so that the lift increment generated in tons/degree change in angle of attack, α, and working in FPSR (knowing that there are roughly 2200 lb in 1 ton) is

$\Delta L = C_L\ q\ S = 0.014 \text{ X } 35\ lb/ft^2 \times 504{,}746\ ft^2$ (H-15)

= 247,326/2200 = 112 t (H-15a)

This means that a change in angle of attack of 1^0 at cruising speed generates enough dynamic lift to dispense with 161 tons of ballast. A Chinook helicopter, fully laden, weighs about 24.5 t, so that there is ample aerodynamic lift in hand for it to land and take off again, the change in weight being catered for by a slight change in angle of attack, without the need to dump ballast.

H.3 Power requirements

The 7,062,100 ft^3, 804 ft long Hindenburg appeared to need about 23.5 bhp/t at 80 knots. The AeroShip has 3.52 times the wetted area of a solid of revolution of the same length and section fineness ratio as itself, but it is 159 times the size of Hindenburg in scale. We saw earlier that (D/L) is inversely proportional to scale and

that power required is proportional to (drag X cruising speed). So, as a very crude estimate the power required by the AeroShip when cruising at 100 knots, instead of the Hindenburg's 80, could be around

(23.5 bhp/t) x (3.52) x (100/80) x (1/1.59) = 65.03 bhp/t

Power required for Δ = 1900t = 65.03 X 1900 = about 123,560 BHP or 92,176 kW (H-16)

This would require, say, 22 turboshaft engines, with maximum continuous transmission ratings of 4970shp (3706kW), rotorprops of 11.58m (38ft) diameter, and disc-loadings of 5.2shp/ft^2 (41.7 kW/m^2). Alternatively, ten Russian Kuznetsov turboprops of 14795 eshp, with contra-rotating reversible-pitch propellers could be used. Range would be less than global, with refueling and retrimming. Thus an important part of the requirement could not be satisfied.

H.3.1 Nuclear propulsion

As the requirement is for global range, nuclear propulsion is as feasible as for a nuclear submarine, using nuclear-electric or nuclear-steam propulsion. In spite of public anxiety about things nuclear, there is no risk of producing CO_2, which has caused ecological problems.

Assuming nuclear engines are each capable of producing around 47,000 shp, three would suffice. However, using the same disc-loading, each of three rotorprops would be 117 ft (35.6m) in diameter. To avoid compressibility effects, rotor-tip Mach numbers > 0.6 must be avoided, which would limit rotors to about 108 rpm. This means a heavy reduction gear between the turbine and rotor shaft.

The alternative is to use the engines as separate sources of steam or electric power, which is then distributed to a number of individual turbines or electric motors around the AeroShip. Assuming the same disc-loading as before, the number of rotorprops required would be 28-30. The steam or electric power lines would run inside the hull, to vectoring rotors on cantilever mountings outside, for maneuvering at low airspeeds, and holding station.

There are two kinds of nuclear powerplant which might be applied to AeroShip propulsion. The first is the pressurized water reactor (PWR), which is well proven in use by both the United Sates Navy and the Royal Navy. It is described as being 'elegantly simple' by Compton-Hall (1988) in his book *Submarine versus Submarine*. The reactor compartment is shielded by lead and polythene, which accounts for one-quarter to one-third of the powerplant weight. Operation of a PWR absorbs high auxiliary power, needed to operate circulation pumps in the cooling system. It tends to be noisy.

The second is the liquid-metal-cooled reactor using molten sodium, which is more efficient than water. Sodium has to remain molten at all times. If it solidifies there is a risk to the pipes in the primary cooling circuit. Heat from the liquid sodium is used to generate superheated steam, which produces power by exhausting through a turbine. It is quieter than a PWR and more compact, but thermal stresses are high. The temperature lapse rate with increasing altitude would mean special attention being paid to protect an airborne liquid-metal-cooled reactor. However, the order of magnitude of the engineering solution is unlikely to be worse than that encountered in a submarine, operating in cold ocean water.

Engineering of a high quality would be needed to avoid losses, and fatigue fracturing of steam pipes. Ease and frequency of safety inspections would be important operationally. Special protective lagging would be needed to avoid cooling of superheated steam being conveyed between the engine and the turbines driving the proprotors. The sheer size and quantity of helium would assist lagging, because of the ratio of surface area/unit volume decreasing with scale. There could be a gain in lift by consequent heating of the air and helium contained within the envelope.

H.3.2 Solar power

There is a considerable advantage to be gained by fitting the AeroShip with solar-power cells, which also produce no damaging CO_2. As we saw in Section 7.2.7, solar-electric power requires no separate fuel, beyond incident rays of sunlight. Therefore, power output would be susceptible to season, weather, latitude and night flying. However, assuming favorable conditions, and given:

The total wetted area of hull, S_W = 178,558 m^2 (1,921,284 ft^2) (H-11a)

The upper half for solar cells = 89,279 m^2 (960,642 ft^2) (H-11b)

which, as we saw in Section 7.2.7, will produce

0.015 bhp/ft^2 (0.12 kW/m^2) = 14,409 bhp (10,749kw) (H-17)

Thus, a power unit with an efficiency of 80% would produce

0.8 X 14,409 bhp = 11,527 shp (8,600 kw) (H-17a)

This represents only 9.4% of the power needed to propel the AeroShip. While inadequate for propulsion alone, it is ample for electrical needs, maneuvering and driving thruster units to assist maneuvering at low forward

speeds.

Solar panels are 2cm by 2cm, weight 0.28g, and would add 0.7 kg/m^2. Using Eqn (H-11b) the weight penalty of covering the upper surfaces of the ship with solar cells is

$$89{,}279\ m^2 \times 0.7kg = 62.5\ t \quad \text{(H-17c)}$$

or a little over 3% of the displacement.

H.4 Summary

From these brief calculations, and knowing what we do of modern aeronautical practice, an AeroShip is feasible. Nuclear propulsion is also feasible, as aerostats are much safer than aeroplanes. The AeroShip appears to combine the technical benefits of both, without their more severe disadvantages.

However, one problem with disaster forecasting is that there is always the optimist who, rightly or wrongly, predicts the forecast to be worse than the reality: 'Anyway, it can't happen to me, or us, therefore do less, rather than more'; 'After all, even though it has happened before it is not likely to happen again for tens, hundreds or thousands of years. Anyway, mankind is improving, isn't he?'. However, political turbulence increases and continuing events give no cause for being sanguine about a peaceful future. Resource wars are now forecast as the biomass of humanity increases while resources diminish.

Volcanoes and changing weather patterns suggest that something beyond our powers is going on. Global warming is melting ice, for example, and changing the course of ocean currents, which changes weather patterns and climate: the sea is all powerful. This in turn can cause mini-ice-ages in some parts of the world, and warmer climates in others. For example, in the late 1990s, *El Nino*, a current of 2^0C warmer water in the central Pacific, is growing in extent and global changes in climate and intense disturbances of the weather are associated with it.

Although a hospital AeroShip is technically and operationally feasible, sheer size and lack of agility is an obstacle to other air traffic, making the aircraft, which is nearly three-fifths as long again as the German Hindenburg of the mid-1930s, unwelcome near terminal areas of busy airports. Use of nuclear power, especially over land, will be objected to by political pressure-groups, even though a helium-filled ship is far safer than any aeroplane, and it generates no damaging CO_2. The only way to deal with such criticism is by education and tightly regulated safety procedures. These procedures are based upon airworthiness and operational requirements and they take a long time to write, because of the legal implications.

Aerodynamic control is by twin fins and rudders, with elevators at the wing trailing edge which also function as ailerons. All are driven by high-order control systems, with computers and FBW or FBL, as are the engines and thruster units.

The ship cannot be filled with helium on take-off. We allowed 10% additional volume when making a second estimate of length and displacement. There must be space into which the gas can expand as height is gained. By 10,000 ft nearly one-third extra volume is needed, not merely 10%. Ballonets (bladders of air, which is free to flow in and out of them with changing ambient conditions and altitude) are needed to stabilize the gas bags, preventing them flopping about and chafing, causing leaks. The design altitude with a quantity of non-expendable gas on board fixes the required displacement, which in turn determines the length and other scantlings of the hull. To operate over Central Africa, for example, 5,000 ft above ground level, requires the ship to reach at least 10000 ft above mean sea level, give or take changes in ambient pressure. About one-third more volume is needed than we have calculated, to cope with expansion of the helium with falling ambient pressure. This will make the AeroShip at least 10% larger in all dimensions (Eqn (H-3a)). Thus, more iterations are needed, before displacement, scantlings, power requirements and costs can be optimized.

As almost half the weight (displacement) is payload, then one has to cope with trimming an aircraft which, with all payload removed would be 800 t lighter than when fully laden. What then is to be done about the amount of lifting gas on board? It is too valuable to be vented to the atmosphere as payload is discharged. As a temporary measure, a change in angle of attack of a little under -10^0 should generate this amount of downward lift, until a large and capable cryogenic system liquifies the helium into tanks. However, this change in α^0 will necessitate stowage or tying down of loose articles. The system of solar cells should be an adequate source of electrical power for the necessary refrigeration of the helium.

What of operational and logistic problems with an aircraft 0.2 nm in length which, after launching, might not return but remain in flight for months? Where might it loiter (or park) in sovereign airspace around the world, awaiting an emergency?

Knowing that a hospital AeroShip with drugs on board would make an attractive target-of-opportunity for helicopter or other form of airborne attack, there should be provision for armament around the flight-deck area at least. There must also be the ability to seal off the ship when required.

Modern carbon-fiber composites and other materials were not around when the Hindenburg flew. Aero-marine technology would have a fundamental part to play, enabling lighter and more efficient structures to be built. However, access for inspection of structure, solar panels and remaining skin is needed, to keep

such an aircraft in a good state of in-flight repair. This is a major problem.

How many AeroShips would be needed world-wide? Who would bear the cost? There might be some scope in a defence budget, because they could also be used to carry early-warning equipment internally. They would be hard to shoot down in a war-zone, taking perhaps several days to descend to earth, as happened when blimps used on convoy patrols were damaged by gunfire in World War II.

Technically, although the construction and operation of AeroShips is feasible, the space and hangarage needed would be the equivalent of a very large shipyard. The cost of investment in the necessary facilities would be enormous, in the absence of significant commercial production. Construction would have to be on a multi-national basis, probably under the aegis of the United Nations. Fortunately disasters are infrequent enough, while at present climate and change of sea level is slow, so that there is a case for the manufacturing and logistic costs of only one or two AeroShips to be shared on an international basis.

There is always the growing market for tourists, from which such an aircraft might be hired when needed. The major obstacle, over and above size and scale of investment, is public perception of the hazards surrounding nuclear propulsion, even though here it appears to be the least limiting option, and probably the safest. It would cause anxiety for any civil authority asked to certificate the aircraft for public transport operations, and also for those tasked with insuring it. Yet, the paramount long-term requirement it seeks to satisfy cannot be shrugged aside indefinitely; there is no sign of it retreating.

References and Further Reading

Aerodynamics (a Series of papers revised and reprinted from 'research'), Vol. 10 (1957). Antonov, V., Gordon, Y., Gordyukov, N., Yakovlev, V., Zenkin, V., Carruth, L. & Miller, J. (1996) OKB Sukhoi - A History of the Design Bureau and its Aircraft. Leicester: Midland Counties Publications; and Stillwater, MN, USA: Speciality Press.

Ashford, D. and Collins, P. (1990) Your Spaceflight Manual. London: Headline Book Publishing.

Babister, A. W. (1961) Aircraft Stability and Control. Oxford: Pergamon Press.

Barnett-Jones, F. (1994) TSR-2 Phoenix or Folly? Peterborough: GMS Enterprises.

Bevan, T. (1954) Theory of Machines. London: Longman.

Bradshaw, P. (1964) Experimental Fluid Mechanics. Oxford: Pergamon Press.

Brooks, P. W. (1962) The World's Airliners. London: Putnam & Co.

Butowski, P. & Miller, J. (1991) 0KB MiG - A History of the Design Bureau and ifs Aircraft. Leicester: Midland Counties Publications; and Stillwater, MN, USA: Speciality Press.

Chubikov, V., Pashin, V., Treshchevsky, V. & Maskalik, A. (1991) Ekranoplan: A High-Speed Marine Vehicle of a New Type. Proceedings from the First International Conference on Fast Sea Transportation. Trondheim, Norway: Tapir Publishers.

Compton-Hall, R. (1986) Submarine Warfare Today and Tomorrow. London: Michael Joseph.

Compton-Hall, R. (1988) Submarine versus Submarine. London: David & Charles.

Corning, G. (1953) Supersonic and Subsonic Airplane Design. Ann Arbor, Michigan: Edward Brothers Inc.

Coultas, H. W. (1957) Theory of Structures. London: Pitman.

Cutler, J. (1992) Understanding Aircraft Structures. Oxford: Blackwell Science.

Feather, N. (1959) Mass, Length and Time. London: Penguin Books.

Flight Handbook - The Theory and Practice of Powered Flight (1962). London: Iliffe Books.

Gates, S. B. (1940) Longitudinal Stability and Control (a Simple Exposition of the Fundamentals Employed in this Aspect of Design). London: Aircraft Engineering (journal).

Green, W. The Observer's Book of Aircraft (Series). Frederick Warne & Co. Hoerner, S. F. (1965)

Fluid-Dynamic Drag. Bricktown: P0 Box 342, NJ 08723, USA.

Hoerner, S. F. (1975) Fluid-Dynamic Lift. Bricktown: P0 Box 342, NJ 08723, USA.

Huenecke, K. (1984) Modern Combat Aircraft Design. Shrewsbury: Airlife Publishing. (Translated 1987.)

Jane's All the World's Aircraft (Annual). Coulsdon, Surrey; Jane's Information Group.

Irving, C. (1993) Wide-Body - The Making of the 747. London: Hodder & Stoughton.

Jimenez-Garzon, A. (1996) EF2000 Aerodynamics and Structure. Paper S468/002/96. London: Institution of Mechanical Engineers Seminar Publication.

Jones, R. T. (1990) Wing Theory. Princeton: Princeton University Press, NJ, USA.

Kendal, E. R. (1984) Performance Trades of Two-Surface and Three-Surface Configurations. Paper 84-2221. Washington DC: American Institute of Aeronautics and Astronautics.

Kuchemann, D. (1978) The Aerodynamic Design of Aircraft. Oxford: Pergamon Press.

Martinov, A. K. (1965) Practical Aerodynamics. Oxford: Pergamon Press.

Nickel, K. & Wohlfahrt, M. (1990) Tailless Aircraft in Theory and Practice. London: Edward Arnold, Hodder Headline Group. (Translated by E. M. Brown.)

Pace, S. (1992) Lockheed Skunk Works. Osceola, WI, USA: Motorbook International.

Ramsden, J. M. (1994) Towards the Megajet (edited reprint of Handley Page lecture). Aerospace, Vol. 21, No. 8. London: Royal Aeronautical Society.

Raymer, D. P. (1989) Aircraft Design: A Conceptual Approach. Washington DC: American Institute of Aeronautics and Astronautics.

Rozhdestvensky, K. V. (1996) Ekranoplans - The GEMS of Fast Water Transport. Preprint, 12 November 1996. London: Institute of Marine Engineers.

Scorer, R. S. (1958) Natural Aerodynamics. Oxford: Pergamon Press.

Seckel, E. (1964) Stability and Control of Airplanes and Helicopters. London: Academic Press.

Stinton, D. (1970) A new look at airships. Flight International, 19 November 1970.

Stinton, D. (1983) The Design of the Aeroplane. Oxford: Blackwell Science.

Stinton, D. (1995) Aiming for Mach numbers beyond 0~5 on water. Royal Institution of Naval Architects International Symposium on High Speed Vessels for Transport and Defence, 23- 24 November 1995, London.

Stinton, D. (1996) Flying Qualities and Flight Testing of the Aeroplane. Oxford: Blackwell Science.

Stinton, D. (1997) Heavy, Long-haul operations using the air-sea interface. Royal Institution of Naval Architects International Conference on Wing-in-Ground-Effect Craft, 4-5 December 1997, London.

Symposium on Supersonic Engineering, Royal College of Advanced Technology, Salford, May 1961. London: Heinemann.

The Journal of the American Institute of Aeronautics and Astronautics.

The Journal of the Royal Aeronautical Society.

The Royal Aeronautical Society (1952) Handbook of Aeronautics No. 1 - Structural Principles and Data. London: Sir Isaac Pitman & Sons.

The Royal Aeronautical Society (1952) Handbook of Aeronautics No. 2- Component Design. London: Sir Isaac Pitman & Sons.

Whitford, R. (1987) Design for Air Combat. London: Jane's Publishing.

Wood, D. (1975) Project Cancelled - A Searching Criticism of the Abandonment of Britain's Advanced Aircraft Projects. London: Macdonald & Jane's.

Wood, D. (1986) Project Cancelled - The Disaster of Britain's Abandoned Aircraft Projects. London: Jane's Publishing.

Wood, K. D. (1963) Aerospace Vehicle Design Volume 1, Aircraft Design. Boulder, Colorado: Johnson Publishing Co.